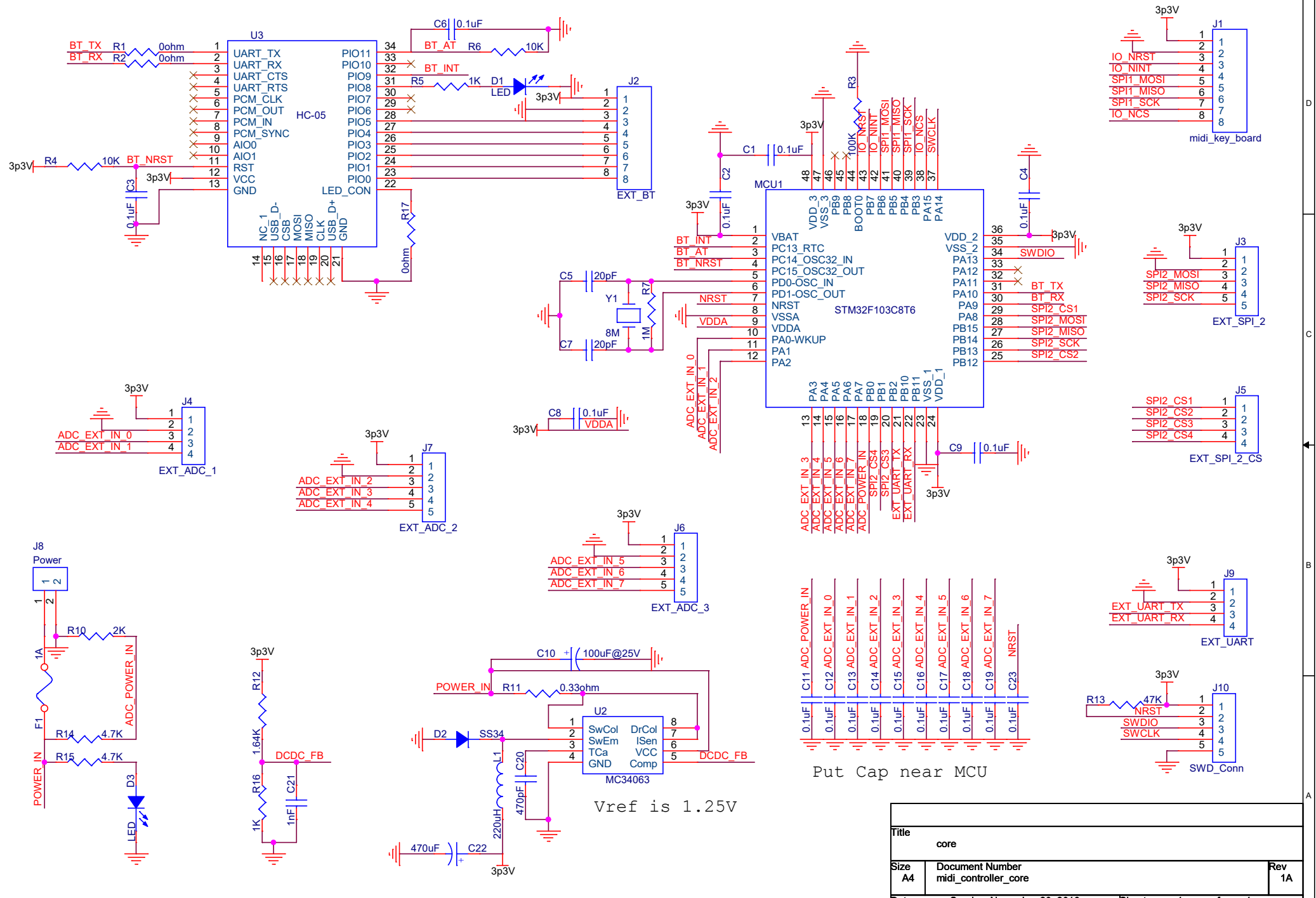
U3
HC-05
UART_TX
UART_RX
UART_CTS
UART_RTS
PCM_CLK
PCM_OUT
PCM_IN
PCM_SYNC
AIO0
AIO1
RST
VCC
GND
PIO11
PIO10
PIO9
PIO8
PIO7
PIO6
PIO5
PIO4
PIO3
PIO2
PIO1
PIO0
LED_CON
NC_1
USB_D-
CSB
MOSI
MISO
CLK
USB_D+
GND
BT_TX
BT_RX
R1 0ohm
R2 0ohm
R4 10K
BT_NRST
3p3V
C3 0.1uF
C6 0.1uF
BT_AT
R6 10K
BT_INT
R5 1K
D1 LED
R17 0ohm
J2
EXT_BT
MCU1
STM32F103C8T6
VBAT
PC13_RTC
PC14_OSC32_IN
PC15_OSC32_OUT
PD0-OSC_IN
PD1-OSC_OUT
NRST
VSSA
VDDA
PA0-WKUP
PA1
PA2
VDD_2
VSS_2
PA13
PA12
PA11
PA10
PA9
PA8
PB15
PB14
PB13
PB12
PA3
PA4
PA5
PA6
PA7
PB0
PB1
PB2
PB10
PB11
VSS_1
VDD_1
VDD_3
VSS_3
PB9
PB8
BOOT0
PB7
PB6
PB5
PB4
PB3
PA15
PA14
R3 100K
IO_NRST
IO_NINT
SPI1_MOSI
SPI1_MISO
SPI1_SCK
IO_NCS
SWCLK
SWDIO
BT_TX
BT_RX
SPI2_CS1
SPI2_MOSI
SPI2_MISO
SPI2_SCK
SPI2_CS2
C1 0.1uF
C2 0.1uF
C4 0.1uF
C5 20pF
C7 20pF
Y1 8M
R7 1M
C8 0.1uF
VDDA
C9 0.1uF
ADC_EXT_IN_0
ADC_EXT_IN_1
ADC_EXT_IN_2
ADC_EXT_IN_3
ADC_EXT_IN_4
ADC_EXT_IN_5
ADC_EXT_IN_6
ADC_EXT_IN_7
ADC_POWER_IN
EXT_UART_TX
EXT_UART_RX
J1
midi_key_board
J3
EXT_SPI_2
J5
EXT_SPI_2_CS
J4
EXT_ADC_1
J7
EXT_ADC_2
J6
EXT_ADC_3
J9
EXT_UART
J10
SWD_Conn
R13 47K
J8
Power
R10 2K
R14 4.7K
R15 4.7K
F1 1A
D3 LED
R12 1.64K
R16 1K
C21 1nF
DCDC_FB
C10 100uF@25V
POWER_IN
R11 0.33ohm
U2
MC34063
SwCol
SwEm
TCa
GND
DrCol
ISen
VCC
Comp
D2 SS34
L1 220uH
C20 470pF
C22 470uF
C11 ADC_POWER_IN
C12 ADC_EXT_IN_0
C13 ADC_EXT_IN_1
C14 ADC_EXT_IN_2
C15 ADC_EXT_IN_3
C16 ADC_EXT_IN_4
C17 ADC_EXT_IN_5
C18 ADC_EXT_IN_6
C19 ADC_EXT_IN_7
C23 NRST
0.1uF
Put Cap near MCU
Vref is 1.25V
Title
core
Size
A4
Document Number
midi_controller_core
Rev
1A
Date:
Sunday, November 20, 2016
Sheet
1
of
1