Project Portfolio – Noa Žuvela

Autonomous Robot-Based Testing System (Master Thesis currently in progress)

Development of a fully autonomous end-of-line testing system for joystick validation using a robot arm, computer vision, and AI. The system is designed to enable fully automated testing without operator intervention, where changes in joystick layout or functionality do not require manual reprogramming. Instead, the system detects functional elements using computer vision, computes their spatial coordinates, and utilizes an LLM-based decision module to generate the corresponding robot execution code.

Role

Responsible for the design and development of the complete system, including automation architecture, robot integration, and AI-based decision-making. Worked across the full pipeline, from perception and data processing to control logic and execution, ensuring seamless interaction between system components.

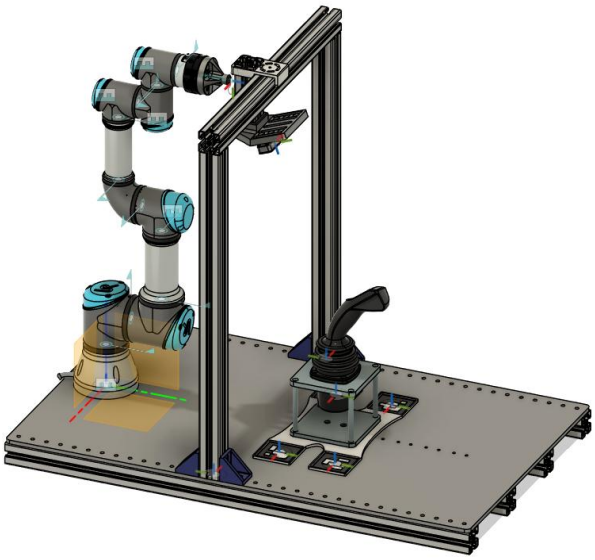

Figure 1: Full Assembly

Figure 2: Physical setup

Technical Contributions

- Robot arm programming and integration for automated interaction with joystick interfaces
- Integration of computer vision models for detection and localization of functional elements
- Development of automated test sequences based on dynamically generated input from AI modules
- Implementation of data acquisition and analysis pipelines for evaluation of system performance
- System-level integration of perception, decision-making, and actuation into a unified autonomous workflow
- Technologies: Python, Computer Vision, Robot Programming (UR), AI/LLM Integration, Embedded Systems, Automation

Outcome

Developing a fully autonomous testing system capable of generating robot execution logic dynamically from visual input, significantly reducing manual programming effort and improving testing flexibility and scalability across varying joystick configurations. The system demonstrates robust integration of perception, decision-making, and actuation in a real-world industrial setting.

Figure 3: View of pressing motion

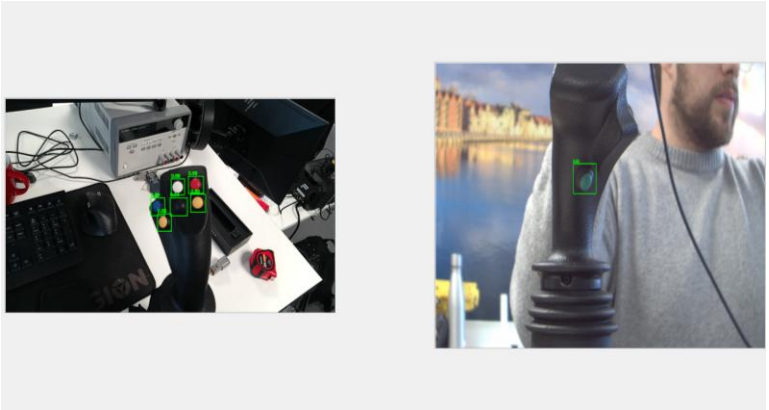

Figure 4: Example of detection

Roll-to-Roll Droplet Deposition & AI Monitoring System

University research project focused on the automation and monitoring of a roll-to-roll (R2R) material deposition system. The objective was to develop a system capable of dispensing droplets at controlled sizes and rates in a predefined grid pattern, while enabling real-time feedback on droplet shape, size, and placement during operation.

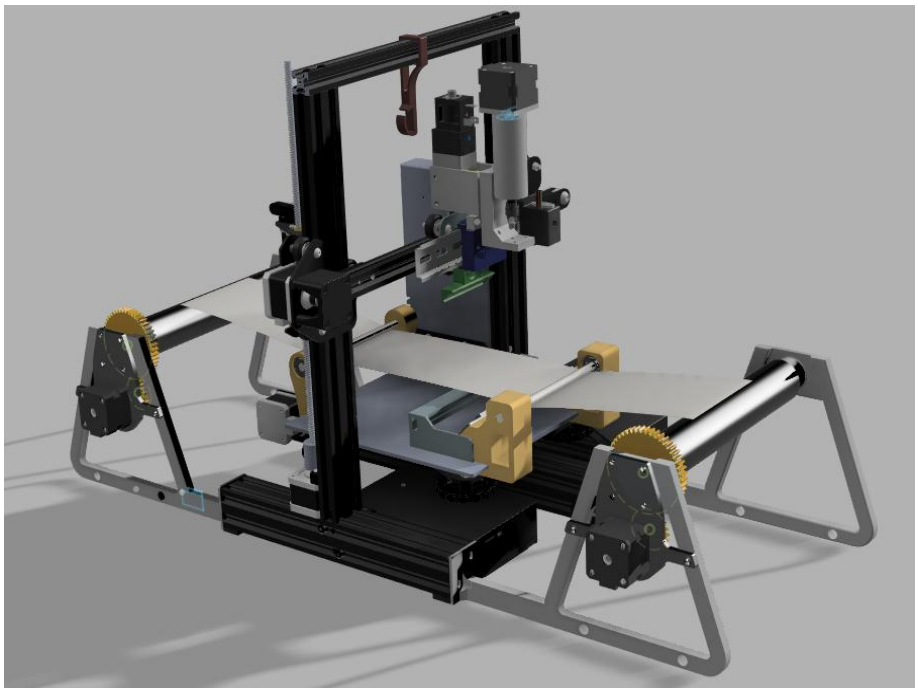

Figure 5: R2R Full Assembly

Role

Focused on the development of the droplet detection principle and the AI-based detection system. In addition, contributed across multiple aspects of the project, including system design, additive manufacturing of components, and programming, supporting overall development and integration of the platform.

Technical Contributions

- Technologies: Arduino, Embedded Systems, Computer Vision, Python, Image Processing, Mechanical Design
- Development of embedded control system using Arduino for low-level actuation and timing-critical operations
- Implementation of synchronized motion control between subsystems to ensure consistent and repeatable operation
- Design and implementation of a computer vision pipeline based on optical distortion detection for identifying transparent droplets
- Design and fabrication of a custom experimental test setup, including camera positioning, controlled illumination, and calibration geometry

- Data collection, model training, and validation of detection performance under controlled experimental conditions

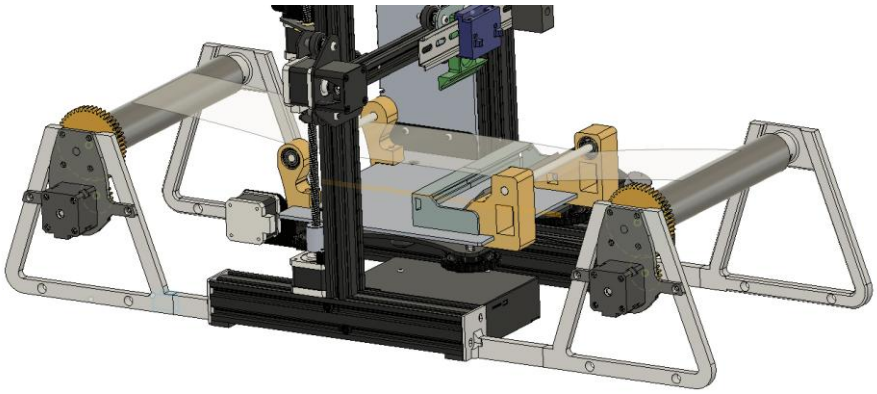

Figure 6: R2R mechanism

Outcome

Developed a real-time droplet detection and monitoring system enabling precise control and feedback in automated deposition processes, improving process reliability and supporting scalable automation of material manufacturing systems. The system enables real-time quality monitoring through vision-based feedback integration.

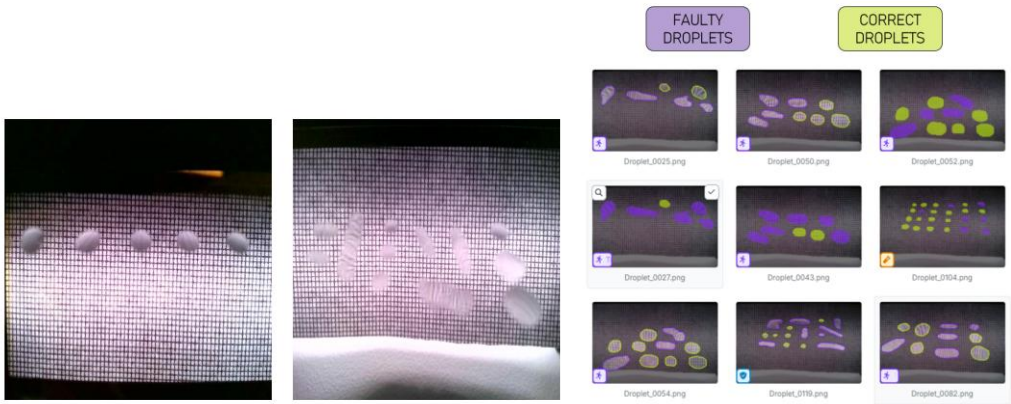

Figure 7: Droplet detection

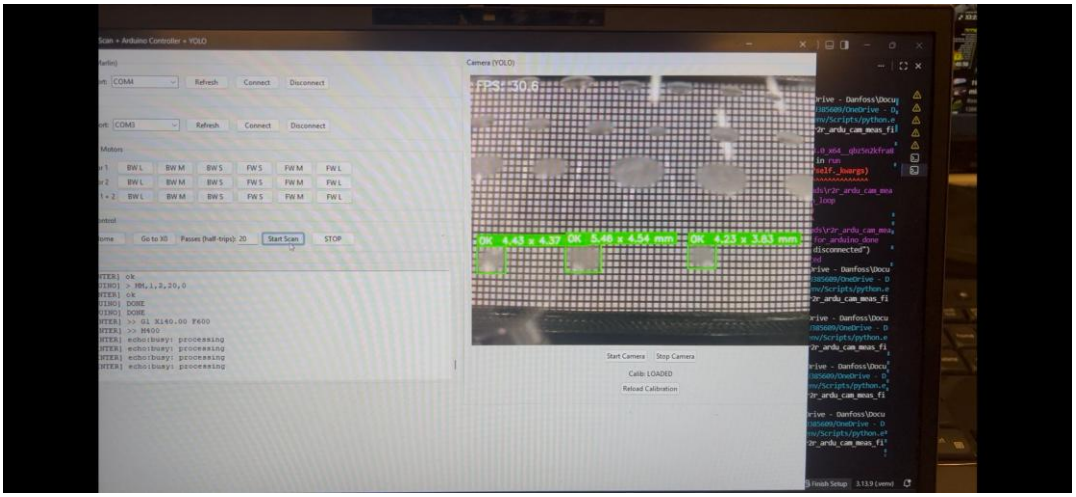

Figure 8: User interface for droplet detection

Hand Gesture Recognition using CNNs

Developed a computer vision model for classifying hand gestures and rejecting irrelevant inputs, simulating real-world human-computer interaction scenarios.

Figure 9: Hand gesture data

Role

Designed and implemented the full machine learning pipeline including data preprocessing, model training, and evaluation. Applied transfer learning and optimization techniques to improve robustness and generalization.

Technical Contributions

- Implemented transfer learning pipeline using pretrained ResNet18 in PyTorch
- Designed data augmentation pipeline to improve generalization and robustness
- Implemented label smoothing and weighted sampling
- Fine-tuned selected layers for improved performance
- Designed training pipeline with learning rate scheduling
- Evaluated model performance using confusion matrices and training dynamics analysis

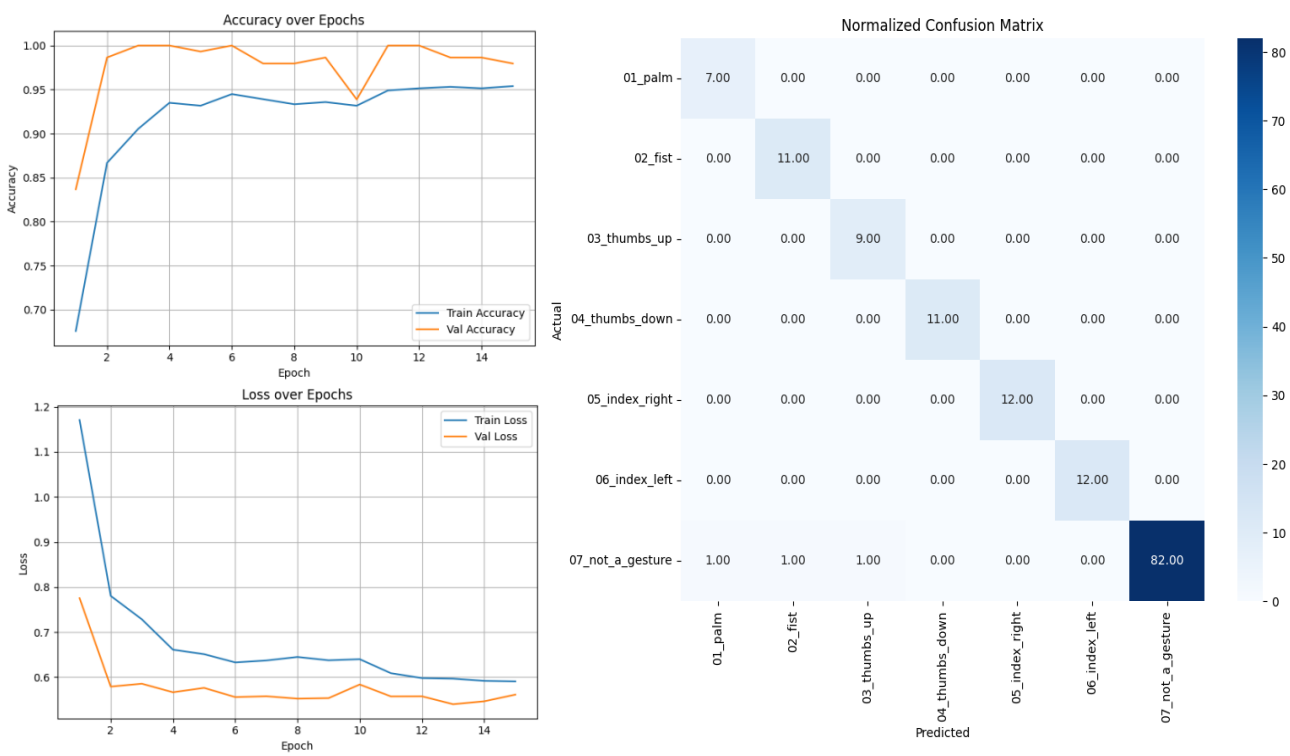

Figure 10: Model Evaluation

Outcome

- Achieved 97.9% validation accuracy with strong generalization
- Reached near-perfect classification across gesture classes
- Successfully handled ambiguous inputs via a dedicated “not-a-gesture” class
- Demonstrated stable training with minimal overfitting

Model setup

```python
from torchvision import models
import torch.nn as nn
import torch

device = torch.device("cuda" if torch.cuda.is_available() else "cpu")

model = models.resnet18(pretrained=True)
for param in model.parameters():
    param.requires_grad = False

# Fine-tune last block
for param in model.layer4.parameters():
    param.requires_grad = True

# Replace FC layer
model.fc = nn.Sequential(
    nn.Dropout(0.4),
    nn.Linear(model.fc.in_features, len(class_names))
)
model = model.to(device)
```

✓ 0.1s

Defining Loss, Optimizier and scheduler

```python
import torch.optim as optim
from torch.optim.lr_scheduler import ReduceLROnPlateau

criterion = nn.CrossEntropyLoss(label_smoothing=0.1)

optimizer = optim.Adam([
    {'params': model.layer4.parameters(), 'lr': 1e-4},
    {'params': model.fc.parameters(), 'lr': 1e-3}
])

scheduler = ReduceLROnPlateau(optimizer, mode='min', factor=0.5, patience=2, verbose=True)
```

✓ 0.0s

Predicted: 06_index_left | Actual: 06_index_left

Figure 11: Model setup and training

Ball Joint Sensor Integration (Bachelor Thesis finished February 2024)

Investigation of methods for extracting rotational data from a mechanical ball joint system, where direct measurement of joint orientation is not inherently available. The project focused on enabling accurate and reliable sensing for use in control and monitoring applications.

Role

Developed a complete sensing approach for capturing and interpreting rotational motion from the ball joint. This included sensor selection, integration into the mechanical system, and development of data processing methods to extract meaningful rotational information.

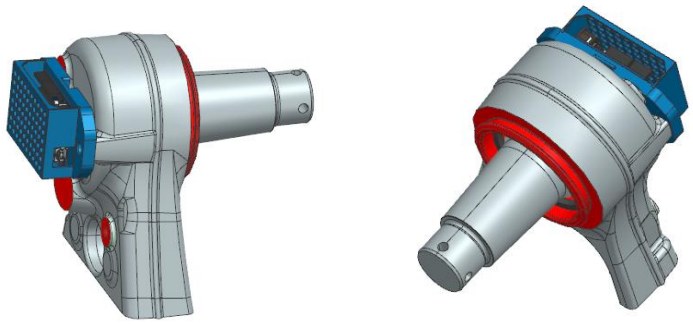

Figure 12 & 13: Joint full assembly

Technical Contributions

- Integrated sensors into a constrained mechanical ball joint assembly
- Developed signal processing methods to convert raw sensor data into usable rotational information
- Performed mechanical analysis to understand system behavior and measurement limitations
- Implemented data acquisition and processing workflows for validation
- Conducted experimental testing and calibration to improve accuracy and reliability
- Technologies: Sensors, Signal Processing, Data Acquisition, MATLAB/Python, Mechanical Analysis

Outcome

Developed a method for accurately extracting rotational information from an indirectly measurable system, enabling reliable sensing for control and monitoring applications in mechanically constrained environments. Demonstrated the integration of sensing, mechanical analysis, and signal processing for indirect state estimation.

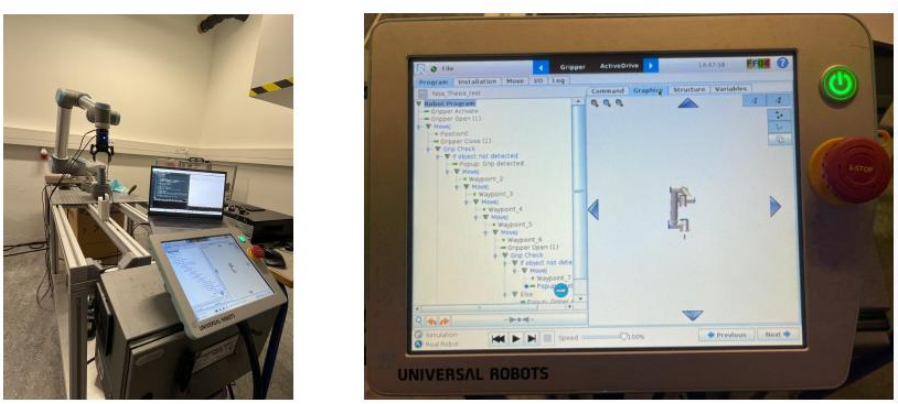

Figure 14 & 15: Testing setup

Joystick Test System – Danfoss Power Solutions

Development of hardware-based testing systems for validation of industrial joystick performance in real-world applications. The project focused on improving the efficiency, repeatability, and reliability of validation processes by transitioning from manual testing to automated and semi-automated test setups.

Role

Designed and built multiple test setups for joystick validation, contributing to both hardware development and the automation of testing procedures. Worked across the full development cycle, including concept development, mechanical design, system integration, and experimental validation. Collaborated with engineers to ensure test systems met functional requirements and aligned with product development needs.

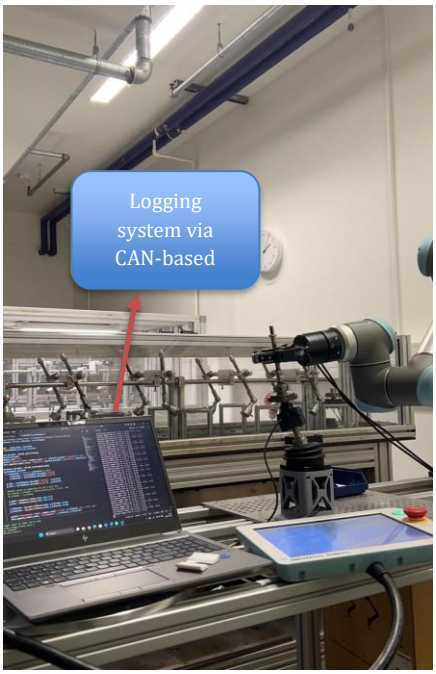

Figure 16 & 17: Test Setup

Technical Contributions

- Designed mechanical test rigs and fixtures using CAD (NX / Fusion)
- Integrated sensors and measurement systems for capturing joystick performance data using a MEAS position sensor
- Developed data logging and analysis workflows for evaluating system behavior via CAN-based communication
- Implemented robot-assisted testing for repeatable and automated validation sequences
- Conducted experimental validation and debugging to ensure accuracy and robustness of test setups

- Technologies: CAD (NX/Fusion), CAN Communication, Embedded Systems, Sensors, Python, Robotics

Outcome

Developed automated and semi-automated test systems for joystick validation, improving repeatability, measurement accuracy, and efficiency compared to manual testing processes. Enabled reliable data-driven validation through integrated sensing and CAN-based data acquisition.

Core skills

- Machine Learning
- Computer Vision
- Robotics
- Automation
- Mechanical design
- Embedded Systems
- Data Analysis