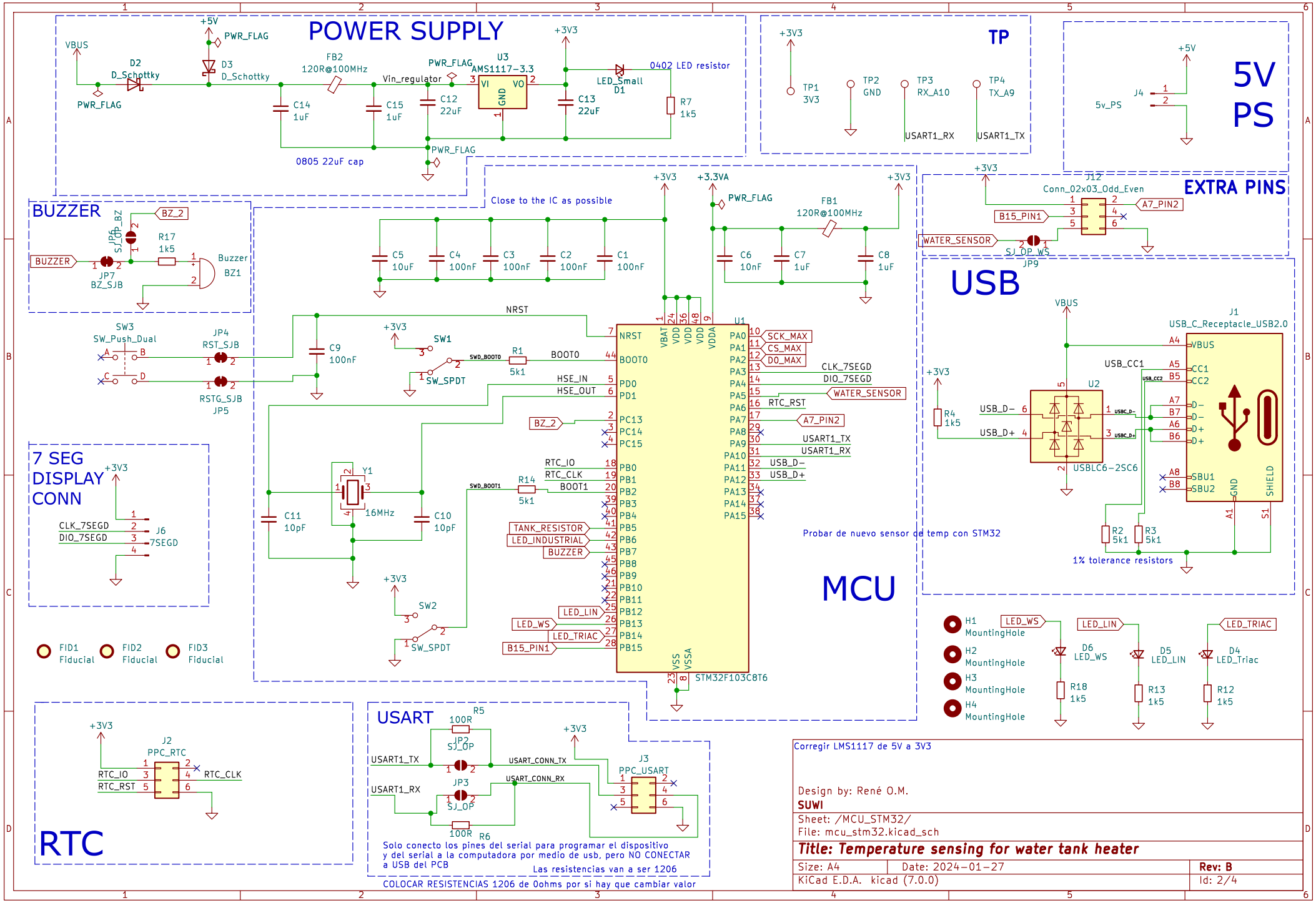
POWER SUPPLY
VBUS
+5V
PWR_FLAG
D2
D_Schottky
D3
D_Schottky
FB2
120R@100MHz
Vin_regulator
U3
AMS1117-3.3
VI
VO
GND
+3V3
LED_Small
D1
0402 LED resistor
R7
1k5
C14
1uF
C15
1uF
C12
22uF
C13
22uF
0805 22uF cap
TP
TP1
3V3
TP2
GND
TP3
RX_A10
TP4
TX_A9
USART1_RX
USART1_TX
5V
PS
J4
5v_PS
EXTRA PINS
J12
Conn_02x03_Odd_Even
A7_PIN2
B15_PIN1
WATER_SENSOR
SJ_OP_WS
JP9
BUZZER
BZ_2
JP6
SJ_OP_BZ
R17
1k5
Buzzer
BZ1
JP7
BZ_SJB
Close to the IC as possible
+3.3VA
FB1
120R@100MHz
C5
10uF
C4
100nF
C3
100nF
C2
100nF
C1
100nF
C6
10nF
C7
1uF
C8
1uF
USB
J1
USB_C_Receptacle_USB2.0
VBUS
CC1
CC2
D-
D+
SBU1
SBU2
GND
SHIELD
USB_CC1
USB_CC2
USB_D-
USB_D+
U2
USBLC6-2SC6
R4
1k5
R2
5k1
R3
5k1
1% tolerance resistors
SW3
SW_Push_Dual
JP4
RST_SJB
RSTG_SJB
JP5
NRST
C9
100nF
SW1
SW_SPDT
SWD_BOOT0
R1
5k1
BOOT0
HSE_IN
HSE_OUT
BZ_2
Y1
16MHz
C11
10pF
C10
10pF
SWD_BOOT1
R14
5k1
BOOT1
RTC_IO
RTC_CLK
TANK_RESISTOR
LED_INDUSTRIAL
BUZZER
LED_LIN
LED_WS
LED_TRIAC
B15_PIN1
SW2
SW_SPDT
U1
NRST
BOOT0
PD0
PD1
PC13
PC14
PC15
PB0
PB1
PB2
PB3
PB4
PB5
PB6
PB7
PB8
PB9
PB10
PB11
PB12
PB13
PB14
PB15
PA0
PA1
PA2
PA3
PA4
PA5
PA6
PA7
PA8
PA9
PA10
PA11
PA12
PA13
PA14
PA15
VBAT
VDD
VDDA
VSS
VSSA
SCK_MAX
CS_MAX
DO_MAX
CLK_7SEGD
DIO_7SEGD
WATER_SENSOR
RTC_RST
A7_PIN2
USART1_TX
USART1_RX
USB_D-
USB_D+
STM32F103C8T6
MCU
Probar de nuevo sensor de temp con STM32
7 SEG
DISPLAY
CONN
J6
7SEGD
CLK_7SEGD
DIO_7SEGD
FID1
Fiducial
FID2
Fiducial
FID3
Fiducial
H1
MountingHole
H2
MountingHole
H3
MountingHole
H4
MountingHole
D6
LED_WS
R18
1k5
D5
LED_LIN
R13
1k5
D4
LED_Triac
R12
1k5
RTC
J2
PPC_RTC
RTC_IO
RTC_RST
RTC_CLK
USART
R5
100R
JP2
SJ_OP
USART1_TX
USART_CONN_TX
USART1_RX
USART_CONN_RX
JP3
SJ_OP
R6
100R
J3
PPC_USART
Solo conecto los pines del serial para programar el dispositivo
y del serial a la computadora por medio de usb, pero NO CONECTAR
a USB del PCB
Las resistencias van a ser 1206
COLOCAR RESISTENCIAS 1206 de 0ohms por si hay que cambiar valor
Corregir LMS1117 de 5V a 3V3
Design by: René O.M.
SUWI
Sheet: /MCU_STM32/
File: mcu_stm32.kicad_sch
Title: Temperature sensing for water tank heater
Size: A4
Date: 2024-01-27
Rev: B
KiCad E.D.A. kicad (7.0.0)
Id: 2/4