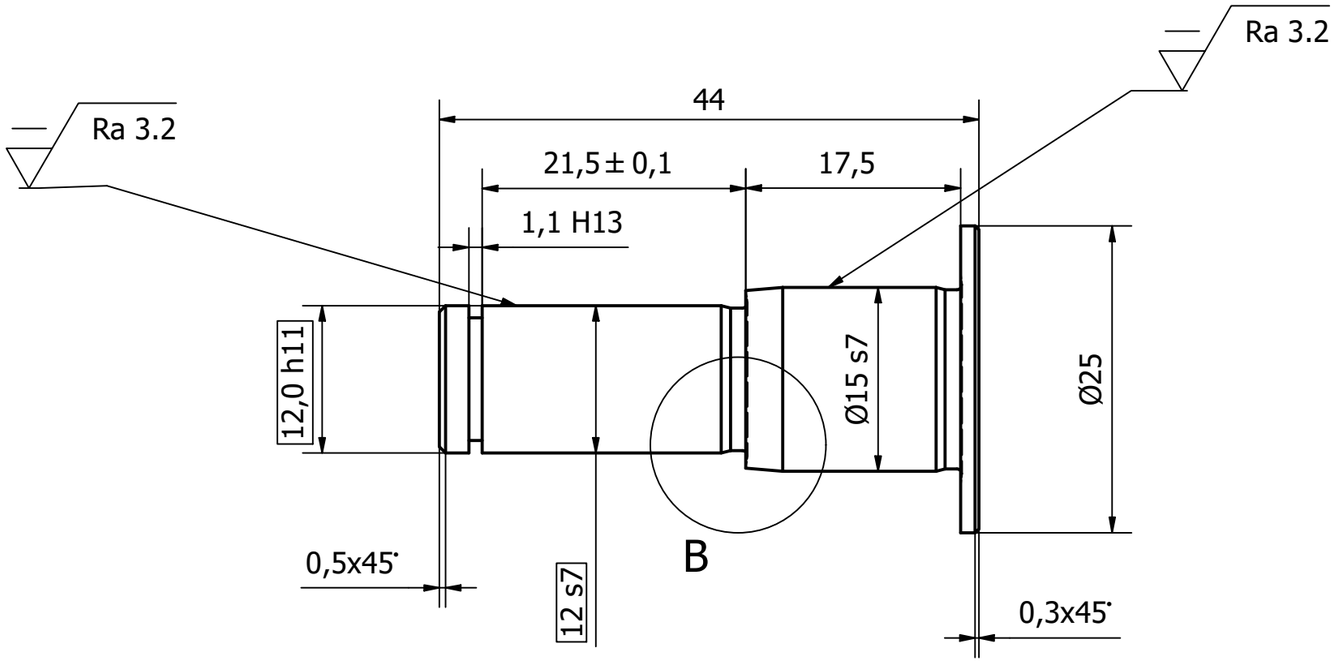

View 1:1

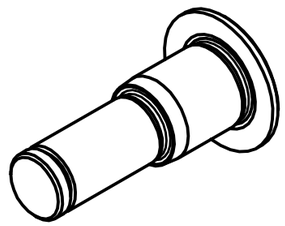

Relief groove - DIN 509 F 0,4x0,2

B (2 : 1)

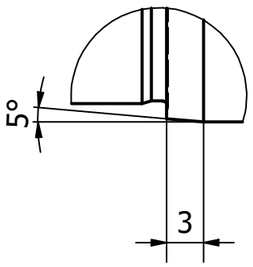

TABLE	
Fit	Tolerance

Note: Verify the dimensions marked with a square

V.	Change	Date	Name
	Change description	Date	Kürzel

Unless otherwise specified:
Dimensions are in millimeters.
General tolerances:
- Plastic moulded parts: DIN ISO 20457:2018
- TG7
- Metal and other plastic parts: DIN ISO 2769-fH

Material to comply with
RoHS Directive 2011/65/EU incl. 2015/863/EU

ERGOSANA
SCHILLER GROUP
Ganshorn Medizin Electronic GmbH
Industriestraße 6-8, D-97618 Niederlauer, Germany

Proprietary and confidential.
The information contained in this drawing is the sole property of Ganshorn Medizin Electronic GmbH. Any reproduction in part or as a whole without the written permission of Ganshorn Medizin Electronic GmbH is prohibited.

Material
1,0711 (9S20)

Scale
2 : 1

Title
Pin, Tension lever Stage

Approved by

ERG-Article-Nr.
26-10-212

Dept.R&D

Sheet
1