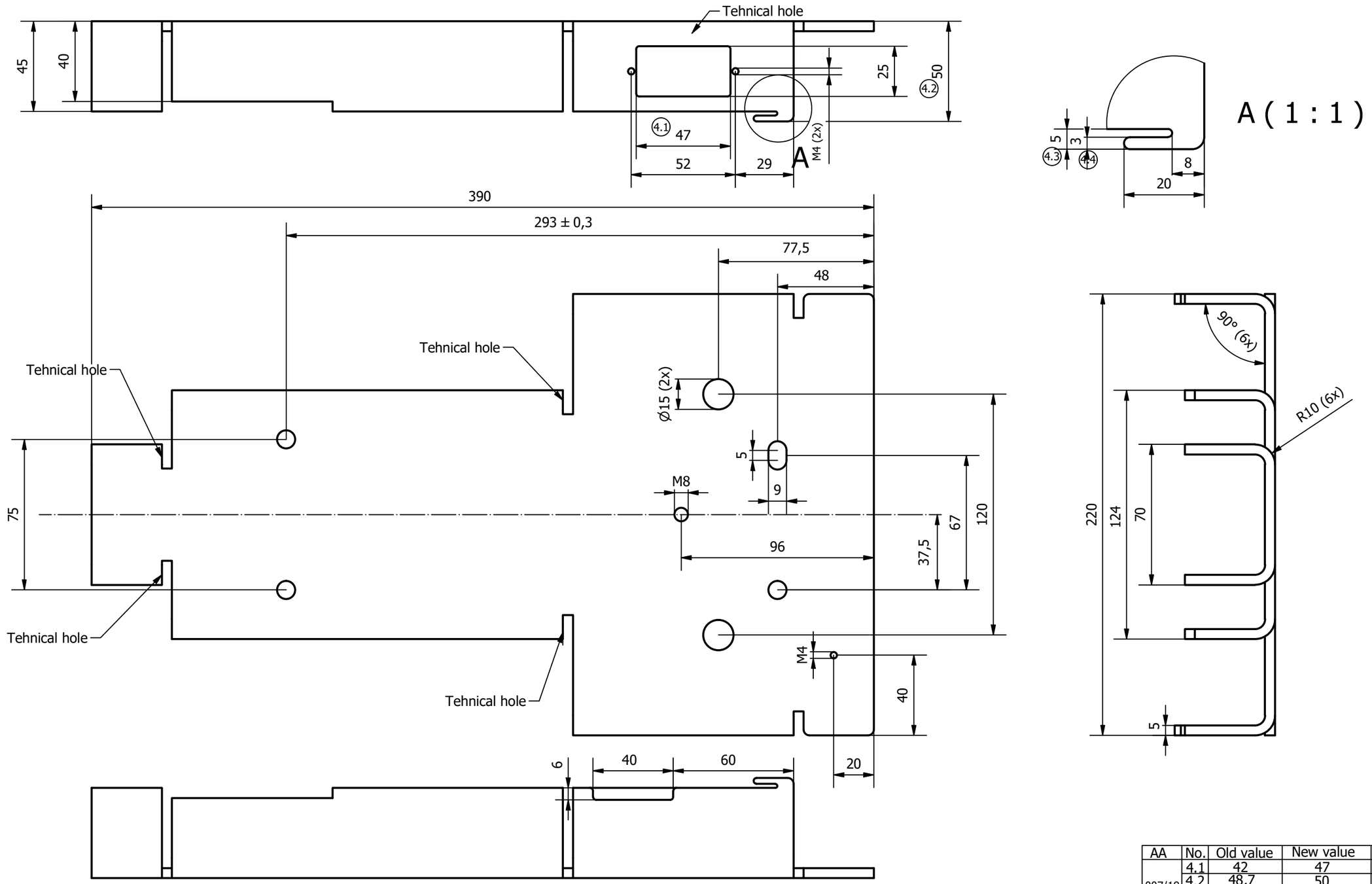

AA	No.	Old value	New value	Area
007/19	4.1	42	47	4A
	4.2	48,7	50	6A
	4.3	3,7	5	7A
	4.4	2,5	3	7A

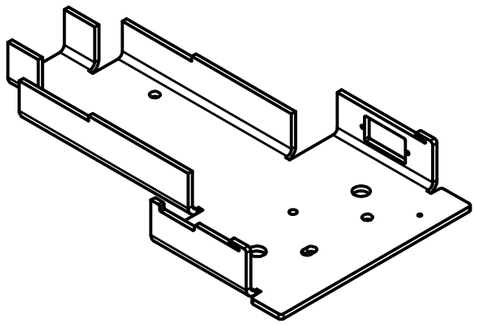

Note: Create technical holes as needed to ensure all dimensions are met

V.	Change	Date	Name
01	Long hole	30.05.2016	G.Gaus
02	Threaded holes	13.02.2017	G.Gaus
03	Cutout interface board	18.07.2019	G.Gaus
04	Transfer to Inventor	30.01.2025	Z.Gabric

Unless otherwise specified:
Dimensions are in millimeters.
General tolerances:
- Plastic moulded parts: DIN ISO 20457:2018
- TG7
- Metal and other plastic parts: DIN ISO 2769-fH

Material to comply with
RoHS Directive 2011/65/EU incl. 2015/863/EU

ERGOSANA
SCHILLER GROUP
Ganshorn Medizin Electronic GmbH
Industriestraße 6-8, D-97618 Niederlauer, Germany

Material
1.0037 (S235JR)

Scale
1 : 2

Approved by

Title
Central plate

ERG-Article-Nr.
28-30-101-A1

Dept.R&D
Abteilung

Sheet
1

Proprietary and confidential.
The information contained in this drawing is the sole property of Ganshorn Medizin Electronic GmbH. Any reproduction in part or as a whole without the written permission of Ganshorn Medizin Electronic GmbH is prohibited.