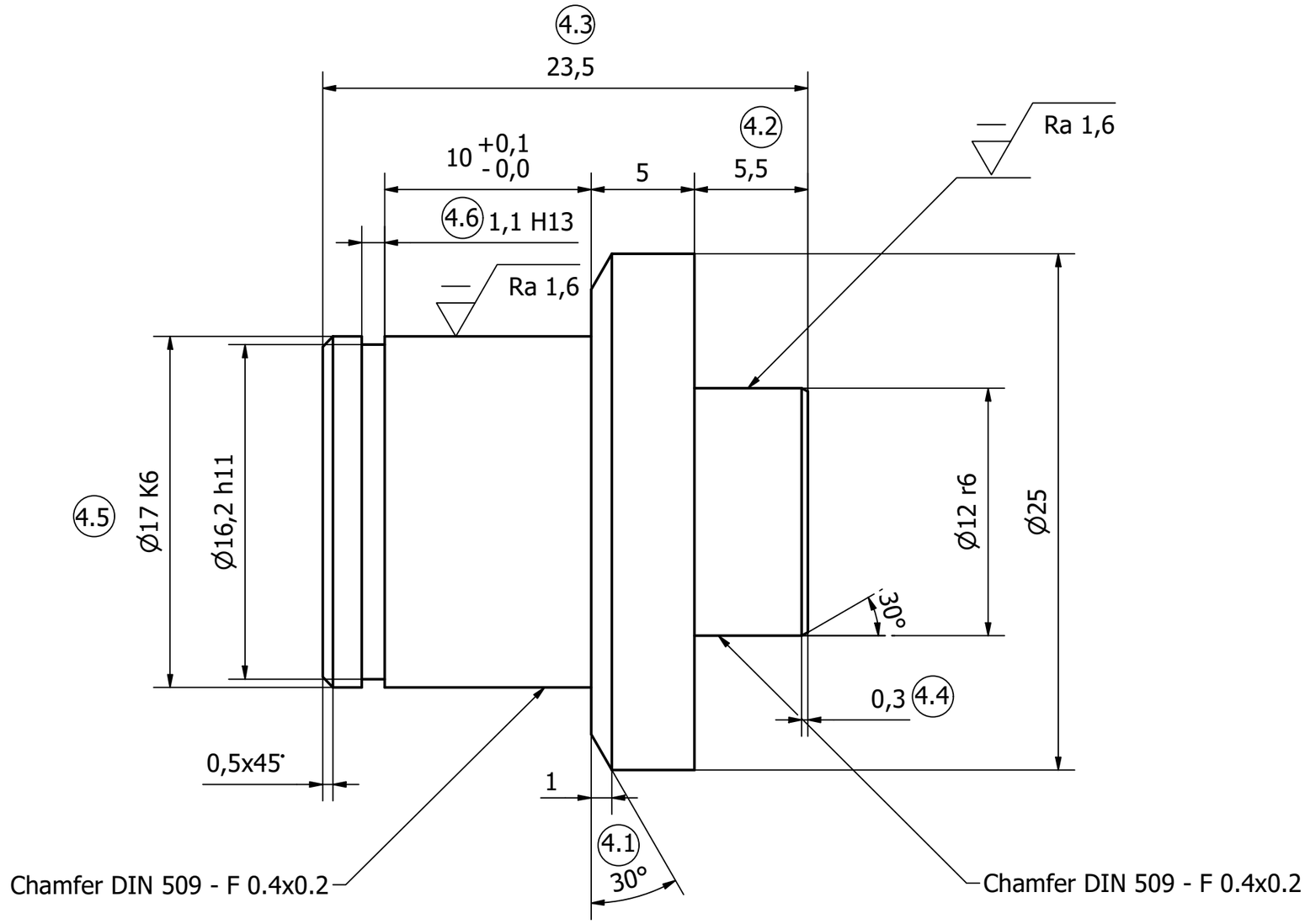

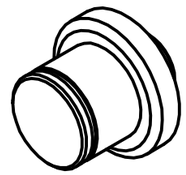

No.	Old value	New value	Area
4.1	-//-	1x30°	C2
4.2	7	5,5	B3
4.3	25	23,5	B2
4.4	1,5x30°	0,3x30°	C3
4.5	17 h6	17 k6	B/C1
4.6	1,1 +0,3	1,1 H13	B2

Ra 6,3

Fit	Tolerance
1,1 H13	0,14 / 0
12 r6	0,034 / 0,023
16,2 h11	-0,133 / -0,023
17 k6	0,012 / 0,001

V.	Change	Date	Name
#	Change description	Date	Kürzel

Unless otherwise specified:
Dimensions are in millimeters.
General tolerances:
- Plastic moulded parts: DIN ISO 20457:2018
- TG7
- Metal and other plastic parts: DIN ISO 2769-fH

Material to comply with
RoHS Directive 2011/65/EU incl. 2015/863/EU

ERGOSANA
SCHILLER GROUP
Ganshorn Medizin Electronic GmbH
Industriestraße 6-8, D-97618 Niederlauer, Germany

Material
1.0711 (9S20)

Scale
4 : 1

Title
Bearing pin

Approved by

ERG-Article-Nr.
26-10-208

Dept.R&D
Abteilung

Sheet
1

Proprietary and confidential.
The information contained in this drawing is the sole property of Ganshorn Medizin Electronic GmbH. Any reproduction in part or as a whole without the written permission of Ganshorn Medizin Electronic GmbH is prohibited.