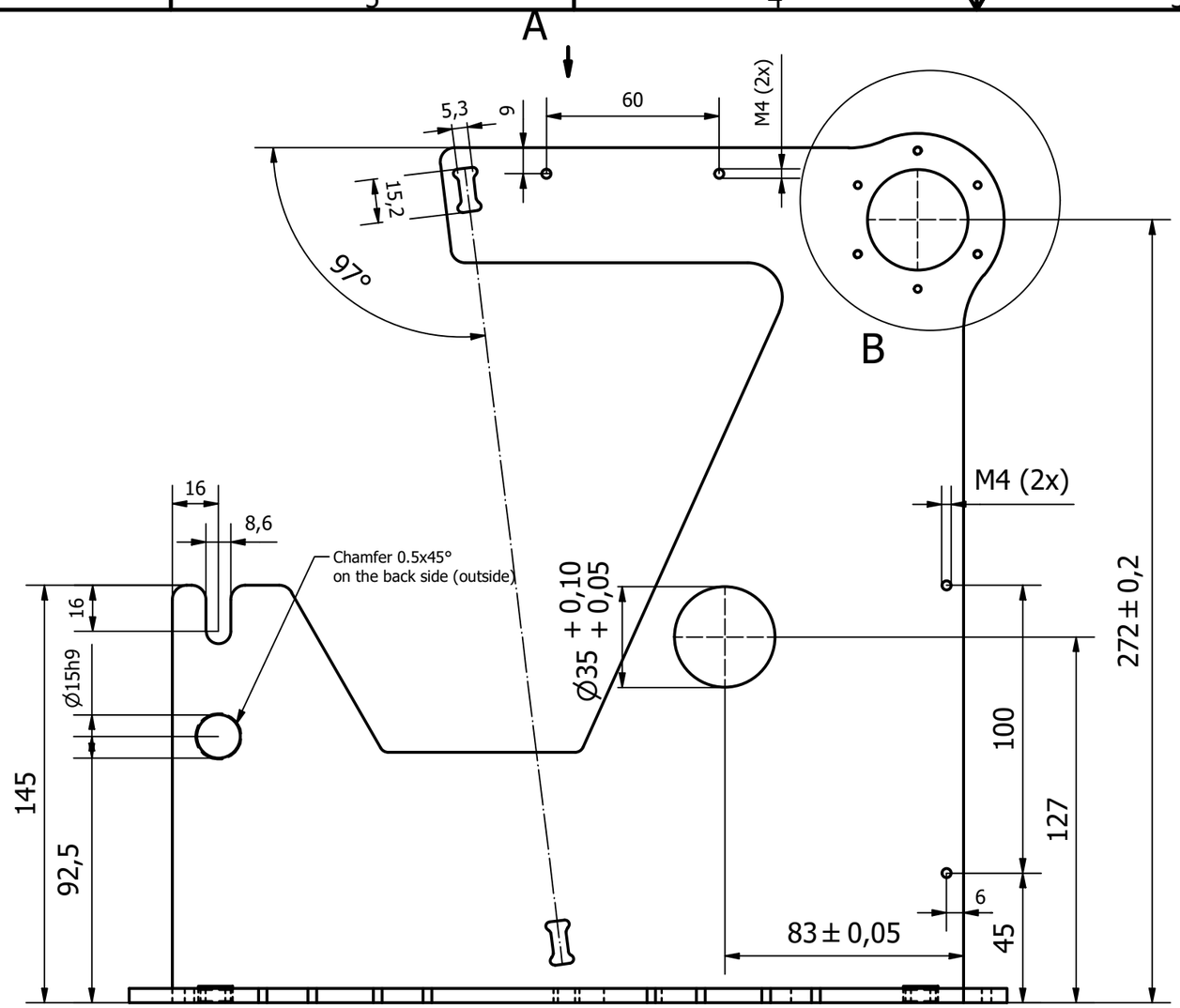

A (1 : 2)

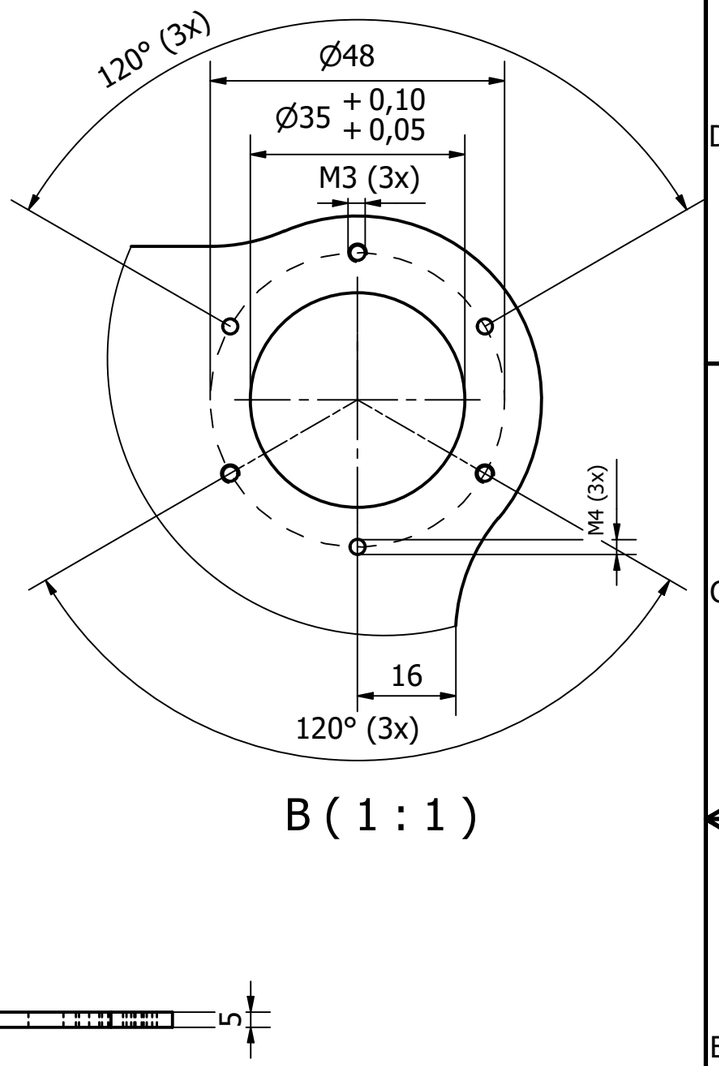

B (1 : 1)

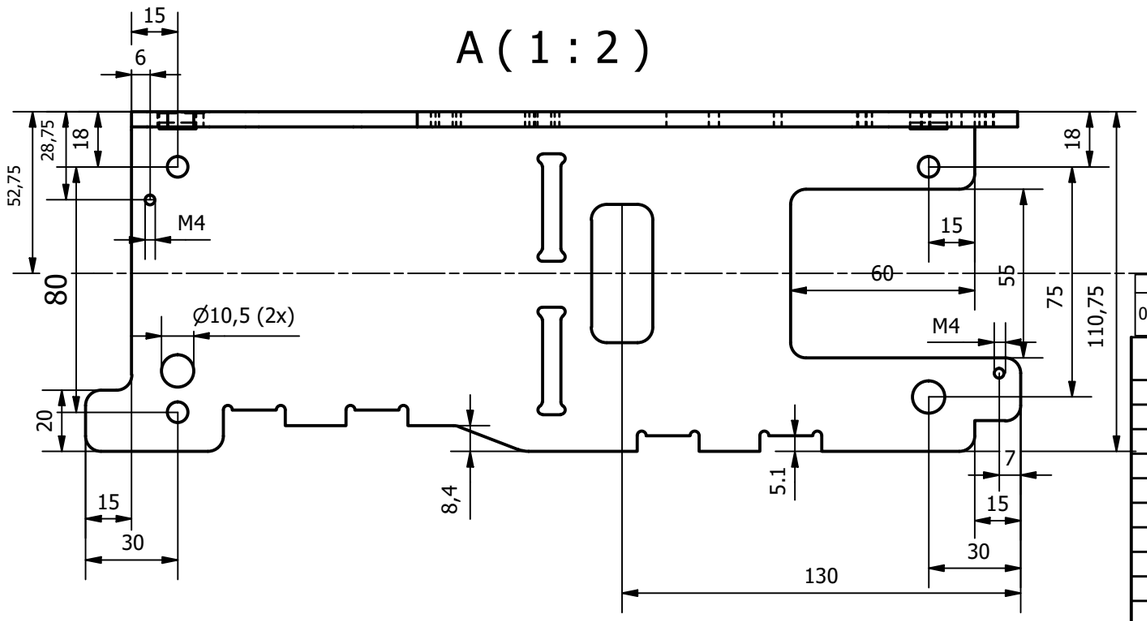

AA	No.	Old value	New value	Areas
006/20	5.1	-//-	M3 (3x)	7A
	5.2	Ø2,45 (3x)	M4 (3x)	8B

	Date	Name	Kürzel

Unless otherwise specified:
Dimensions are in millimeters.
General tolerances:
- Plastic moulded parts: DIN ISO 20457:2018
- TG7
- Metal and other plastic parts: DIN ISO 2769-fH

Material to comply with
RoHS Directive 2011/65/EU incl. 2015/863/EU

ERGOSANA
SCHILLER GROUP
Ganshorn Medizin Electronic GmbH
Industriestraße 6-8, D-97618 Niederlauer, Germany

Proprietary and confidential.
The information contained in this drawing is the sole property of Ganshorn Medizin Electronic GmbH. Any reproduction in part or as a whole without the written permission of Ganshorn Medizin Electronic GmbH is prohibited.

Material
1.0976 (S355 MC)

Scale
1 : 2

Title
Base plate

Fit	Tolerance
15h9	0/-43

Approved by

ERG-Article-Nr.
21-30-220-A

Dept.R&D
Abteilung

Sheet
1