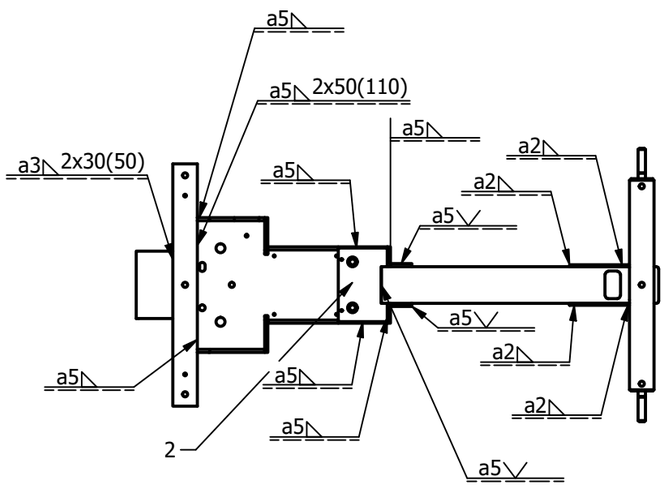

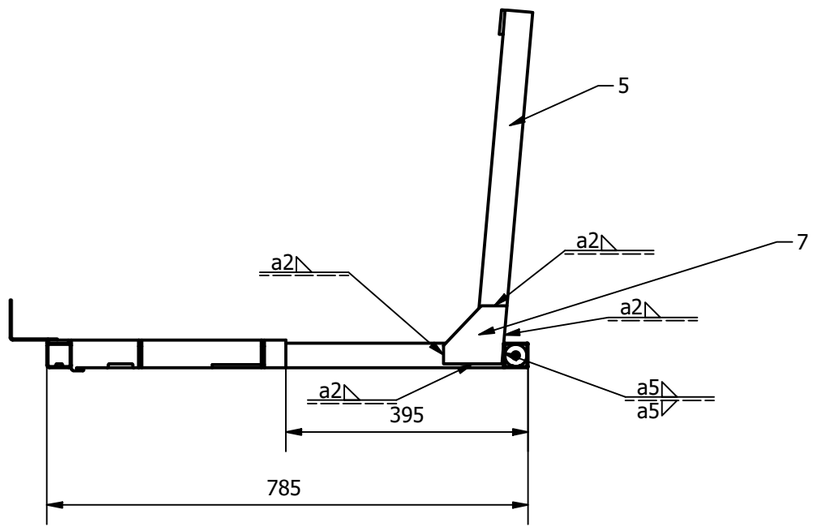

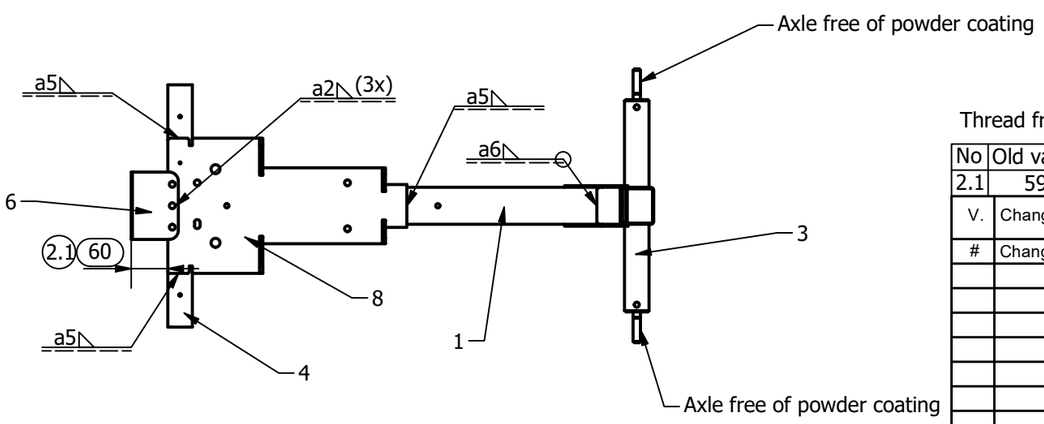

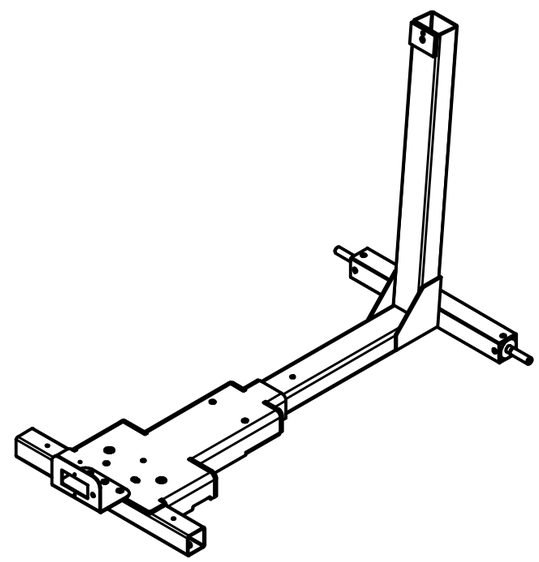

Thread free of powder coating

No	Old value	New value	Area
2.1	59	60	E1

V.	Change	Date	Name
#	Change description	Date	Kürzel

PARTS LIST				
ITEM	QTY	PART NUMBER	INDEX	DESCRIPTION
1	1	30-10-111		Central tube
2	1	28-30-101-A		Central plate component
3	1	21-30-102-A		Cross tube, front comp.
4	1	30-30-103		Cross tube at the rear
5	1	21-30-101-A		Guide tube for handlebar KP
6	1	28-30-100		Angle plate, power plug
7	2	31-10-114		Stiffening plate
8	1	31-10-112		Middle plate

Unless otherwise specified:
Dimensions are in millimeters.
General tolerances:
- Plastic moulded parts: DIN ISO 20457:2018
- TG7
- Metal and other plastic parts: DIN ISO 2769-fH

Material to comply with
RoHS Directive 2011/65/EU incl. 2015/863/EU

ERGOSANA
SCHILLER GROUP
Ganshorn Medizin Electronic GmbH
Industriestraße 6-8, D-97618 Niederlauer, Germany

Material
See individual part drawing

Scale
1 : 10

Approved by

Title
Base frame

ERG-Article-Nr.
21-30-101

Dept.R&D
Abteilung

Sheet
1

Proprietary and confidential.
The information contained in this drawing is the sole property of Ganshorn Medizin Electronic GmbH. Any reproduction in part or as a whole without the written permission of Ganshorn Medizin Electronic GmbH is prohibited.