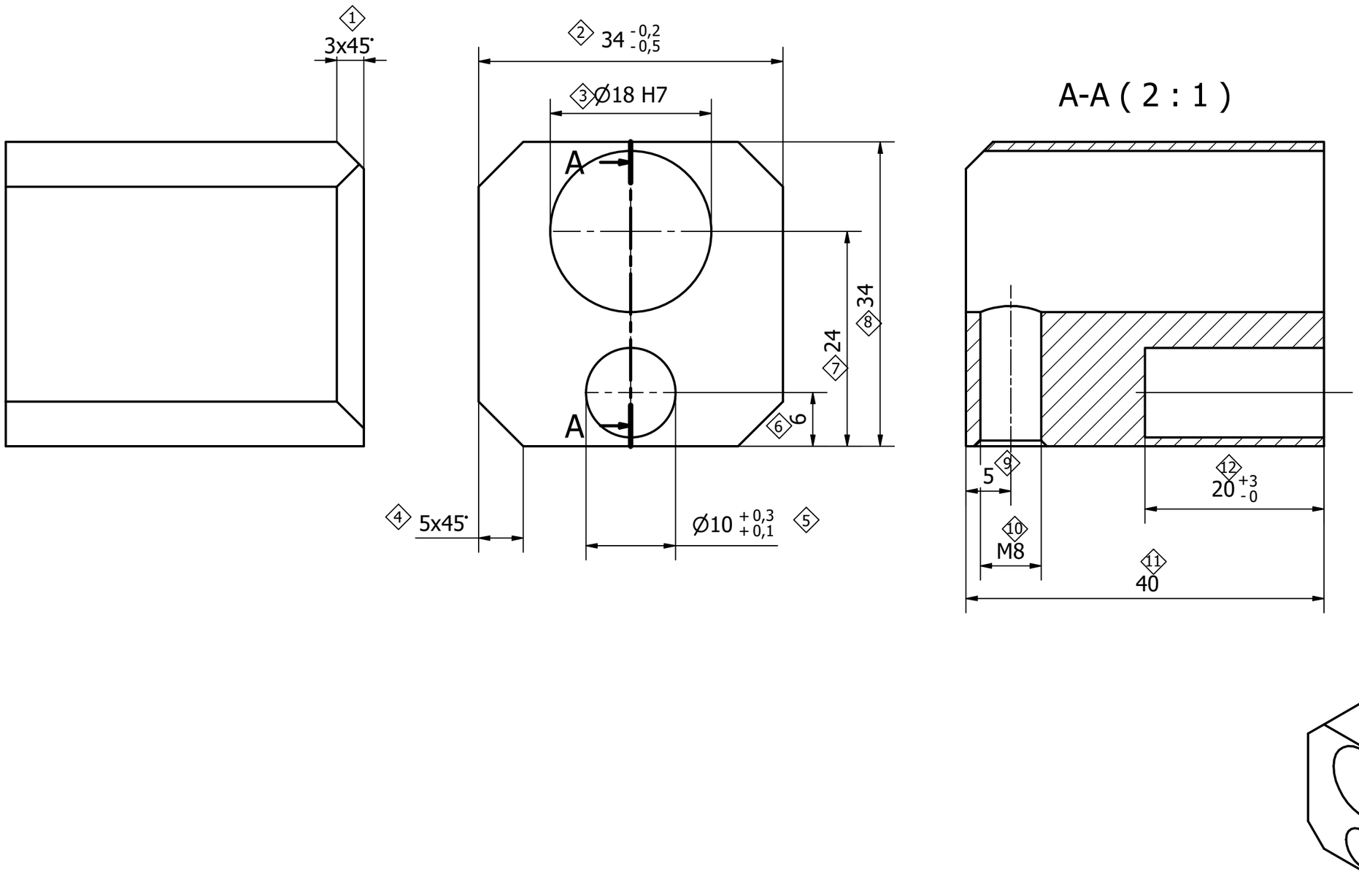

V.	Change	Date	Name
01	Transfer to Inventor	27.03.2025	Z.Gabric

Unless otherwise specified:
Dimensions are in millimeters.
General tolerances:
- Plastic moulded parts: DIN ISO 20457:2018
- TG7
- Metal and other plastic parts: DIN ISO 2769-fH

Material to comply with
RoHS Directive 2011/65/EU incl. 2015/863/EU

ERGOSANA
SCHILLER GROUP
Ganshorn Medizin Electronic GmbH
Industriestraße 6-8, D-97618 Niederlauer, Germany

Material
1.0037 (S235JR)

Scale
2 : 1

Approved by

Title
Holder block

ERG-Article-Nr.
27-12-109

Dept.R&D
Abteilung

Sheet
1

Proprietary and confidential.
The information contained in this drawing is the sole property of Ganshorn Medizin Electronic GmbH. Any reproduction in part or as a whole without the written permission of Ganshorn Medizin Electronic GmbH is prohibited.