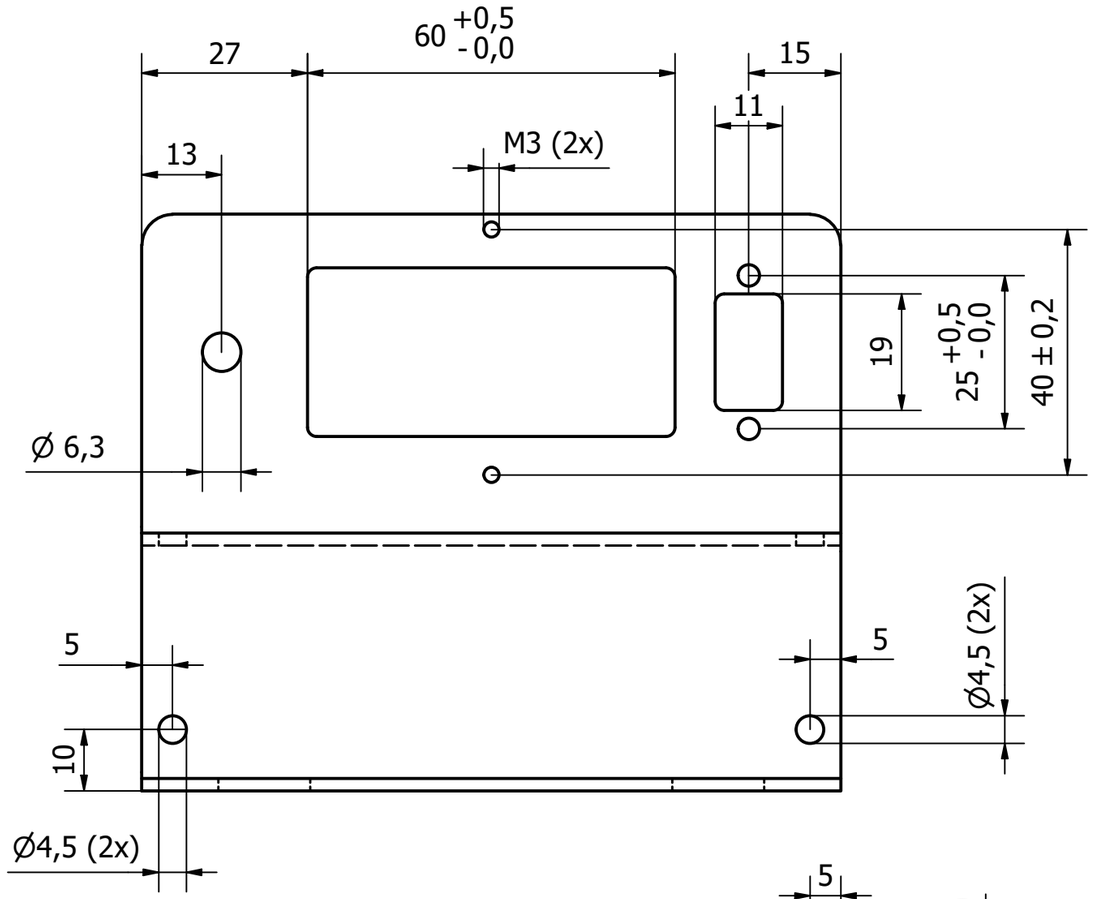

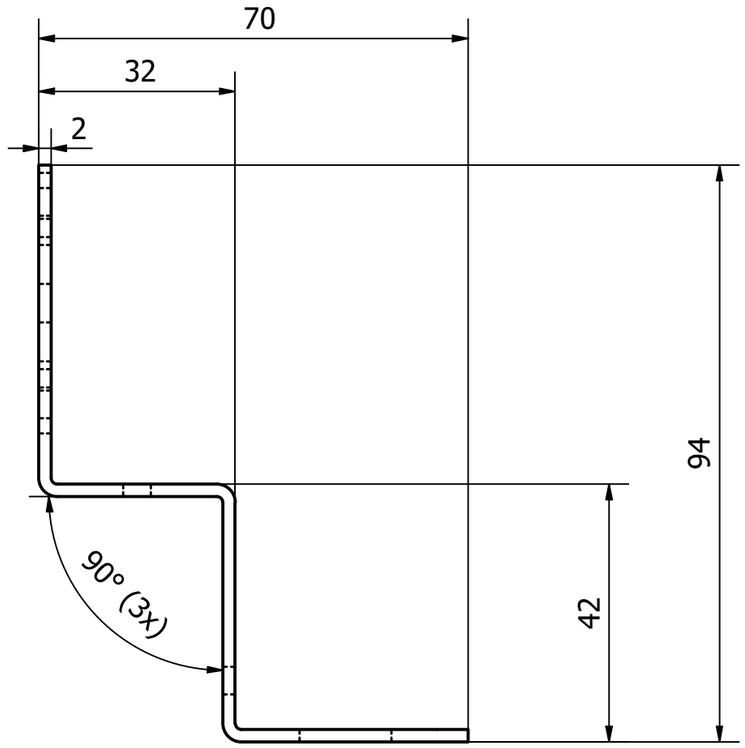

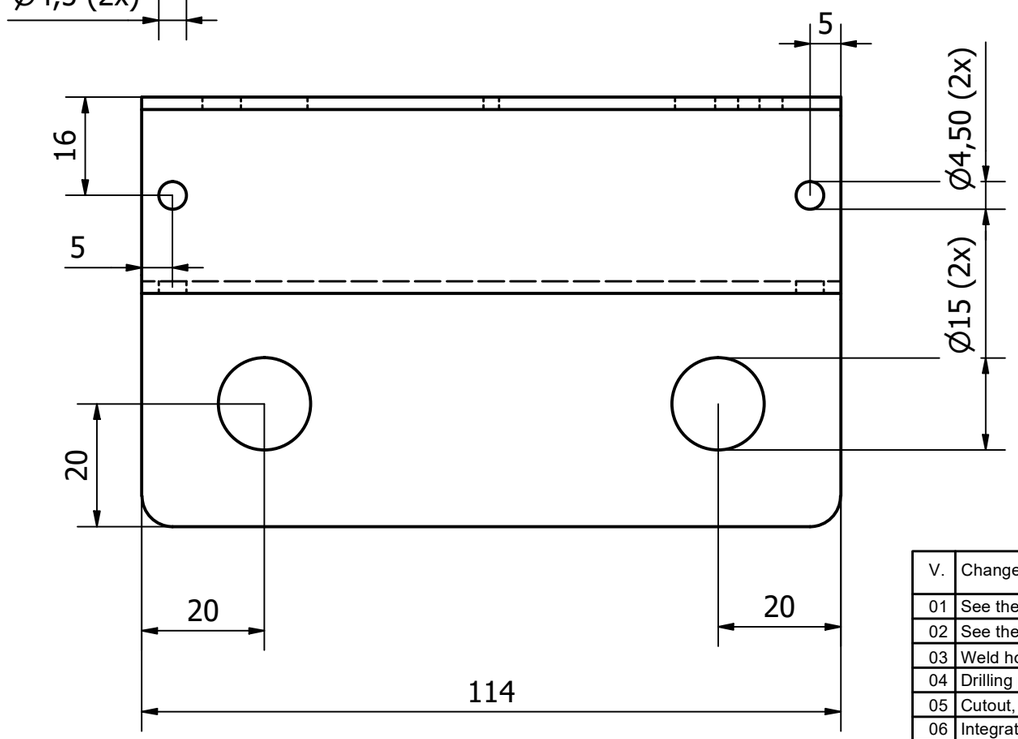

No.	Old value	New value	Area
6.1	63	60 +0,5/0	A2
6.2	30	27,5 +0,5/0	B3
6.3	39,5	40± 0,2	B3
6.4	8	10	B1

Unspecified radii and length dimensions according to the 3D model

V.	Change	Date	Name
01	See the table (Index 02)	06.07.2016	G.Gaus
02	See the table (Index 03)	20.10.2016	G.Gaus
03	Weld holes	02.12.2016	G.Gaus
04	Drilling potential compensation	25.01.2017	G.Gaus
05	Cutout, Combist.	25.01.2017	G.Gaus
06	Integration into the QMS	06.06.2024	J. Bähr
07	Transfer to Inventor	30.01.2025	Z.Gabric

Unless otherwise specified:
Dimensions are in millimeters.
General tolerances:
- Plastic moulded parts: DIN ISO 20457:2018
- TG7
- Metal and other plastic parts: DIN ISO 2769-fH

Material to comply with
RoHS Directive 2011/65/EU incl. 2015/863/EU

ERGOSANA
SCHILLER GROUP
Ganshorn Medizin Electronic GmbH
Industriestraße 6-8, D-97618 Niederlauer, Germany

Material
1.0037 (S235JR)

Scale
1 : 1

Approved by

Title
Connector plate, base frame

ERG-Article-Nr.
21-31-101-C1

Dept.R&D
Abteilung

Sheet
1

Proprietary and confidential.
The information contained in this drawing is the sole property of Ganshorn Medizin Electronic GmbH. Any reproduction in part or as a whole without the written permission of Ganshorn Medizin Electronic GmbH is prohibited.