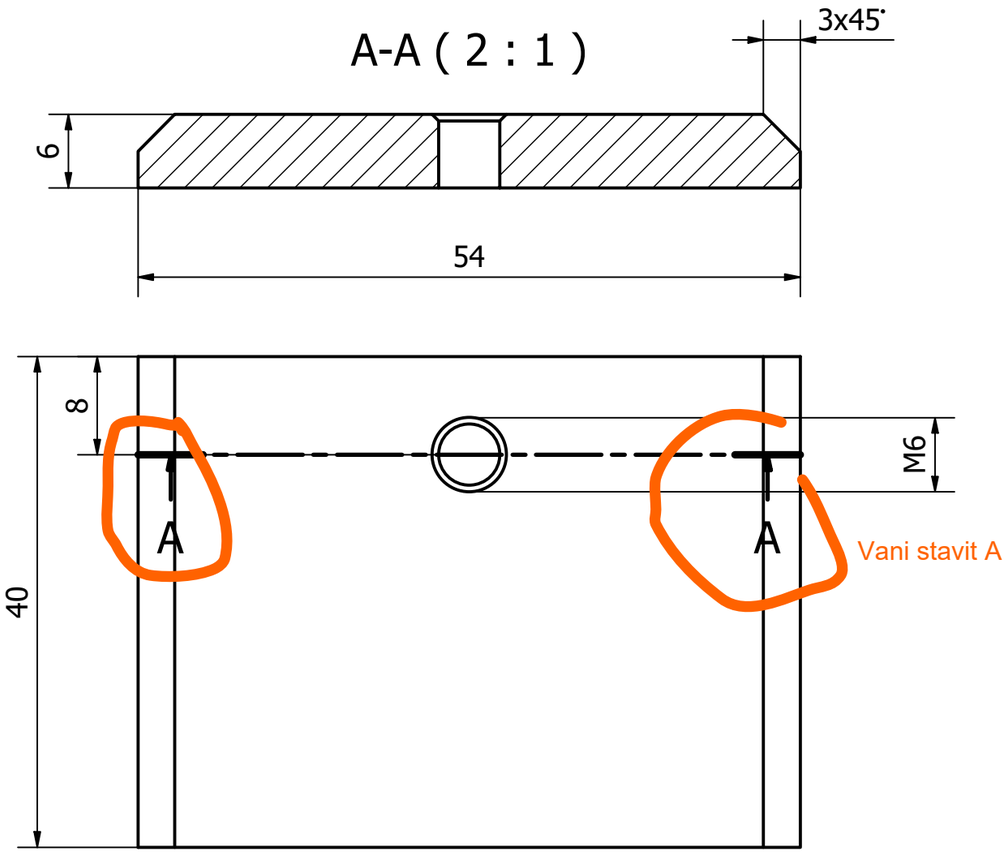

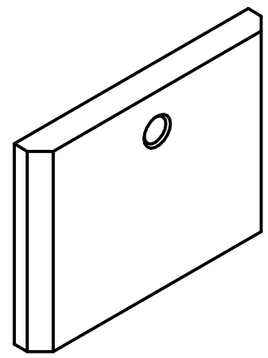

Stara verzija !
Stavi ovo na 27-10-808

V.	Change	Date	Name
01	Transfer to Inventor	30.01.2025	Z.Gabric

Unless otherwise specified:
Dimensions are in millimeters.
General tolerances:
- Plastic moulded parts: DIN ISO [illegible]
- TG7
- Metal and other plastic parts: DIN ISO 2769-fH

Material to comply with
RoHS Directive 2011/65/EU incl. 2015/863/EU

ERGOSANA
SCHILLER GROUP
Ganshorn Medizin Electronic GmbH
Industriestraße 6-8, D-97618 Niederlauer, Germany

Material: [illegible]0037 (S235JR)

Scale: 2 : 1

Approved by

Title: Pressure plate

ERG-Article-Nr.: 27-10-804

Dept.R&D
Abteilung

Sheet 1

Proprietary and confidential.
The information contained in this drawing is the sole property of Ganshorn Medizin Electronic GmbH. Any reproduction in part or as a whole without the written permission of Ganshorn Medizin Electronic GmbH is prohibited.