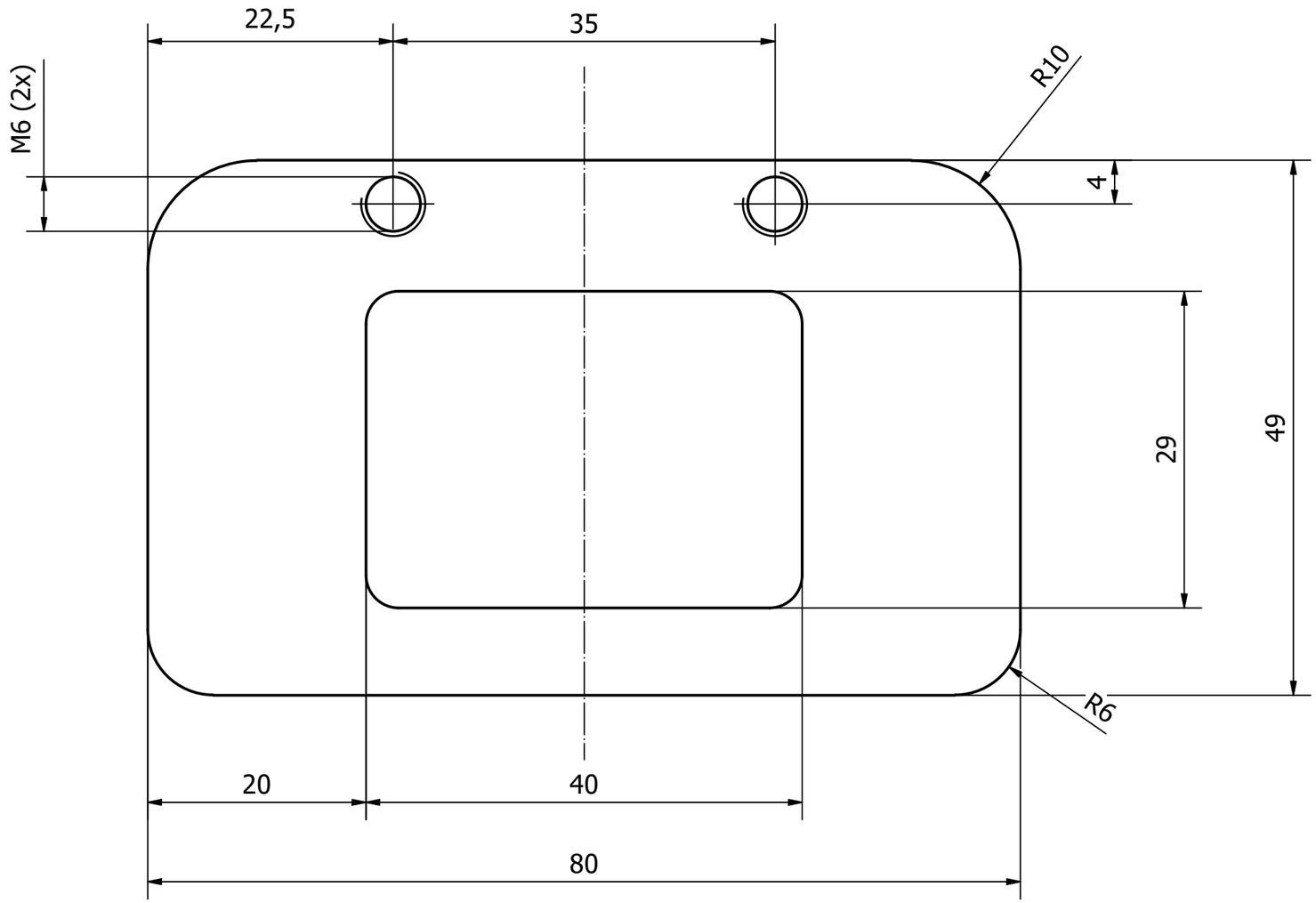

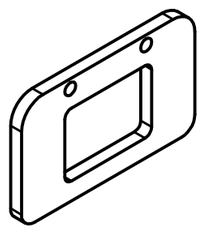

V.	Change	Date	Name
01	Material thickness	16.03.2016	G.Gaus
02	Drilling position	07.11.2016	G.Gaus
03	New design	16.12.2016	G.Gaus
04	Integration into the QMS	06.02.2024	J. Bähr
05	Transfer to Inventor	30.01.2025	Z.Gabric

Unless otherwise specified:
Dimensions are in millimeters.
General tolerances:
- Plastic moulded parts: DIN ISO 20457:2018
- TG7
- Metal and other plastic parts: DIN ISO 2769-fH

Material to comply with
RoHS Directive 2011/65/EU incl. 2015/863/EU

ERGOSANA
SCHILLER GROUP
Ganshorn Medizin Electronic GmbH
Industriestraße 6-8, D-97618 Niederlauer, Germany

Proprietary and confidential.
The information contained in this drawing is the sole property of Ganshorn Medizin Electronic GmbH. Any reproduction in part or as a whole without the written permission of Ganshorn Medizin Electronic GmbH is prohibited.

Material
1.0037 (S235JR)

Scale
2 : 1

Approved by

Title
Measuring head holder

ERG-Article-Nr.
21-30-801-A2

Dept.R&D
Abteilung

Sheet
1