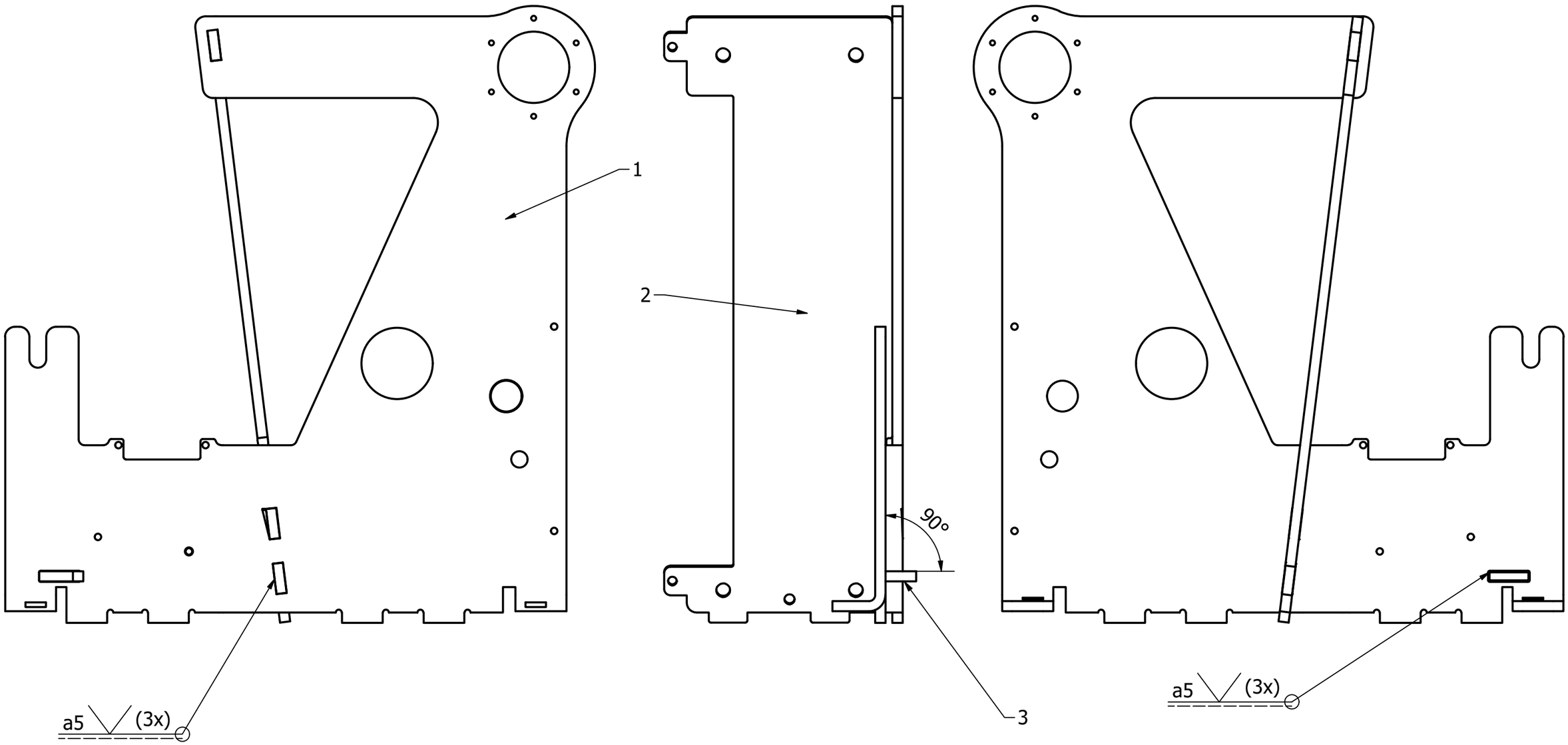

finish weld seams smoothly

PARTS LIST

ITEM	QTY	PART NUMBER	DESCRIPTION
1	1	21-30-220-B1	Side pane,Housing
2	1	21-30-220-B2	Central panel
3	1	21-30-220-B3	Strain gauge mounting plate

V.	Change	Date	Name
#	Change description	Date	Kürzel

Unless otherwise specified:
Dimensions are in millimeters.
General tolerances:
- Plastic moulded parts: DIN ISO 20457:2018
- TG7
- Metal and other plastic parts: DIN ISO 2769-fH

Material to comply with
RoHS Directive 2011/65/EU incl. 2015/863/EU

ERGOSANA
SCHILLER GROUP
Ganshorn Medizin Electronic GmbH
Industriestraße 6-8, D-97618 Niederlauer, Germany

Material
See individual part drawing

Scale
1 : 2

Approved by

Title
Side part

ERG-Article-Nr.
21-30-220-B

Dept.R&D
Abteilung

Sheet
1

Proprietary and confidential.
The information contained in this drawing is the sole property of Ganshorn Medizin Electronic GmbH. Any reproduction in part or as a whole without the written permission of Ganshorn Medizin Electronic GmbH is prohibited.