PARTS LIST			
ITEM	QTY	PART NUMBER	DESCRIPTION
1	1	21-30-102-A1	Cross tube, front
2	2	21-30-102-A3	Axle bolt

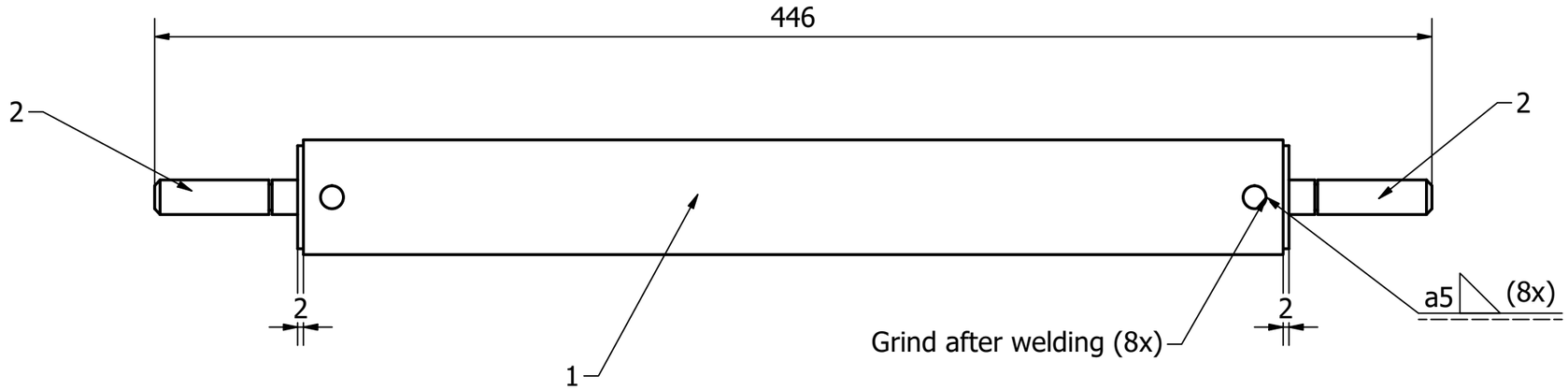

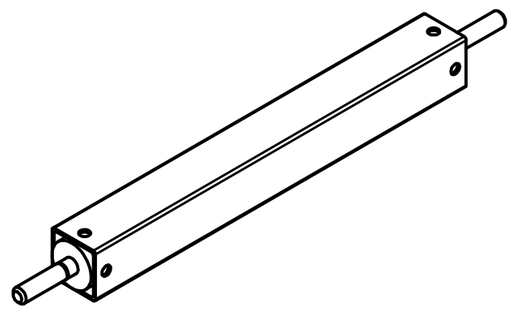

No.	Old value	New value	Area
1.1	21-30-102-A2	Not applicable	F3

V.	Change	Date	Name
01	Axle bolt	23.11.2016	G.Gaus
02	Integration into the QMS	23.01.2024	J. Bähr
03	Transfer to Inventor	23.01.2024	Z.Gabric

Unless otherwise specified:
Dimensions are in millimeters.
General tolerances:
- Plastic moulded parts: DIN ISO 20457:2018
- TG7
- Metal and other plastic parts: DIN ISO 2769-fH

Material to comply with
RoHS Directive 2011/65/EU incl. 2015/863/EU

ERGOSANA
SCHILLER GROUP
Ganshorn Medizin Electronic GmbH
Industriestraße 6-8, D-97618 Niederlauer, Germany

Material
See individual part drawing

Scale
1 : 2

Approved by

Title
Cross tube, front comp.

ERG-Article-Nr.
21-30-102-A

Dept.R&D
Abteilung

Sheet
1

Proprietary and confidential.
The information contained in this drawing is the sole property of Ganshorn Medizin Electronic GmbH. Any reproduction in part or as a whole without the written permission of Ganshorn Medizin Electronic GmbH is prohibited.