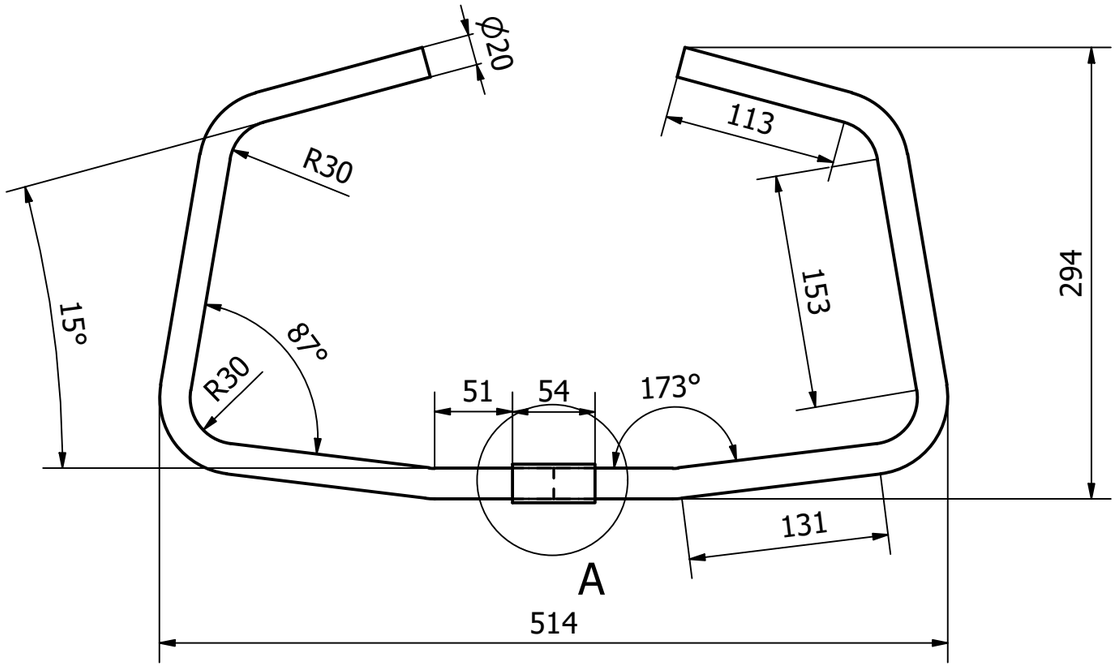


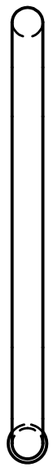

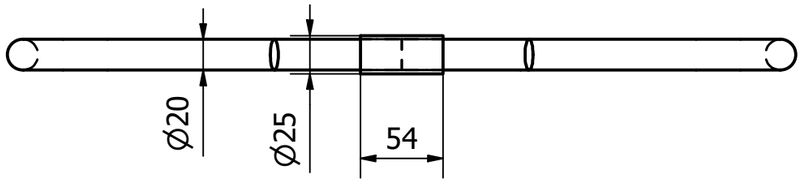


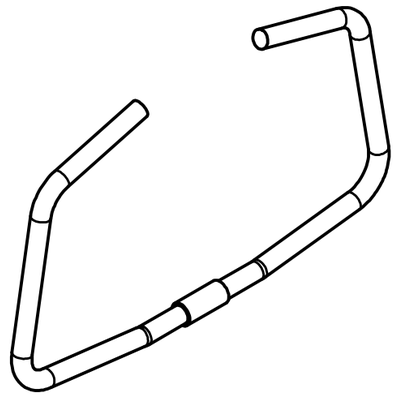

A ( 1 : 2 )

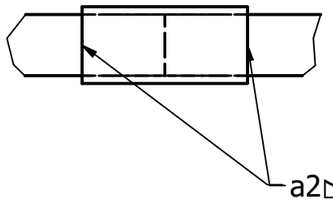


Surface: The bushing ⌀25 must not be damaged.
Runout must be ensured
Missing data can be obtained from the 3D set

| V. | Change | Date | Name |
|---|---|---|---|
| 01 | Integration into the QMS | 06.06.2024 | J. Bähr |
| 02 | Transfer to Inventor | 30.01.2025 | Z.Gabric |

*Unless otherwise specified:*
Dimensions are in millimeters.
General tolerances:
- Plastic moulded parts: DIN ISO 20457:2018
- TG7
- Metal and other plastic parts: DIN ISO 2769-fH

Material to comply with
RoHS Directive 2011/65/EU incl. 2015/863/EU

ERGOSANA
SCHILLER GROUP
Ganshorn Medizin Electronic GmbH
Industriestraße 6-8, D-97618 Niederlauer, Germany

Material
1.0045 (S355JR)

Scale
1 : 4

Approved by

Title
Metal insert, handle

ERG-Article-Nr.
21-10-806-A1

Dept.R&D
Abteilung

Sheet
1

Proprietary and confidential.
The information contained in this drawing is the sole property of Ganshorn Medizin Electronic GmbH. Any reproduction in part or as a whole without the written permission of Ganshorn Medizin Electronic GmbH is prohibited.