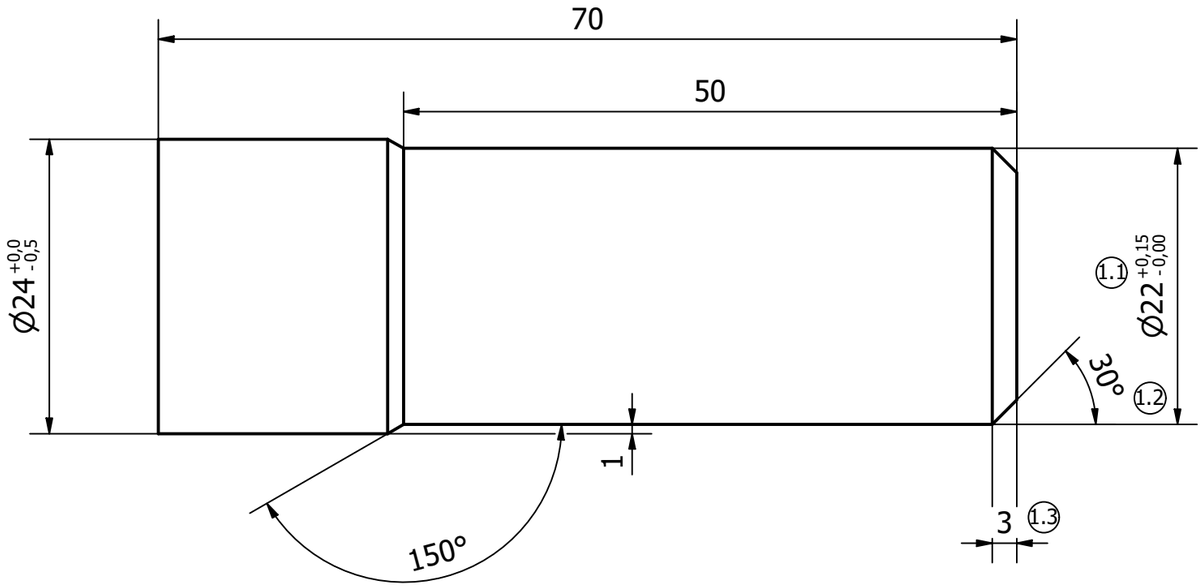

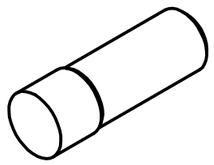

AA	No.	Old value	New value	Area
009/21	1.1	22,5 -0,1/0	22,0 +0,15/0	3B
	1.2	2x45°	30°	3B
	1.3	2x45°	3	3B

V.	Change	Date	Name
#	Change description	Date	Kürzel

Unless otherwise specified:
Dimensions are in millimeters.
General tolerances:
- Plastic moulded parts: DIN ISO 20457:2018
- TG7
- Metal and other plastic parts: DIN ISO 2769-fH

Material to comply with
RoHS Directive 2011/65/EU incl. 2015/863/EU

ERGOSANA
SCHILLER GROUP
Ganshorn Medizin Electronic GmbH
Industriestraße 6-8, D-97618 Niederlauer, Germany

Material
1.0711 (9s20k)

Scale
2 : 1

Approved by

Title
Saddle mounting pin

ERG-Article-Nr.
21-10-803-A2

Dept.R&D
Abteilung

Sheet
1

Proprietary and confidential.
The information contained in this drawing is the sole property of Ganshorn Medizin Electronic GmbH. Any reproduction in part or as a whole without the written permission of Ganshorn Medizin Electronic GmbH is prohibited.