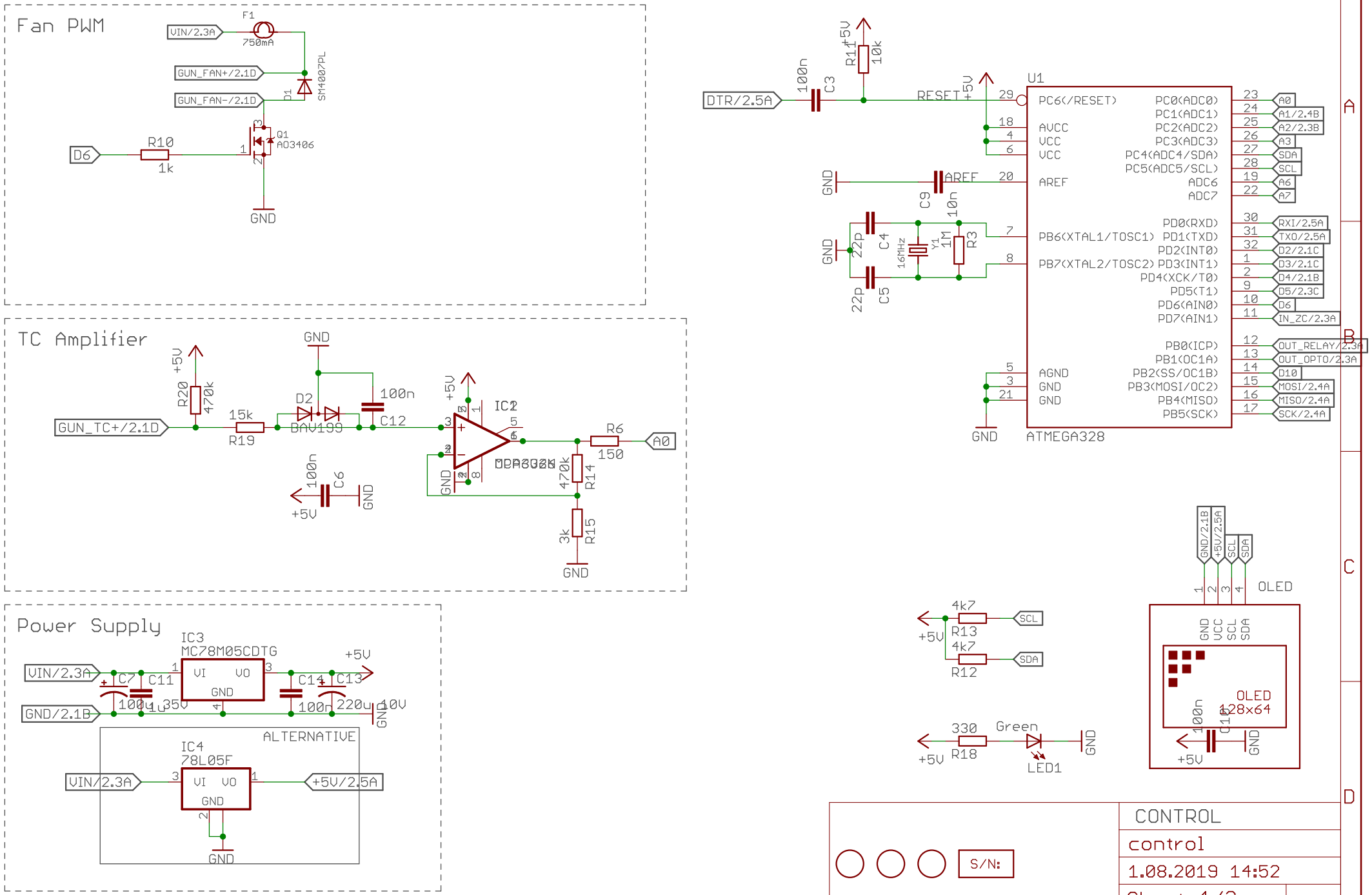
Fan PWM
VIN/2.3A
F1
750mA
GUN_FAN+/2.1D
GUN_FAN-/2.1D
D1
SM4007PL
Q1
AO3406
D6
R10
1k
GND
TC Amplifier
GND
+5V
R20
470k
GUN_TC+/2.1D
15k
R19
D2
BAV199
100n
C12
IC2
OPA2320
R6
150
A0
470k
R14
3k
R15
100n
C6
Power Supply
IC3
MC78M05CDTG
VIN/2.3A
GND/2.1B
C7
100u
C11
1u
35V
C14
100n
C13
220u
10V
ALTERNATIVE
IC4
78L05F
+5V/2.5A
DTR/2.5A
100n
C3
R11
10k
RESET
U1
ATMEGA328
AREF
C9
10n
C4
22p
C5
16MHz
Y1
1M
R3
PC6(/RESET)
AVCC
VCC
AREF
PB6(XTAL1/TOSC1)
PB7(XTAL2/TOSC2)
AGND
PC0(ADC0)
PC1(ADC1)
PC2(ADC2)
PC3(ADC3)
PC4(ADC4/SDA)
PC5(ADC5/SCL)
ADC6
ADC7
PD0(RXD)
PD1(TXD)
PD2(INT0)
PD3(INT1)
PD4(XCK/T0)
PD5(T1)
PD6(AIN0)
PD7(AIN1)
PB0(ICP)
PB1(OC1A)
PB2(SS/OC1B)
PB3(MOSI/OC2)
PB4(MISO)
PB5(SCK)
RXI/2.5A
TXO/2.5A
D2/2.1C
D3/2.1C
D4/2.1B
D5/2.3C
IN_ZC/2.3A
OUT_RELAY/2.3A
OUT_OPTO/2.3A
D10
MOSI/2.4A
MISO/2.4A
SCK/2.4A
4k7
R13
R12
SCL
SDA
330
R18
Green
LED1
OLED
GND/2.1B
+5V/2.5A
GND
VCC
OLED
128x64
C16
S/N:
CONTROL
control
1.08.2019 14:52
Sheet: 1/2

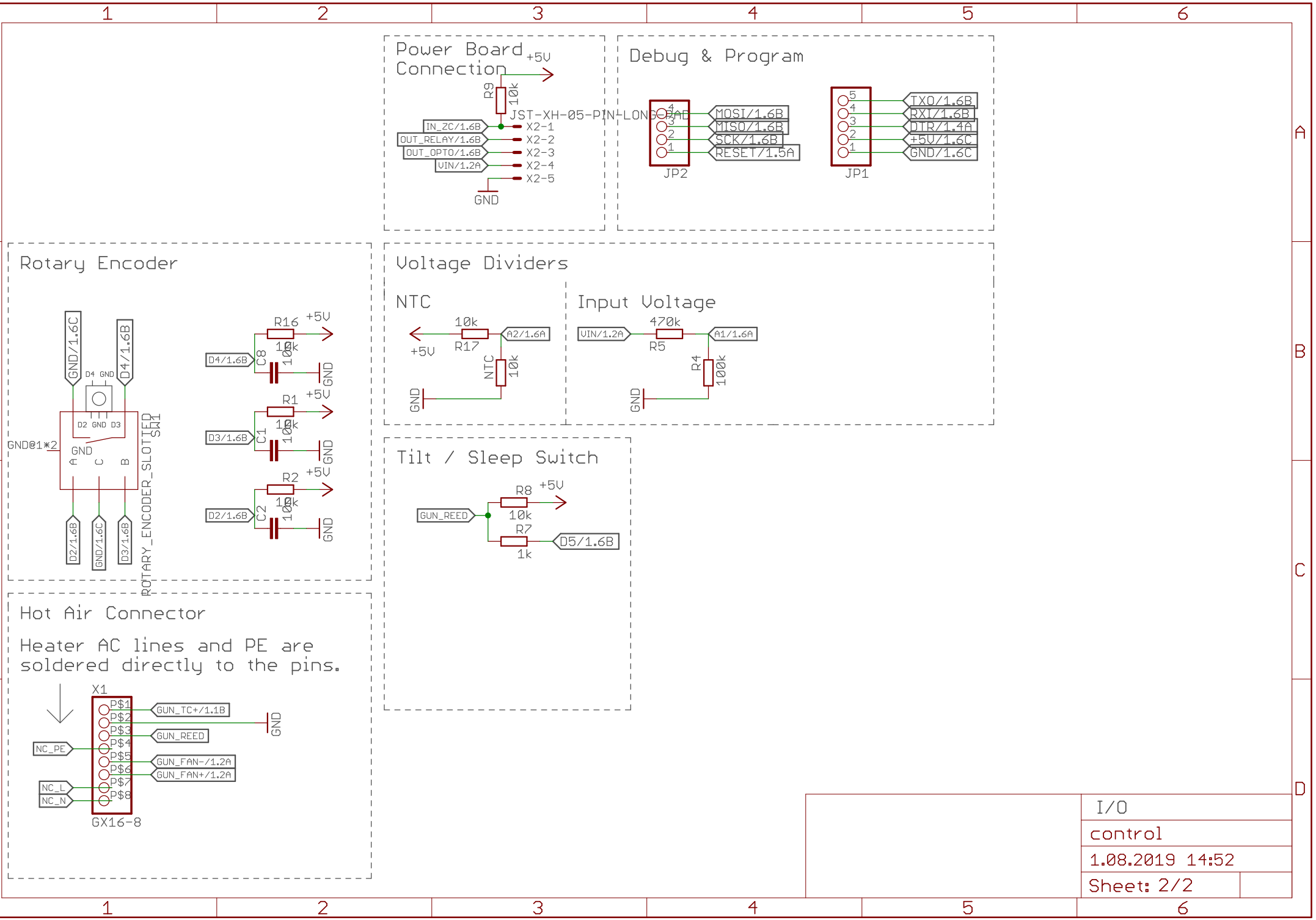
Power Board Connection
+5V
R9
10k
JST-XH-05-PIN-LONGPAD
IN_ZC/1.6B
OUT_RELAY/1.6B
OUT_OPTO/1.6B
VIN/1.2A
X2-1
X2-2
X2-3
X2-4
X2-5
GND
Debug & Program
MOSI/1.6B
MISO/1.6B
SCK/1.6B
RESET/1.5A
JP2
TXO/1.6B
RXI/1.6B
DTR/1.4A
+5V/1.6C
GND/1.6C
JP1
Rotary Encoder
GND/1.6C
D4/1.6B
D4 GND
D2 GND D3
GND@1*2
GND
A C B
D2/1.6B
GND/1.6C
D3/1.6B
ROTARY_ENCODER_SLOTTED
SW1
R16
10k
C8
100n
D4/1.6B
R1
10k
C1
100n
D3/1.6B
R2
10k
C2
100n
D2/1.6B
Voltage Dividers
NTC
10k
R17
A2/1.6A
NTC
10k
Input Voltage
VIN/1.2A
470k
R5
A1/1.6A
R4
100k
Tilt / Sleep Switch
GUN_REED
R8
10k
R7
1k
D5/1.6B
Hot Air Connector
Heater AC lines and PE are soldered directly to the pins.
X1
GX16-8
GUN_TC+/1.1B
GUN_REED
NC_PE
GUN_FAN-/1.2A
GUN_FAN+/1.2A
NC_L
NC_N
I/O
control
1.08.2019 14:52
Sheet: 2/2