USB Port

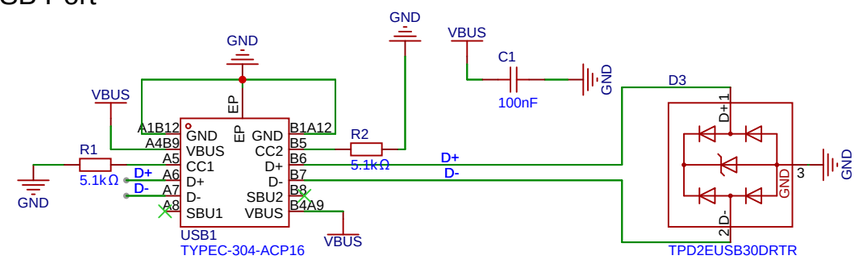

Battery Charger

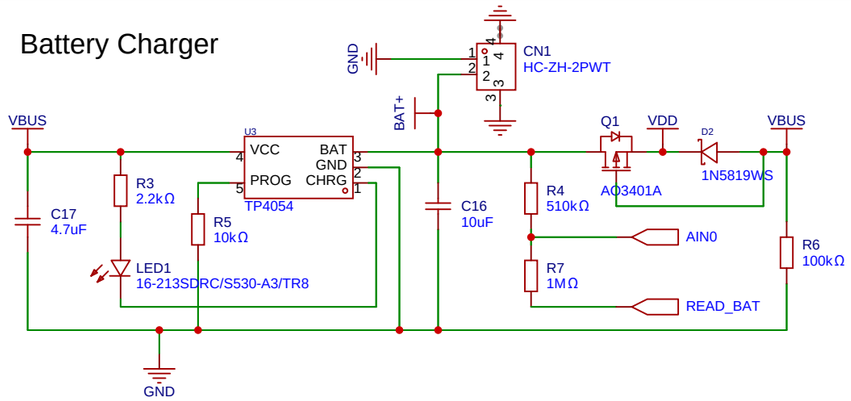

Power

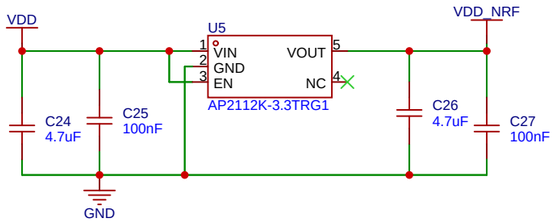

LIS3MDLTR (Address: 0x1C)

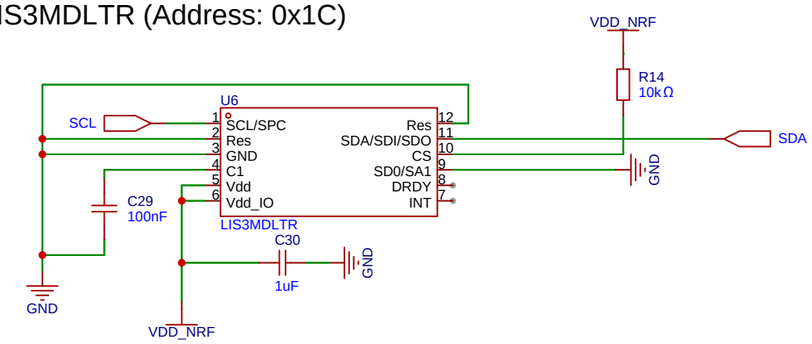

BME680 (Address: 0x76)

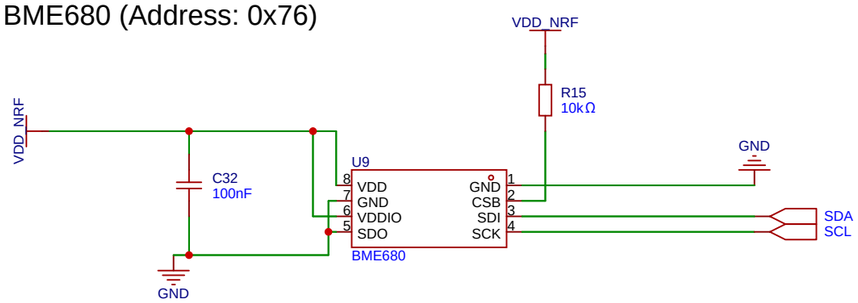

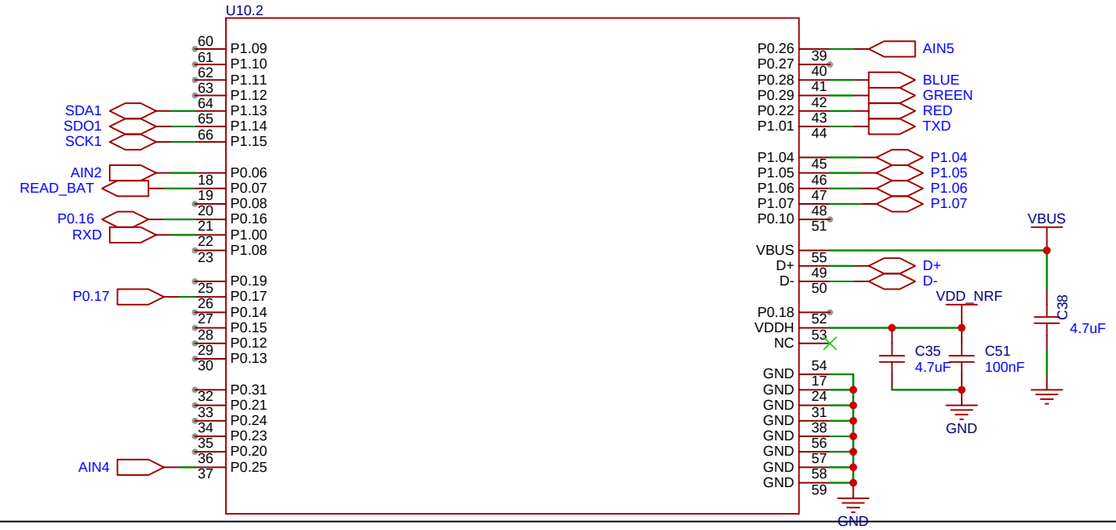

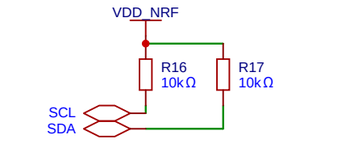

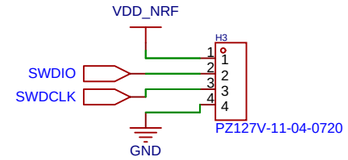

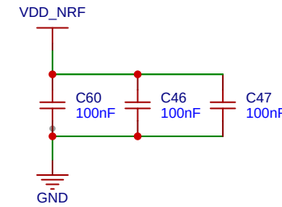

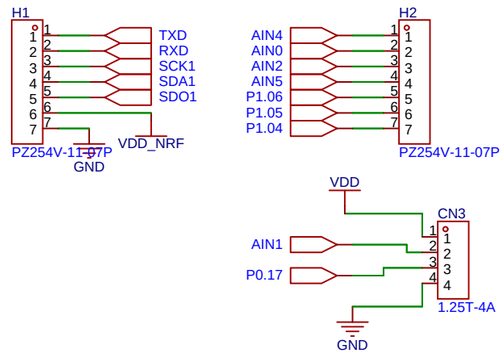

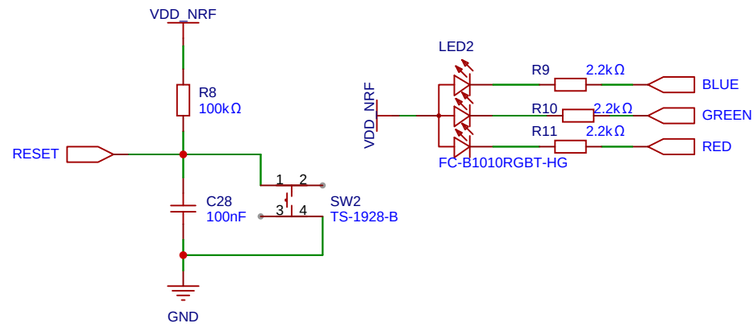

Schematic	Schematic1	Update Date	2024-01-15
		Create Date	2023-10-27
Page	P1	Part Number	XIAO833_001
Drawed	Stephen Long Jr	Tautek_nRF5340	
Reviewed			
		VER	SIZE
		V1.0	A4

PAGE 1 OF 1

EasyEDA