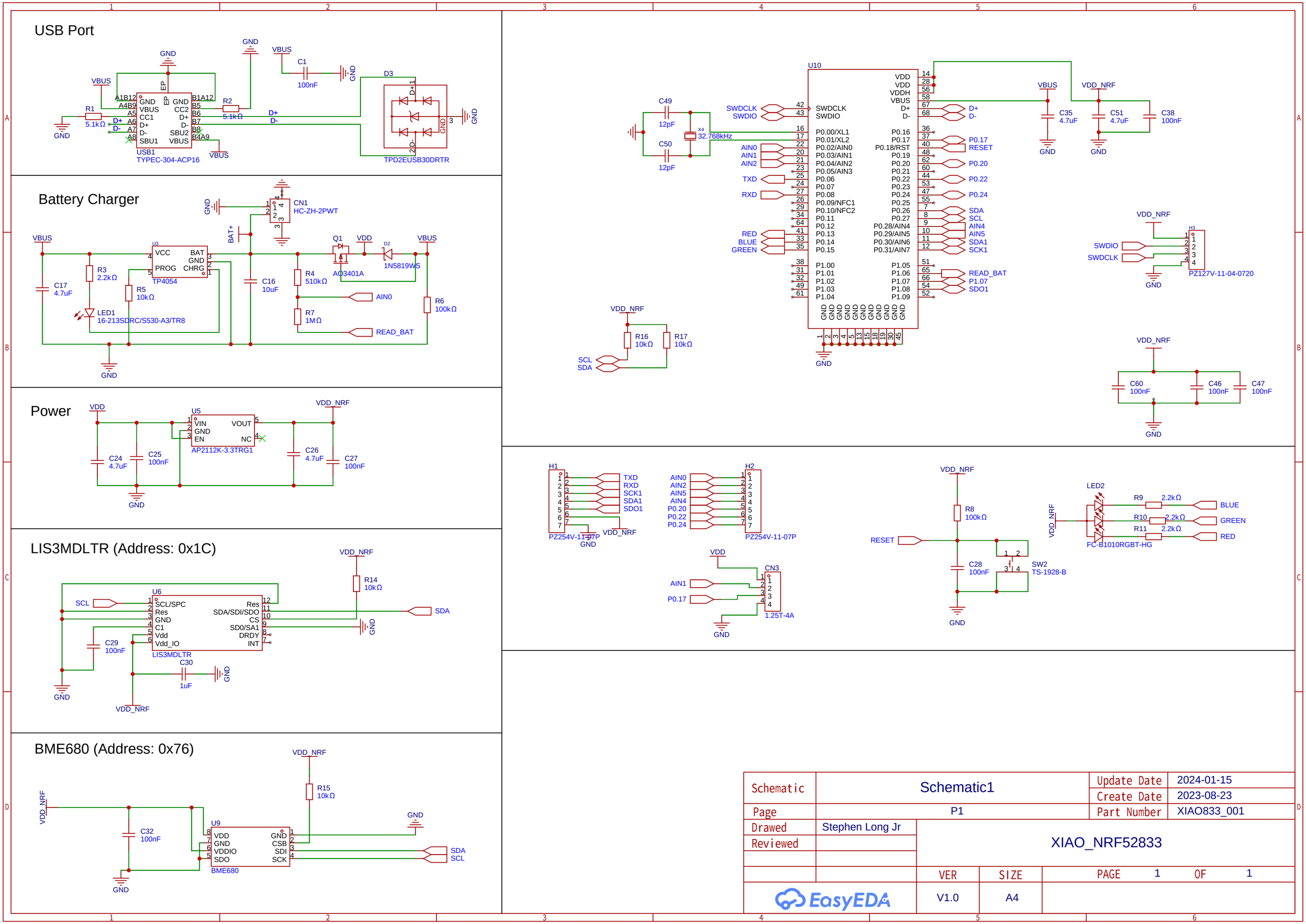
USB Port
USB1
TYPEC-304-ACP16
R1 5.1kΩ
R2 5.1kΩ
C1 100nF
D3
TPD2EUSB30DRTR
Battery Charger
CN1
HC-ZH-2PWT
U3
TP4054
C17 4.7uF
R3 2.2kΩ
R5 10kΩ
LED1
16-213SDRC/S530-A3/TR8
C16 10uF
Q1
AO3401A
D2
1N5819WS
R4 510kΩ
R7 1MΩ
R6 100kΩ
AIN0
READ_BAT
Power
U5
AP2112K-3.3TRG1
C24 4.7uF
C25 100nF
C26 4.7uF
C27 100nF
LIS3MDLTR (Address: 0x1C)
U6
LIS3MDLTR
R14 10kΩ
C29 100nF
C30 1uF
SCL
SDA
BME680 (Address: 0x76)
U9
BME680
R15 10kΩ
C32 100nF
U10
C49 12pF
C50 12pF
X4 32.768kHz
C35 4.7uF
C51 4.7uF
C38 100nF
R16 10kΩ
R17 10kΩ
H3
PZ127V-11-04-0720
C60 100nF
C46 100nF
C47 100nF
H1
PZ254V-11-07P
H2
PZ254V-11-07P
CN3
1.25T-4A
R8 100kΩ
C28 100nF
SW2
TS-1928-B
LED2
FC-B1010RGBT-HG
R9 2.2kΩ
R10 2.2kΩ
R11 2.2kΩ
BLUE
GREEN
RED
Schematic
Schematic1
Update Date
2024-01-15
Create Date
2023-08-23
Page
P1
Part Number
XIAO833_001
Drawed
Stephen Long Jr
Reviewed
XIAO_NRF52833
VER
SIZE
PAGE 1 OF 1
V1.0
A4
EasyEDA