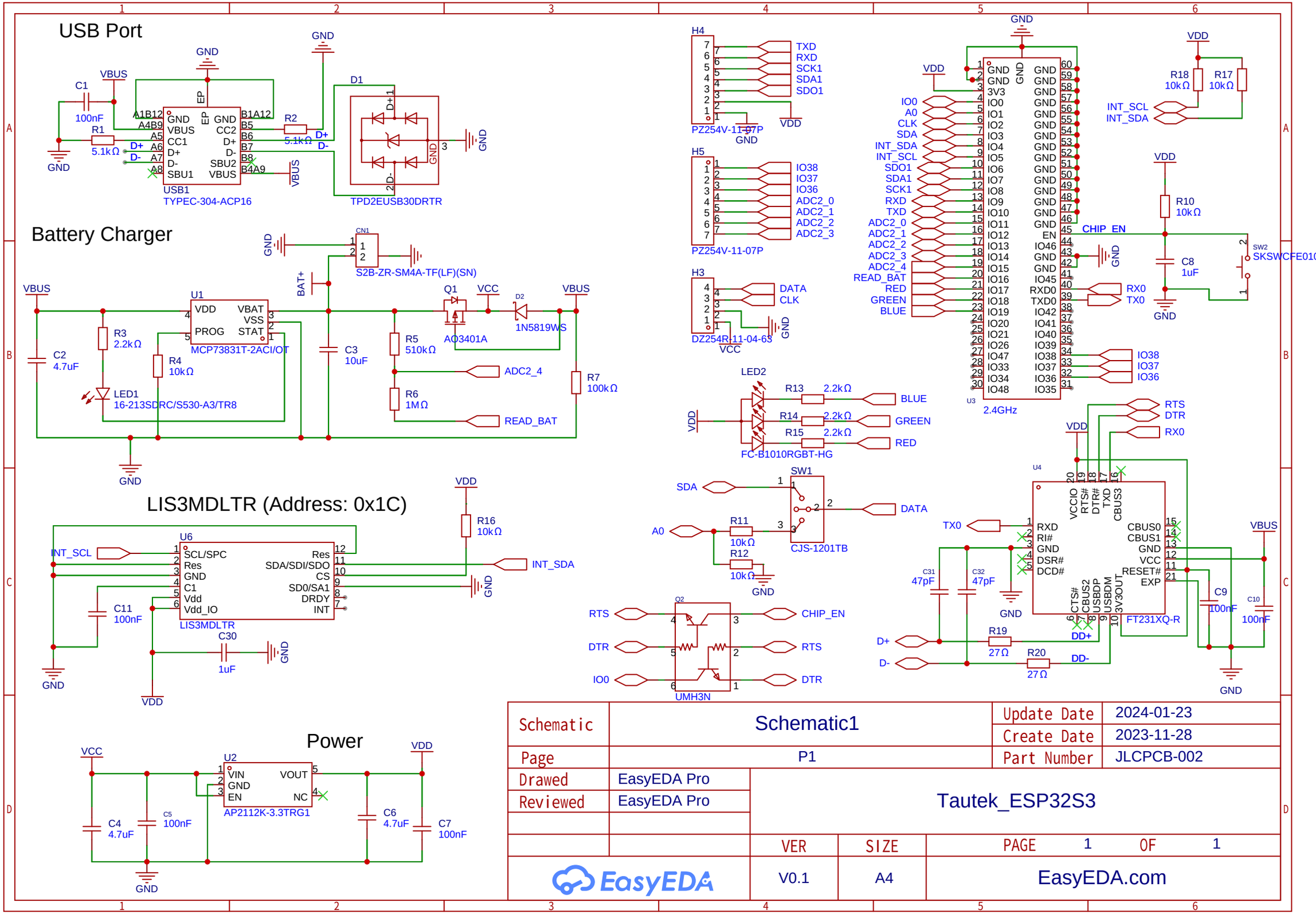
USB Port
USB1
TYPEC-304-ACP16
D1
TPD2EUSB30DRTR
Battery Charger
CN1
S2B-ZR-SM4A-TF(LF)(SN)
U1
MCP73831T-2ACI/OT
Q1
AO3401A
D2
1N5819WS
LED1
16-213SDRC/S530-A3/TR8
LIS3MDLTR (Address: 0x1C)
U6
LIS3MDLTR
Power
U2
AP2112K-3.3TRG1
H4
PZ254V-11-07P
H5
PZ254V-11-07P
H3
DZ254R-11-04-63
U3
2.4GHz
LED2
FC-B1010RGBT-HG
SW1
CJS-1201TB
Q2
UMH3N
U4
FT231XQ-R
SW2
SKSWCFE010
Schematic
Schematic1
Update Date
2024-01-23
Create Date
2023-11-28
Page
P1
Part Number
JLCPCB-002
Drawed
EasyEDA Pro
Reviewed
EasyEDA Pro
Tautek_ESP32S3
VER
SIZE
PAGE 1 OF 1
V0.1
A4
EasyEDA.com