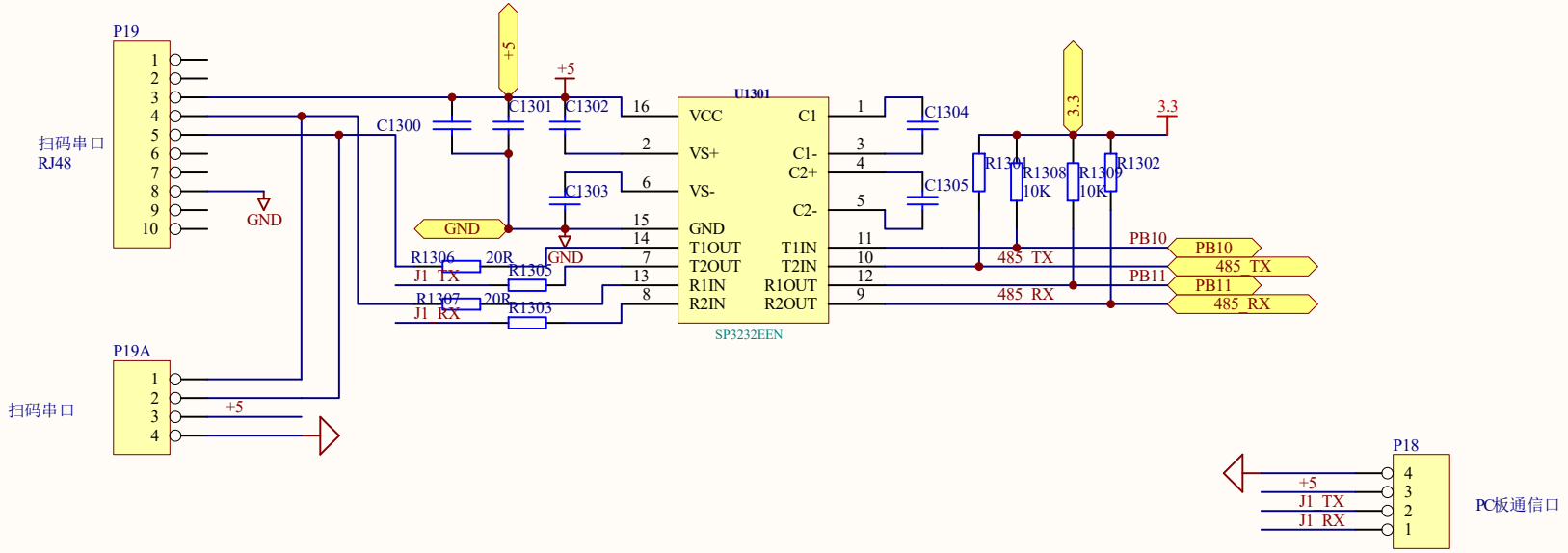

Title	出货板RS485总线通讯		
Size: A4	Number: 1	Revision: V1.0	
Date: 11-Sep-2018	Time: 16:36:06	Sheet 1 of 1	
File: C:\浙江嘉丰机电有限公司\披萨机\披萨机.ddb - 出货控制板\RS485.sch			

Error : newAltmLogo.bmp file ne