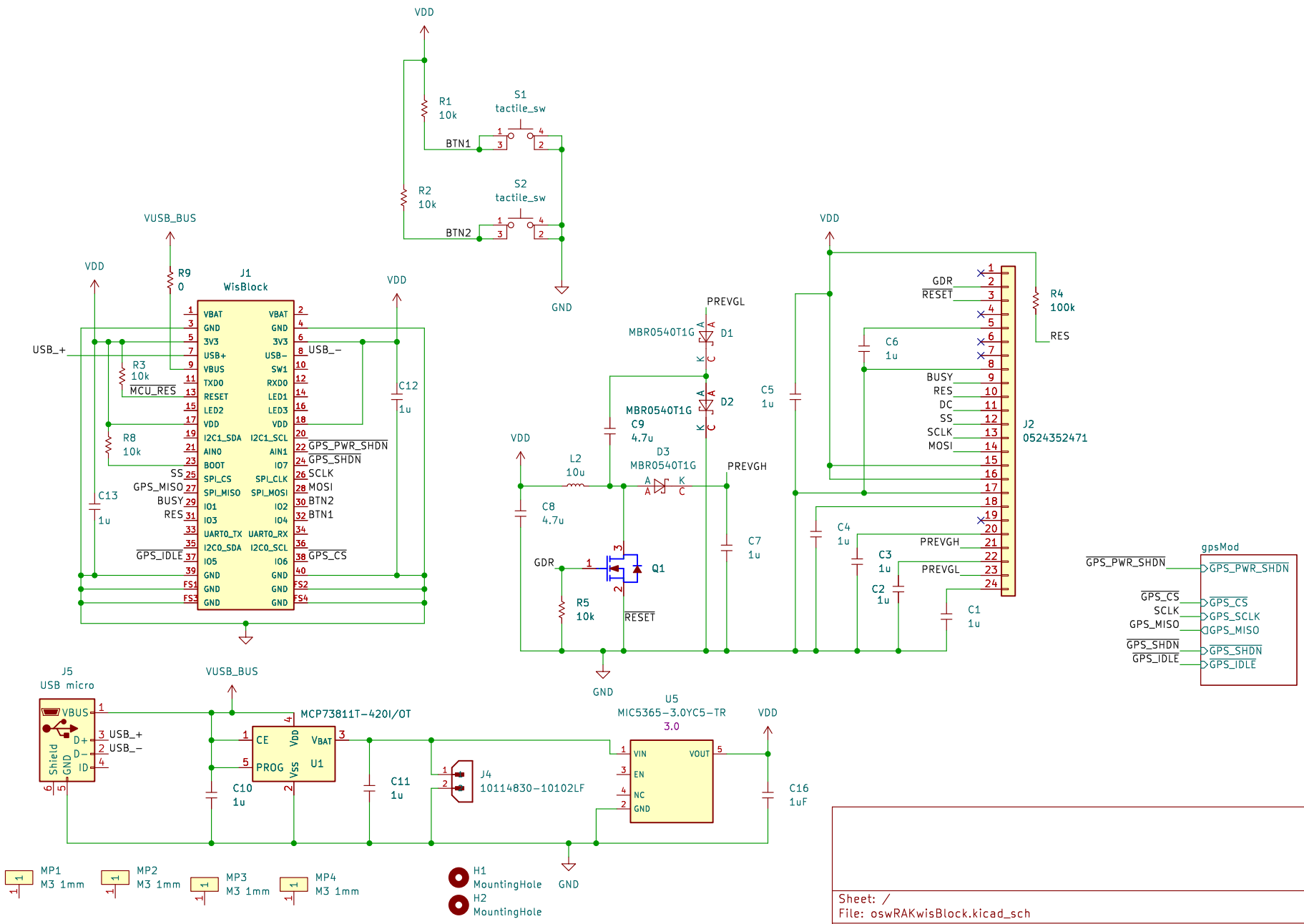

Sheet: /
File: oswRAKwisBlock.kicad_sch

Title:

Size: A4	Date:	Rev:
KiCad E.D.A. 8.0.1		Id: 1/2

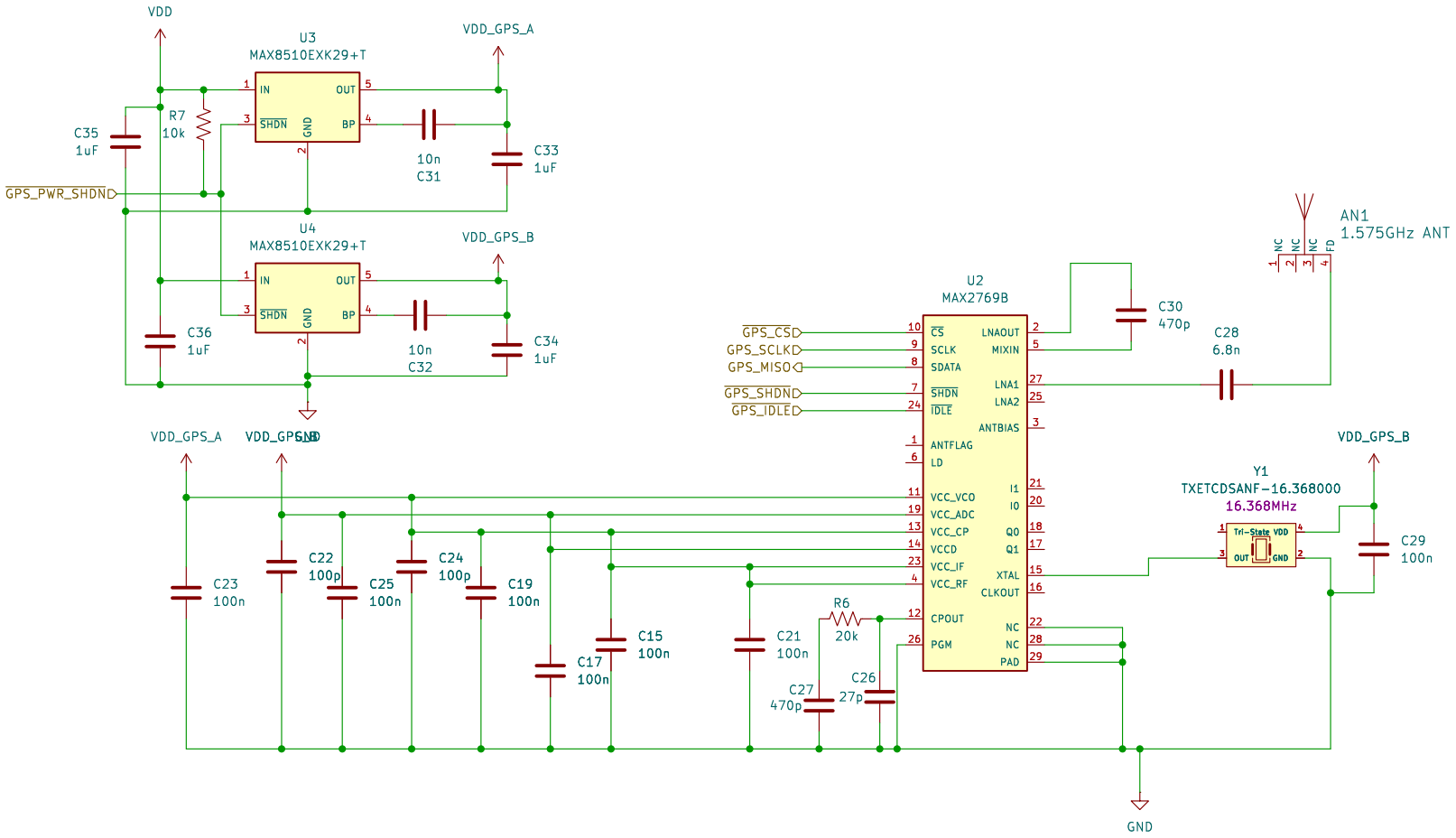

Sheet: /gpsMod/
File: gpsMod.kicad_sch

Title:

Size: A4	Date:	Rev:
KiCad E.D.A. 8.0.1		Id: 2/2