Analog Optical Signal Processing for Astronomical Events

Jennita Rachel A

I. Aim/Objective:

The aim of this mini project is to create an analog circuit system that would detect and classify the optical signals from the astronomical events by processing them through various stages in the system.

II. Working principle:

The system works in the following stages:

1) Two Transimpedance amplifiers: The light from the astronomical events are captured and converted into current using photodiodes. This current is then converted to voltage.

$$V_o = -I_i \times R_f$$

2) Differential amplifier: This acts as a common mode rejection stage

$$V_o = A_d(V_i^+ - V_i^-)$$

removing the noise common to both the photodiodes like light pollution.

3) Logarithmic amplifier: The output from the differential amplifier after offset is fed into this which gives the brightness ratio within the manageable range-without getting saturated or missing out.

$$V_o = -V_T \ln\left(\frac{V_i}{I_s \cdot R}\right)$$

4) The output from the differential amplifier is supplied into 2 stages:

a. Differentiator path:

i. **Differentiator:** This detects rapidly changing events ($< 4.7\mu s$) by generating output proportional to the rate of change of light intensity.

$$V_o = -RC \cdot \frac{dV_i}{dt}$$

ii. **Non-inverting amplifier:** The output of the differentiator is amplified to make it work within the Schmitt trigger limits.

$$V_o = V_i \times (1 + \frac{R_2}{R_1})$$

iii. **Schmitt Trigger:** This creates a switching between upper and lower threshold voltages. This ensures each sustained event generate a pulse (say 4V).

b. Integrator path:

i. **Offset:** The output from the differential amplifier is added some offset to prevent the signal to be at 0V when being fed to the integrator.

ii. **Integrator:** This detects sustained events ($> 0.1s$) by generating output as integration.

$$V_o = -\frac{1}{RC}\int V_i \, dt$$

iii. **Non-inverting amplifier:** The output of the integrator is amplified to make it work within the Schmitt trigger limits.

$$V_o = V_i \times (1 + \frac{R_2}{R_1})$$

iv. **Offset:** The offset is used to make the output of the non-inverting amplifier have equal swing in order to make it work within the Schmitt trigger limits.

v. **Schmitt Trigger:** This creates a switching between upper and lower threshold voltages. This ensures each sustained event generate a pulse (say 2V).

5) Summing amplifier: The 4V from the differentiator path (fast changing events) and 2V from the integrator path (sustained event) are summed up.

$$V_o = -R_f\left(\frac{V_1}{R_1} + \frac{V_2}{R_2}\right)$$

6) Inverting amplifier: The output of the summing amplifier leads to negative voltages. To visualize better inverting amplifier was used.

$$V_o = -V_i \times \frac{R_f}{R_i}$$

giving rise to the following possibilities:

- 2V: Sustained events - variable stars, planetary transits, comet brightening
- 4V: Fast changing events - meteor streaks, satellite flares, optical bursts
- 6V: Complex event - meteors with persistent trains, complex multi-stage events
- 0V: No detection - no significant astronomical event detected

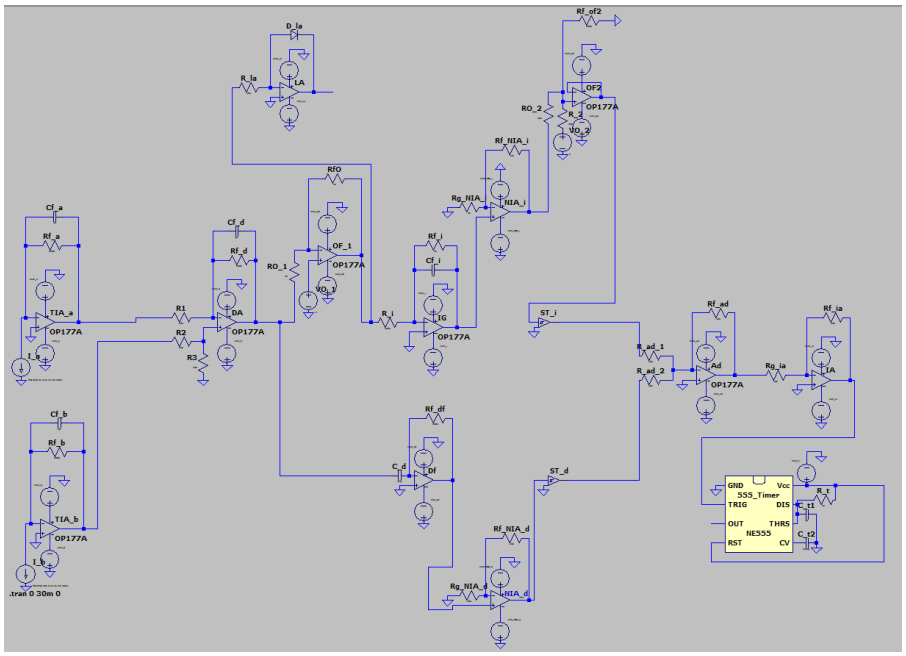

Figure 1: Overall circuit diagram of the system

7) 555 timer: The output from the inverting amplifier is inputted into the 555 timer to generate equally spaced pulses to count the number of occurrences of complex events.

III. Discussion:

- Differentiator used $\tau = 4.7\,\mu s$ ($R = 100\,\mathrm{k}\Omega \times C = 47\,\mathrm{pF}$) for fast changes, whereas integrator used $\tau = 0.1\,\mathrm{s}$ ($R = 100\,\mathrm{k}\Omega \times C = 1\,\mu\mathrm{F}$) for sustained events.
- The OP177 is a high-precision operational amplifier and is therefore used for stability and accuracy.
- The output of the inverted summing of Schmitt triggers gives the event classification ,whereas,the pulse count of the 555 timer output gives us the number of complex events.

IV. Suggestions to improve:

- Adaptive threshold of Schmitt trigger based on sky conditions.
- Automatic offset calibration to prepare the signal for Schmitt Trigger.
- Temperature dependence of most of the elements can be reduced by using FETs.

V. Utility:

- Used to distinguish and categorise the events.
- Used for photometric analysis in astronomy.
- Helps in monitoring the celestial changes for scientific research and discovery.

VI. Flowchart of Working Principle:

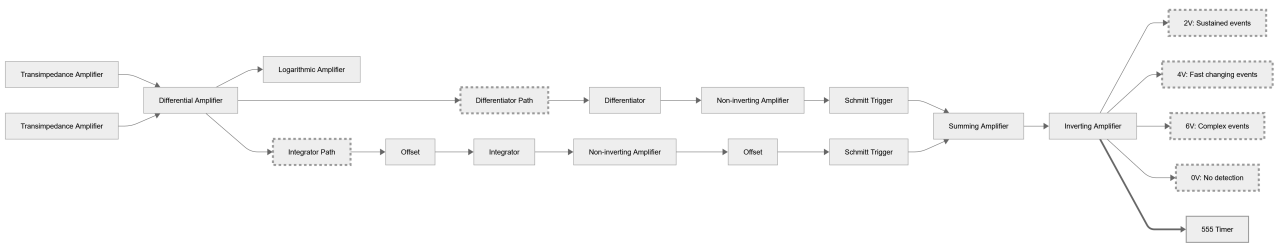

Figure 2: Working Principle Flowchart

VII. Inputs and the key outputs:

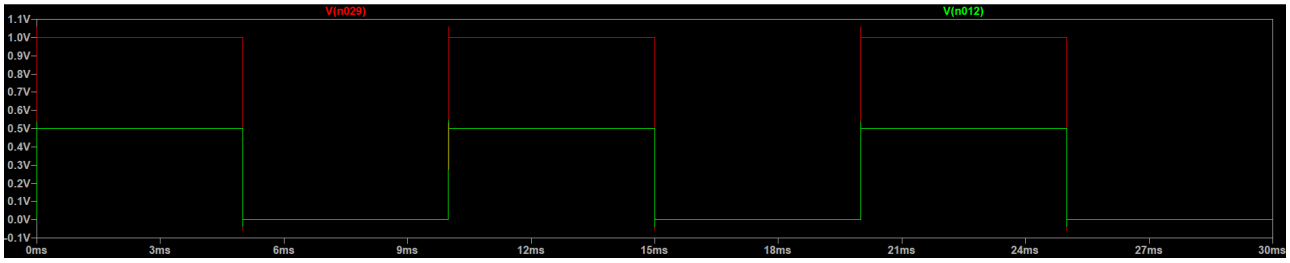

Figure 3: Input from the two Transimpedance amplifiers

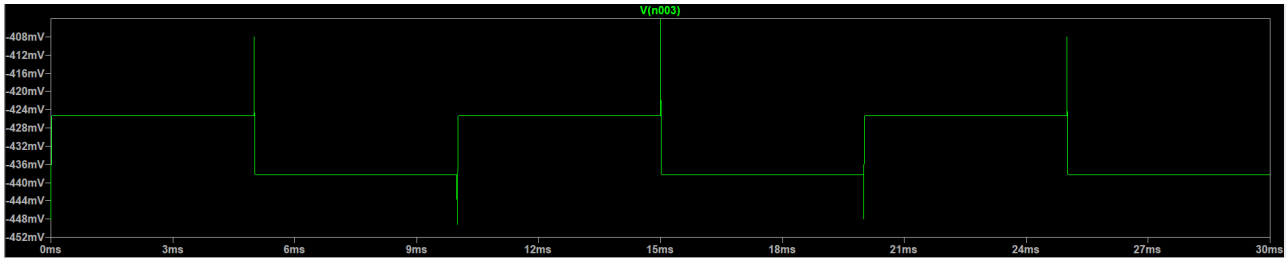

Figure 4: Output of the Logarithmic amplifier (brightness weightage)

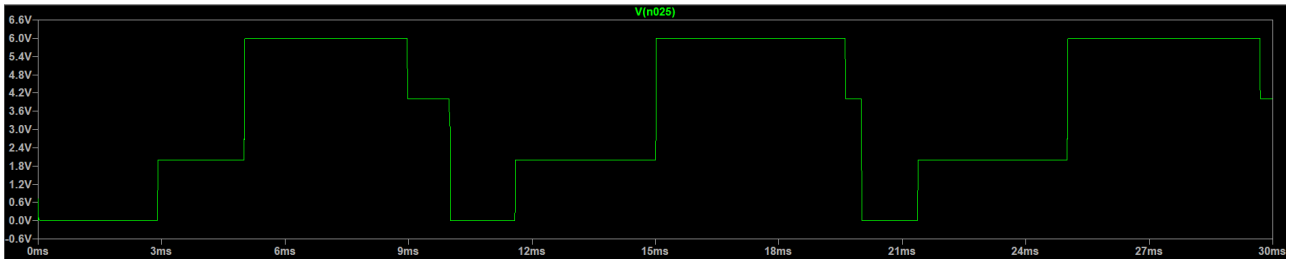

Figure 5: Output from summing of Schmitt trigger (event classification)

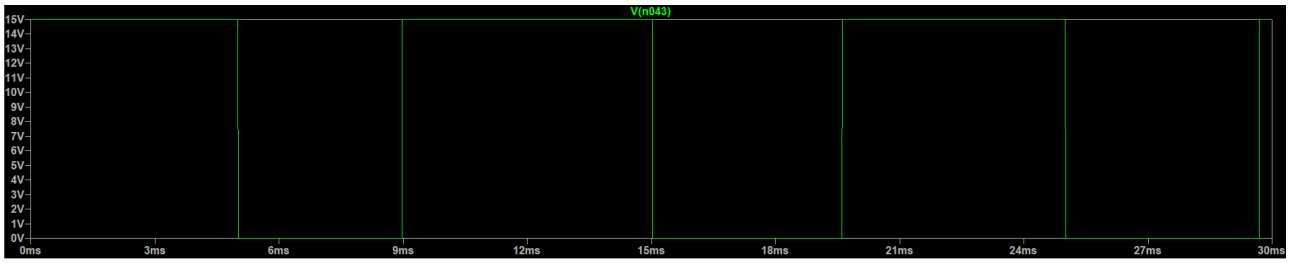

Figure 6: Output from 555 timer (count of complex events)