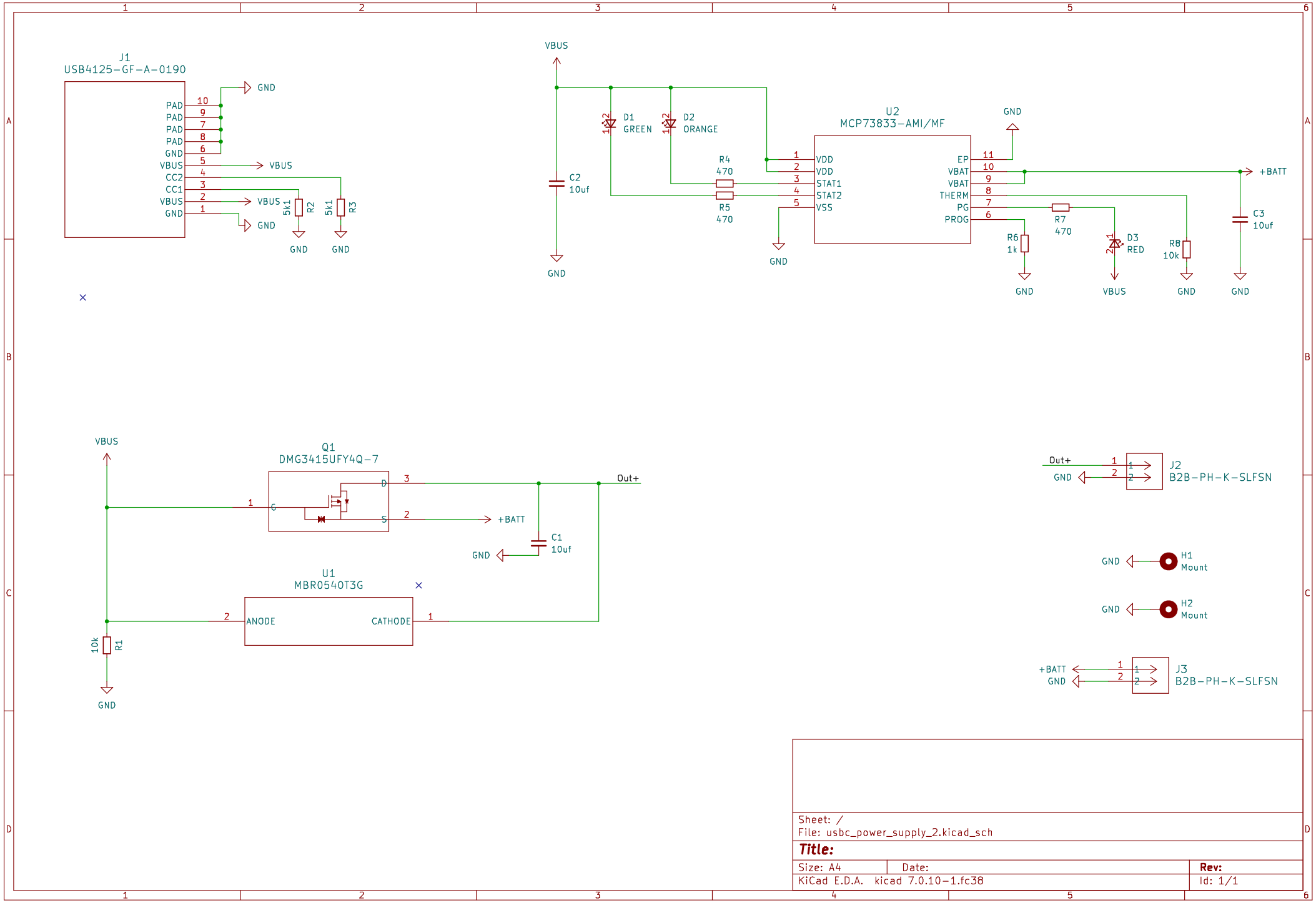

Sheet: /
File: usbc_power_supply_2.kicad_sch

Title:

Size: A4	Date:	Rev:
KiCad E.D.A. kicad 7.0.10-1.fc38		Id: 1/1