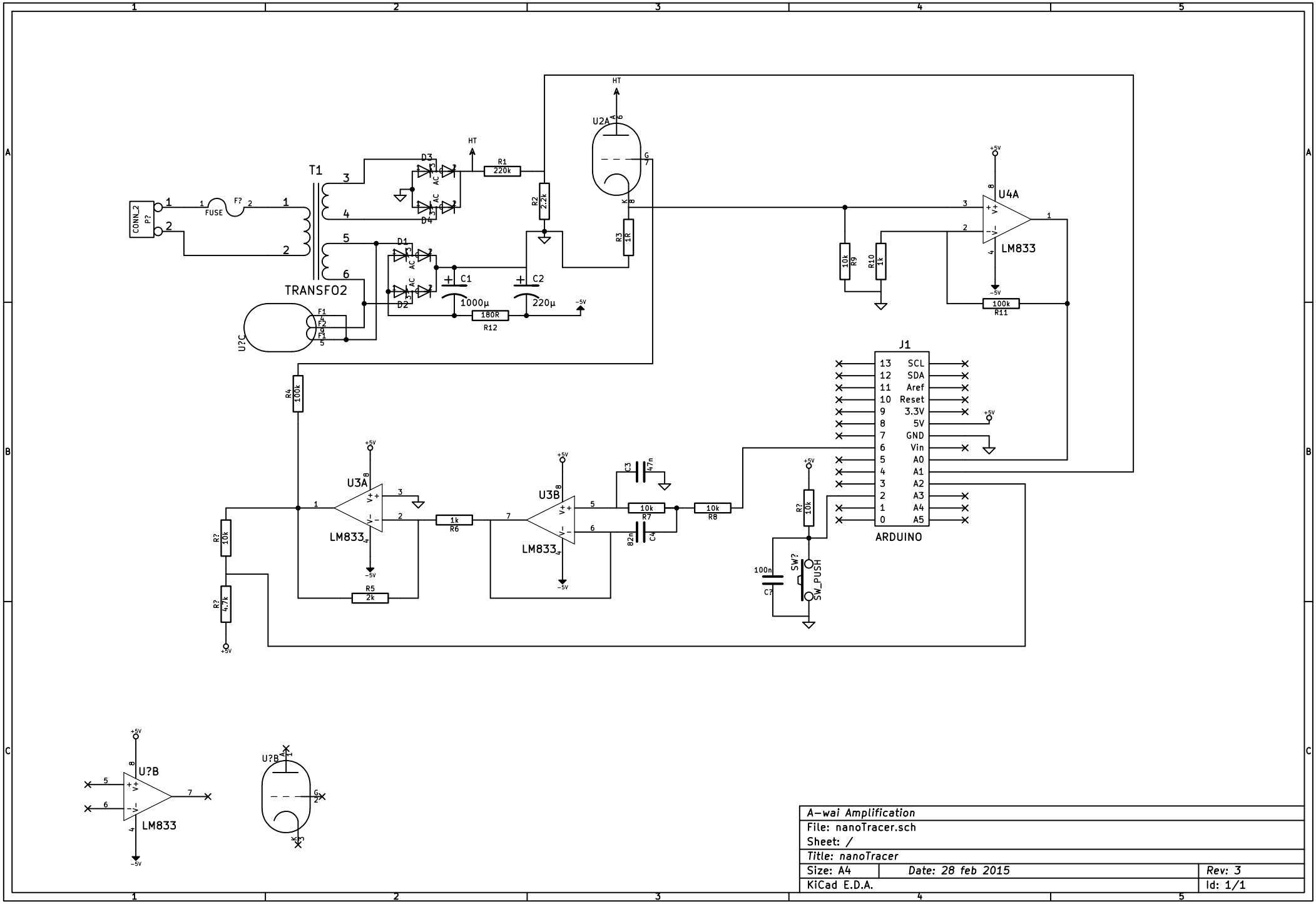

A-wai Amplification		
File: nanoTracer.sch		
Sheet: /		
Title: nanoTracer		
Size: A4	Date: 28 feb 2015	Rev: 3
KiCad E.D.A.		Id: 1/1