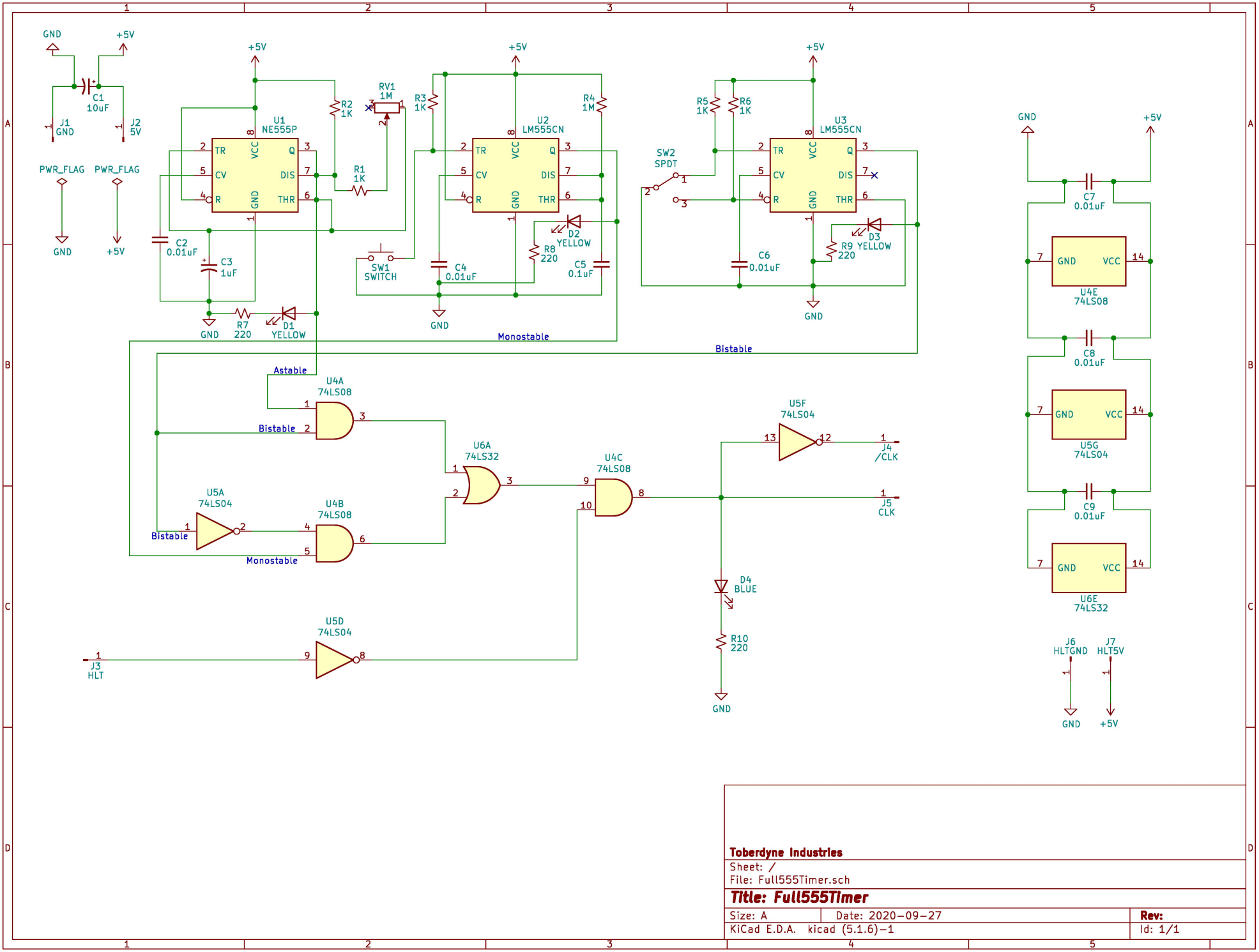

Toberdyne Industries

Sheet: /

File: Full555Timer.sch

Title: Full555Timer

Size: A	Date: 2020-09-27	Rev:
KiCad E.D.A. kicad (5.1.6)-1		Id: 1/1