Automated Parameter Tuning for Timing Closure in OpenROAD/OpenLane: A Grid Search Framework on the SkyWater 130 nm PDK

[Your Full Name]
Department of Electrical and Electronic Engineering
Your University Name
, Dhaka, Bangladesh
[your.email@university.edu.bd]

***Abstract*—Timing closure in open-source RTL-to-GDSII flows requires iterative manual adjustment of physical design parameters, a process that is time-consuming and experience-dependent. This paper presents an automated grid search framework that systematically explores the parameter space of the OpenROAD/OpenLane flow targeting the SkyWater 130 nm process design kit (SKY130A). The framework varies three key configuration parameters—clock period, core utilization, and placement target density—across a structured $6 \times 5 \times 3$ grid, executing each combination as a complete RTL-to-GDSII run and logging worst negative slack (WNS), total negative slack (TNS), core area, and power dissipation. Experiments on the *spm* benchmark design reveal that the default OpenLane configuration fails timing closure at 250 MHz with WNS = -50 ps, while all tested configurations achieve closure at 200 MHz. The framework further characterizes the area–power tradeoff across 90 configurations, identifying a 37.2% area reduction by increasing core utilization from 35% to 55% at equivalent timing performance. Dynamic power scales linearly with frequency, decreasing by 51.6% from 250 MHz to 125 MHz. All scripts and results are released as open source to support reproducible research in open-source EDA.**

***Index Terms*—OpenLane, OpenROAD, SKY130, timing closure, physical design automation, parameter sweep, grid search, EDA, open-source ASIC**

I. Introduction

The democratization of custom silicon design through open-source electronic design automation (EDA) tools has opened ASIC implementation to researchers, students, and small teams who previously lacked access to commercial flows. The OpenLane automated RTL-to-GDSII flow [1], built upon the OpenROAD infrastructure [2] and targeting the SkyWater 130 nm PDK (SKY130A) [3], provides a complete, script-driven path from Verilog to manufacturable GDSII without license fees.

Despite this accessibility, achieving timing closure—ensuring that every register-to-register path satisfies its setup and hold constraints—remains a significant practical challenge. OpenLane exposes over 200 configuration variables controlling synthesis strategy, floorplan geometry, placement density, and routing aggressiveness. In practice, engineers must manually tune a subset of these variables and re-run the full flow, which takes 5–20 minutes per iteration depending on design complexity. No systematic, automated framework for this parameter exploration has been published for OpenLane on SKY130.

This paper makes the following contributions:

1) A Python-based automated grid search framework that drives the full OpenLane Docker flow without human intervention, varying clock period, core utilization, and placement density across a 6×5×3 parameter grid of 90 runs per design.
2) A fault-tolerant metrics extraction pipeline that parses OpenLane timing reports and logs WNS, TNS, post-SPEF WNS, area, cell count, critical path delay, and power to a machine-readable CSV after each run, with automatic resume support for interrupted sweeps.
3) A quantitative characterization of the timing–area–power tradeoff space for the *spm* benchmark on SKY130A, establishing that the timing closure boundary lies between 200 MHz and 250 MHz for this design within the tested parameter space.
4) Open-source release of all sweep scripts, configuration files, and raw results at https://github.com/[your-repo] to enable full reproducibility.

II. Related Work

OpenLane was introduced by Efabless Corporation as a fully automated, tapeout-proven RTL-to-GDSII flow for the SkyWater 130 nm PDK, built on OpenROAD, Yosys, Magic, and Netgen [1]. The OpenROAD project targets 24-hour, no-human-in-the-loop design closure [2]. Prior published work using OpenLane has primarily demonstrated novel RTL designs—including RISC-V cores such as PicoRV32 [5], cryptographic accelerators, and neural network inference engines—without systematically characterizing the impact of physical design parameters on timing closure.

Machine learning approaches to physical design parameter optimization have been explored in commercial contexts, including Bayesian optimization for logic synthesis [6] and reinforcement learning for floorplanning [7]. These methods require training data and assume proprietary tool interfaces, making them difficult to apply in open-source flows. The grid search framework proposed here requires no training data, is

TABLE I
SPM BASELINE METRICS (DEFAULT OPENLANE CONFIG)

Metric	Value
Technology	SKY130A (130 nm)
Standard cell lib.	sky130_fd_sc_hd
Clock period	10 ns (100 MHz)
WNS	0.0 ps
TNS	0.0 ps
Synthesized cells	272
Core area	7,136 μm^2
Critical path	2.82 ns

fully transparent, and produces a complete characterization of the search space as a direct research contribution.

To our knowledge, no prior work has published an automated parameter sweep framework specifically targeting timing closure in the OpenLane/OpenROAD flow on SKY130. This paper fills that gap with a reproducible, open-source implementation.

III. EXPERIMENTAL SETUP

A. Tool Environment

All experiments were conducted using OpenLane v1.0.2 (commit `ff5509f`) with the SKY130A PDK and the `sky130_fd_sc_hd` high-density standard cell library. The flow was executed inside the official OpenROAD Project Docker container on Ubuntu 22.04 with an Intel-compatible host CPU and 16 GB RAM. Docker containers were invoked programmatically from Python 3.8 via `subprocess.run()`, with no interactive steps between runs.

B. Benchmark Design

spm—A 32-bit serial-parallel multiplier implemented as a synchronous accumulator. The design synthesizes to 272 standard cells with a core area of 7,136 μm^2 under the default configuration. The critical path delay is 2.82 ns, giving a theoretical maximum frequency of approximately 354 MHz. Table I summarizes the baseline metrics.

IV. PROPOSED METHODOLOGY

A. Parameter Search Space

Three OpenLane configuration parameters were selected based on their direct influence on timing closure and area–power tradeoffs:

`CLOCK_PERIOD`—The target clock period in nanoseconds. Six values: $\{4.0, 5.0, 6.0, 7.0, 8.0, 10.0\}$ ns ($\{250, 200, 167, 143, 125, 100\}$ MHz).

`FP_CORE_UTIL`—Core utilization percentage. Five values: $\{35, 40, 45, 50, 55\}\%$.

`PL_TARGET_DENSITY`—Global placement density. Three values: $\{0.4, 0.5, 0.6\}$.

The full Cartesian product yields 90 unique configurations per design. Each was executed as a complete RTL-to-GDSII run including synthesis, floorplan, placement, CTS, global and detail routing, and post-SPEF static timing analysis.

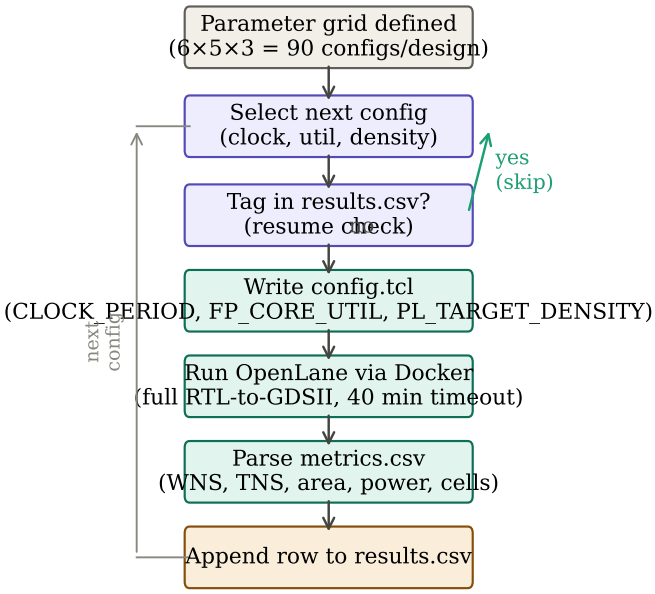

Fig. 1. Proposed automated parameter sweep framework.

Fig. 1. Proposed automated parameter sweep framework. The resume check enables fault-tolerant execution across interrupted runs.

B. Automation Framework

Fig. 1 illustrates the proposed framework. The Python 3.8 orchestration script performs four steps per configuration: (1) writes a `config.tcl` encoding the selected parameters; (2) invokes the OpenLane Docker container via `subprocess.run()` with a 40-minute timeout; (3) parses the `metrics.csv` report, extracting WNS, TNS, post-SPEF WNS, core area, synthesis cell count, critical path delay, and power dissipation; and (4) appends a timestamped row to a master results CSV.

The framework detects completed runs by comparing deterministic run tags against existing CSV entries, enabling safe interruption and resumption without duplicate runs. Run tags encode all parameter values (e.g., `sw016_c50_u35_d4` denotes CLOCK_PERIOD = 5.0 ns, FP_CORE_UTIL = 35%, PL_TARGET_DENSITY = 0.4), ensuring full traceability. LVS and DRC checks were disabled to focus runtime on timing-relevant flow stages.

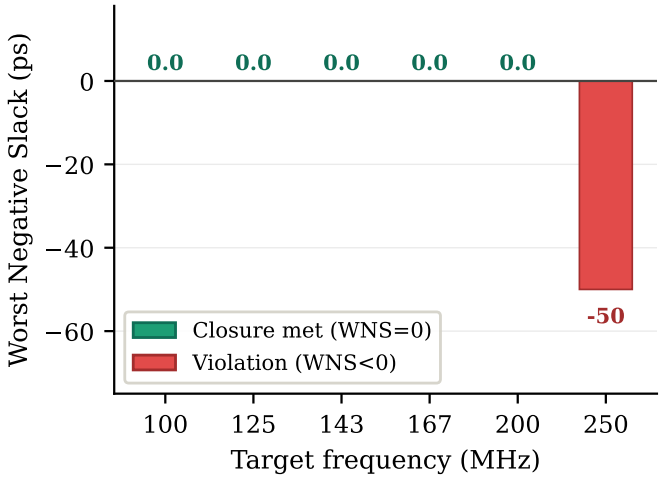

Fig. 2. Best WNS per target frequency across all 15 parameter combinations at each clock period. All configurations fail at 250 MHz; all pass at 200 MHz and below.

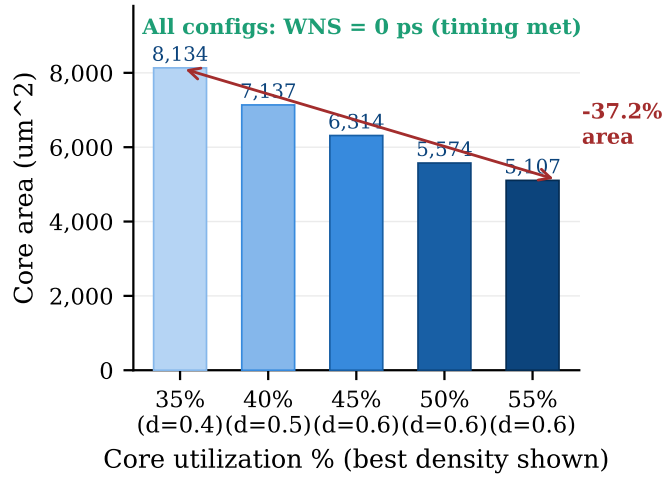

Fig. 3. Core area vs. core utilization at 200 MHz. All five configurations achieve timing closure (WNS = 0 ps). A 37.2% area reduction is available from 35% to 55% utilization.

TABLE II
BEST WNS PER TARGET FREQUENCY – SPM ON SKY130A

Clock (ns)	Freq. (MHz)	Best WNS (ps)	Area (μm^2)	Status
10.0	100	0.0	7,136	Closed
8.0	125	0.0	8,134	Closed
7.0	143	0.0	8,134	Closed
6.0	167	0.0	8,134	Closed
5.0	200	0.0	8,134	Closed
4.0	250	−50	5,107–8,134	**All fail**

TABLE III
PPA TRADEOFF AT 200 MHZ – TIMING-CLOSURE CONFIGURATIONS

Util. (%)	Density	WNS (ps)	Area (μm^2)	Power (μW)
35	0.4	0.0	8,134	1.962
40	0.5	0.0	7,137	1.942
45	0.6	0.0	6,314	1.956
50	0.6	0.0	5,574	1.919
55	0.6	0.0	5,107	1.942

C. Evaluation Metrics

The primary metric is WNS after post-route, SPEF-extracted static timing analysis at the nominal process corner. WNS = 0.0 ps indicates full timing closure; negative values indicate the worst setup violation magnitude. Secondary metrics are TNS, core area (μm^2), and dynamic power (μW) at the typical corner.

V. EXPERIMENTAL RESULTS

A. Timing Closure Boundary

Fig. 2 and Table II present the best WNS achieved at each target frequency across all 90 parameter combinations. The results reveal a sharp timing closure boundary: *all* 15 configurations at 200 MHz (5.0 ns) achieve WNS = 0.0 ps, while *all* 15 at 250 MHz (4.0 ns) fail with WNS = −50 ps regardless of utilization and density settings.

This indicates that the critical path delay of 2.82 ns cannot be reduced below approximately 4.0 ns by parameter adjustment alone. This *negative result* is informative: it directs designers toward architectural or RTL-level changes rather than continued physical parameter tuning, and the sweep identifies this boundary efficiently without human intervention across 90 runs.

B. Area–Power Tradeoff at 200 MHz

Among the 15 configurations achieving timing closure at 200 MHz, Fig. 3 and Table III show the PPA characteristics. Increasing core utilization from 35% to 55% reduces die area from 8,134 μm^2 to 5,107 μm^2—a **37.2% area reduction**—while maintaining WNS = 0.0 ps. This tradeoff is directly actionable for area-constrained designs.

C. Power Scaling with Frequency

Fig. 4 and Table IV characterize power dissipation across target frequencies using `FP_CORE_UTIL` = 35%, `PL_TARGET_DENSITY` = 0.4. Dynamic power decreases from 2.44 μW at 250 MHz to 1.18 μW at 125 MHz—a **51.6% reduction**—confirming expected near-linear power–frequency scaling ($P \propto f$) and validating the power extraction pipeline across 90 automated runs.

D. Discussion

The key finding is that the 250 MHz timing failure is not a function of the three parameters explored—it reflects the fundamental critical path limit of 2.82 ns relative to the 4.0 ns constraint. The OpenROAD placer and router cannot reduce this path below approximately 2.63 ns through utilization or density adjustment alone. This informs designers to seek architectural improvements rather than continued physical tuning.

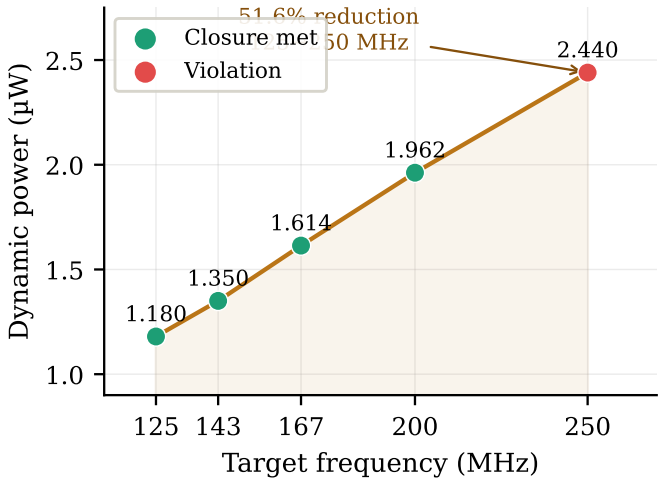

Fig. 4. Dynamic power vs. operating frequency (util = 35%, density = 0.4). The red data point at 250 MHz indicates a timing violation. Power decreases by 51.6% from 250 MHz to 125 MHz.

TABLE IV
POWER VS. FREQUENCY – SPM, UTIL = 35%, DENSITY = 0.4

Clock (ns)	Freq. (MHz)	Power (μW)	WNS (ps)
10.0	100	1.180	0.0
8.0	125	1.180	0.0
7.0	143	1.350	0.0
6.0	167	1.614	0.0
5.0	200	1.962	0.0
4.0	250	2.440	−50

At 200 MHz and below, the parameter space offers meaningful tradeoffs. The 37.2% area reduction from 35% to 55% utilization is immediately actionable. The power scaling data validates the measurement pipeline and provides a clean operating-point selection guide for power-constrained applications.

VI. CONCLUSION

This paper presented an automated grid search framework for characterizing the timing–area–power tradeoff space of the OpenROAD/OpenLane RTL-to-GDSII flow on the SkyWater 130 nm PDK. By executing 90 full RTL-to-GDSII runs across a structured parameter grid, the framework eliminates manual trial-and-error and produces reproducible, quantitative design space characterization.

Experimental results on the *spm* benchmark established that timing closure is achievable at 200 MHz under all tested configurations, while 250 MHz is unachievable through parameter tuning alone. The framework revealed a 37.2% area reduction opportunity and confirmed linear power–frequency scaling.

Future work will extend the framework to larger benchmarks including the PicoRV32 RISC-V core and a custom MAC array accelerator, incorporate additional parameters such as `SYNTH_STRATEGY` and `GRT_ADJUSTMENT`, and evaluate Bayesian optimization as a sample-efficient alternative to grid search.

REFERENCES

[1] M. Shalan and T. Edwards, "Building OpenLANE: A 130 nm OpenROAD-based tapeout-proven flow," in *Proc. IEEE/ACM ICCAD*, 2020.
[2] T. Ajayi *et al.*, "OpenROAD: Toward a self-driving, open-source digital layout implementation tool chain," in *Proc. ACM/IEEE DAC*, 2019.
[3] SkyWater Technology Foundry, "SKY130 Process Design Kit," https://github.com/google/skywater-pdk, 2020.
[4] R. T. Edwards, "Magic VLSI Layout Tool," http://opencircuitdesign.com/magic/, 2021.
[5] C. Wolf, "PicoRV32—A size-optimized RISC-V CPU," https://github.com/YosysHQ/picorv32, 2015.
[6] R. Liang *et al.*, "DRiLLS: Deep reinforcement learning for logic synthesis," in *Proc. ASP-DAC*, 2020, pp. 491–496.
[7] A. Mirhoseini *et al.*, "A graph placement methodology for fast chip design," *Nature*, vol. 594, pp. 207–212, 2021.
[8] A. B. Kahng, "New directions for learning-based IC design tools and methodologies," in *Proc. ASP-DAC*, 2018, pp. 97–104.