A2MEGA – A2FPGA Apple II FPGA Co-Processor Board

For Tang Mega 60K & 138K FPGA Modules

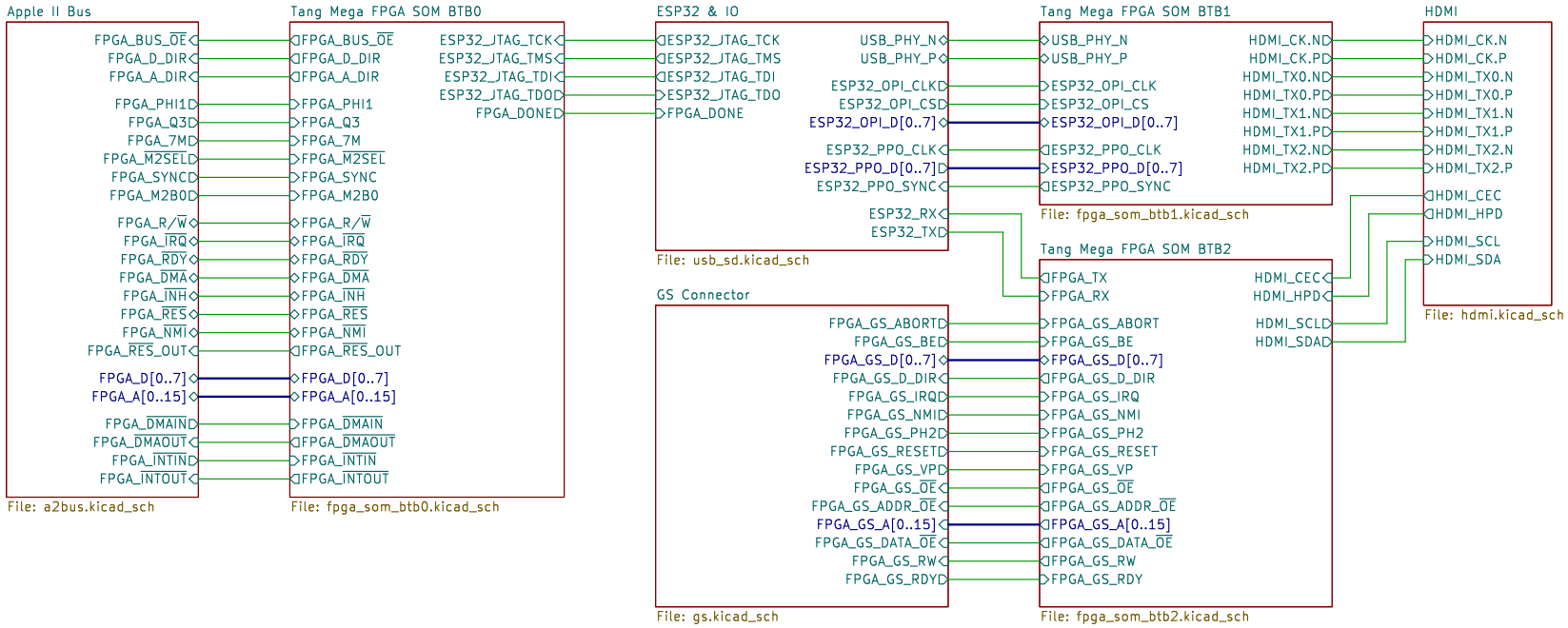

For Tang Primer 60K/138K SOM

Ed Anuff (ed@anuff.com)

Sheet: /

File: a2-mega.kicad_sch

Title: a2-mega – Apple][FPGA Board

Size: A4	Date: 2023-05-08	**Rev:**
KiCad E.D.A. 9.0.6		Id: 1/8

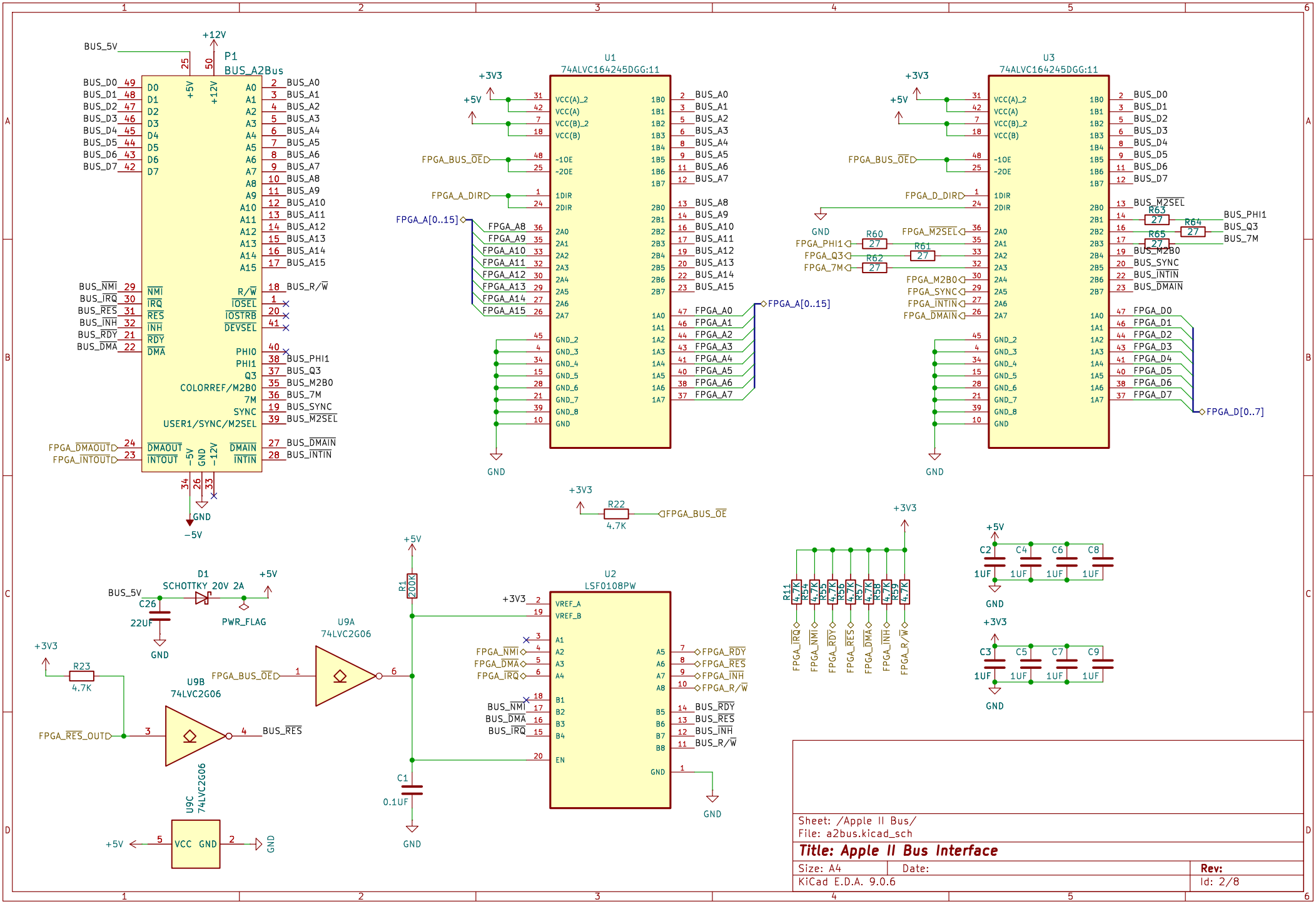
P1
BUS_A2Bus
U1
74ALVC164245DGG:11
U3
74ALVC164245DGG:11
U2
LSF0108PW
U9A
74LVC2G06
U9B
74LVC2G06
U9C
74LVC2G06
D1
SCHOTTKY 20V 2A
PWR_FLAG
FPGA_A[0..15]
FPGA_D[0..7]
FPGA_BUS_OE
FPGA_A_DIR
FPGA_D_DIR
FPGA_RES_OUT
+12V
+5V
+3V3
-5V
GND
Sheet: /Apple II Bus/
File: a2bus.kicad_sch
Title: Apple II Bus Interface
Size: A4
Date:
Rev:
KiCad E.D.A. 9.0.6
Id: 2/8

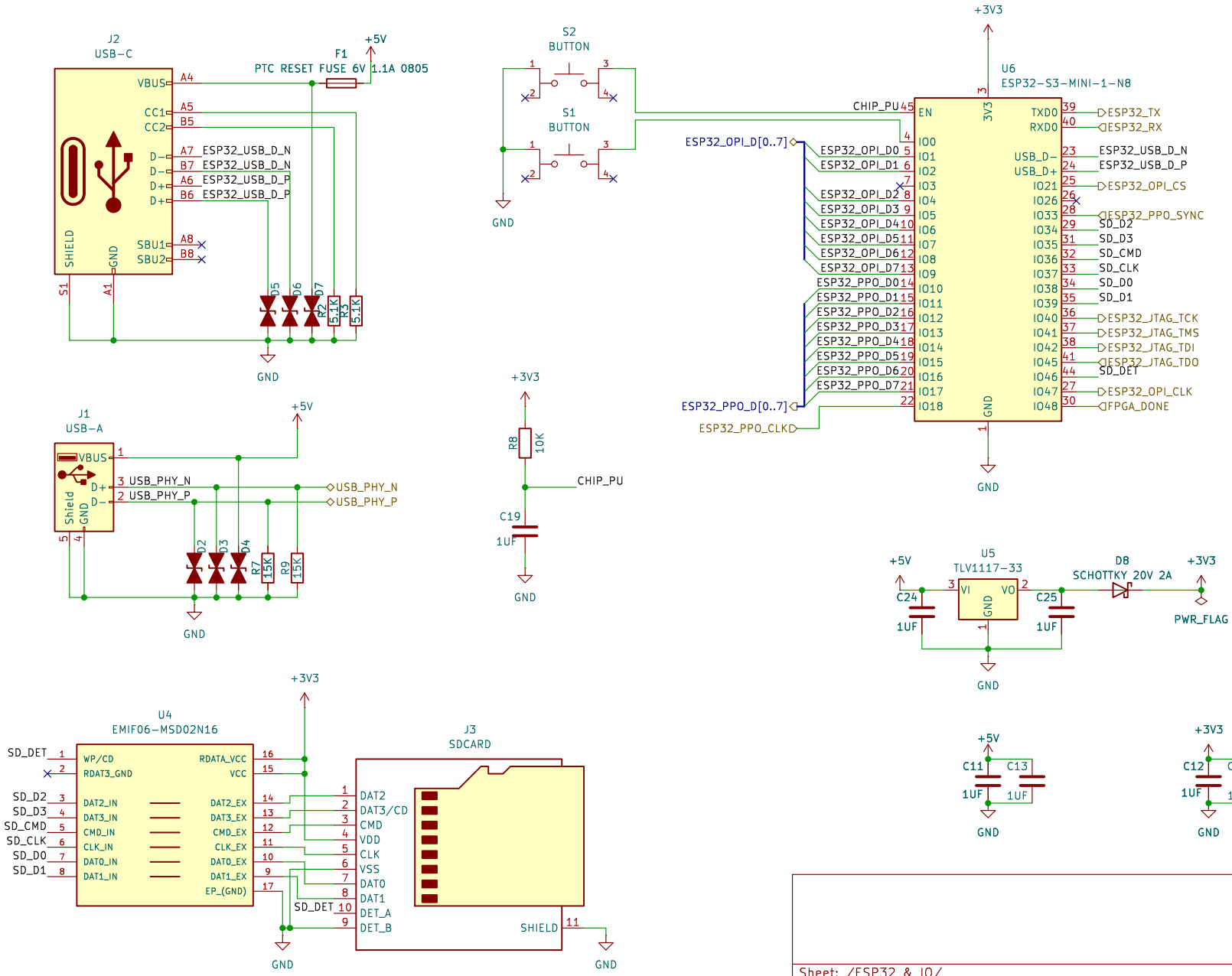

Sheet: /ESP32 & IO/
File: usb_sd.kicad_sch

Title: EPS32 & I/O – USB, WiFi, SD-CARD

Size: A4	Date:	Rev:
KiCad E.D.A. 9.0.6		Id: 3/8

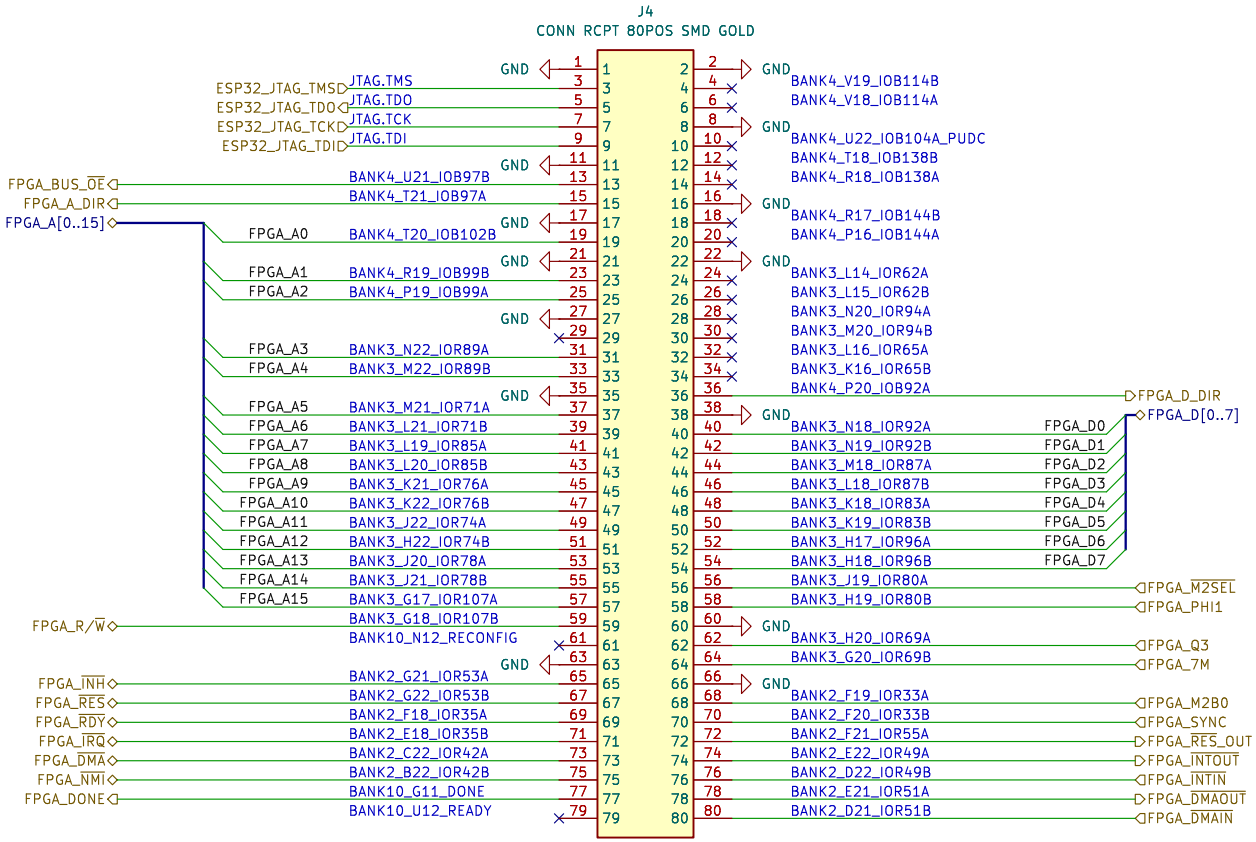

H1
M2xΦ4x3.0+1.5Hx2.2

H2
M2xΦ4x3.0+1.5Hx2.2

H3
M2xΦ4x3.0+1.5Hx2.2

H4
M2xΦ4x3.0+1.5Hx2.2

Sheet: /Tang Mega FPGA SOM BTB0/
File: fpga_som_btb0.kicad_sch

Title: TANG Mega SOM BTB0 Connector

Size: A4	Date:	Rev:
KiCad E.D.A. 9.0.6		Id: 4/8

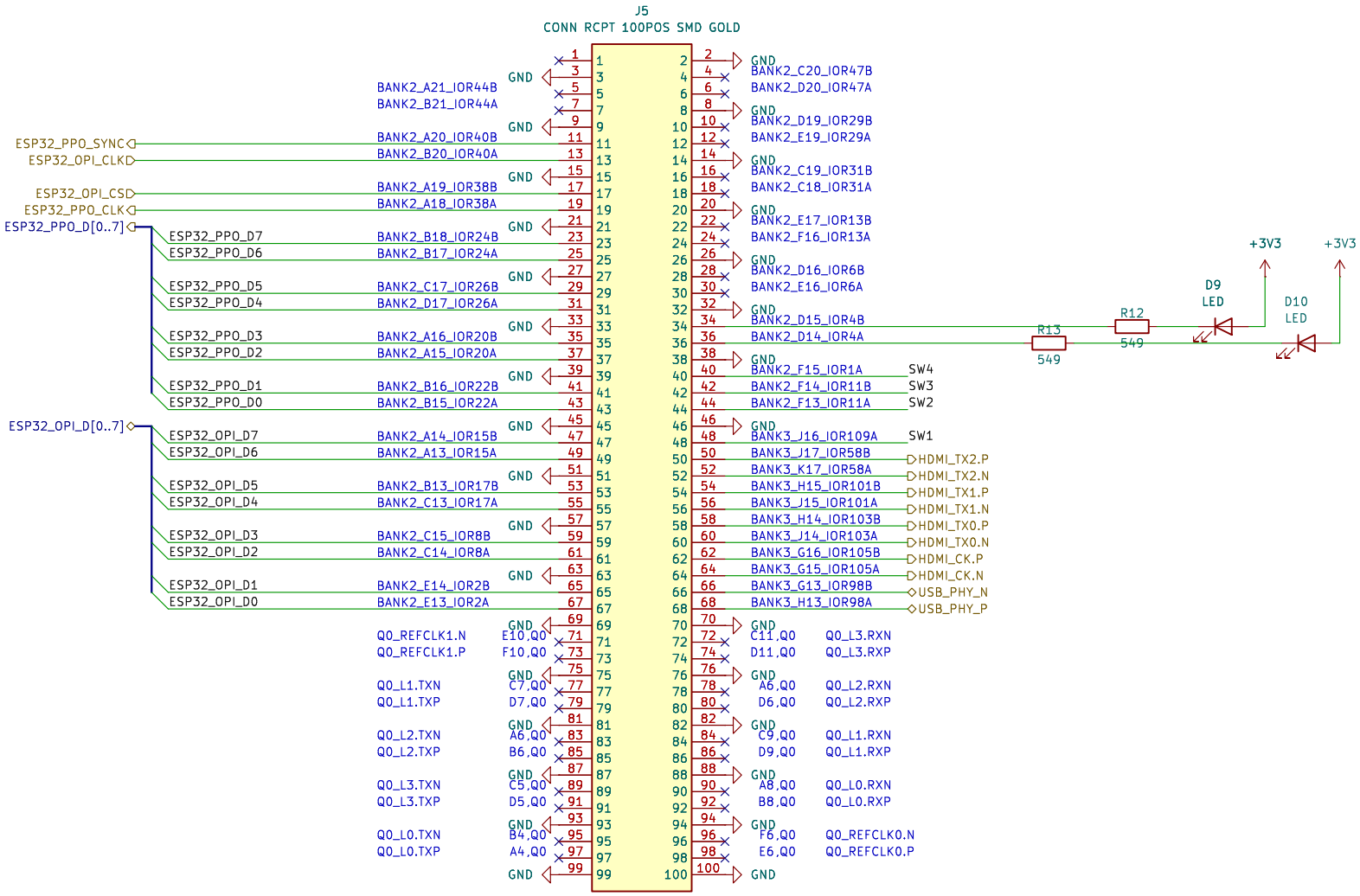

Sheet: /Tang Mega FPGA SOM BTB1/
File: fpga_som_btb1.kicad_sch

Title: TANG Mega SOM BTB1 Connector

Size: A4	Date:	Rev:
KiCad E.D.A. 9.0.6		Id: 5/8

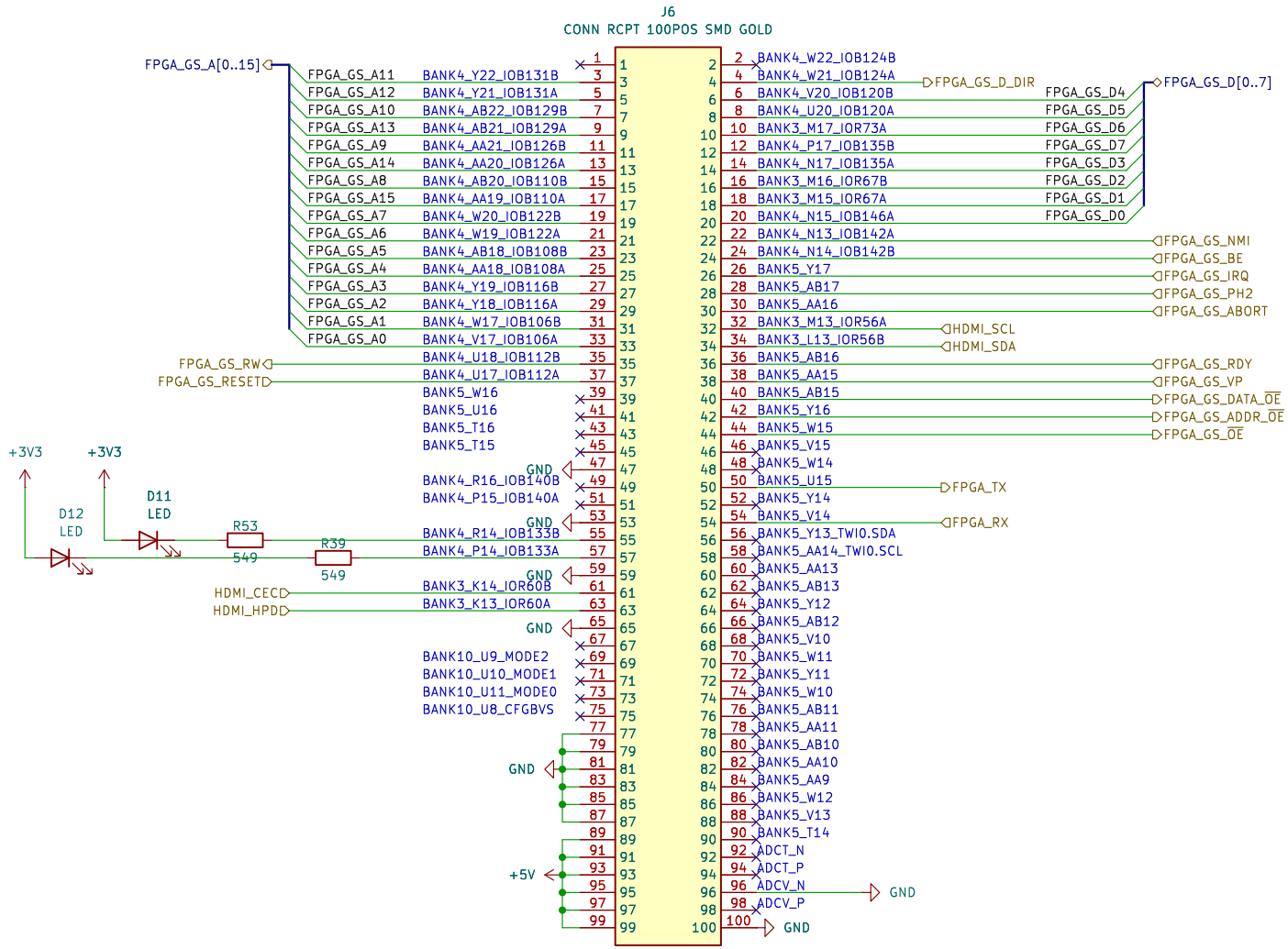

Sheet: /Tang Mega FPGA SOM BTB2/
File: fpga_som_btb2.kicad_sch

Title: TANG Mega SOM BTB2 Connector

Size: A4	Date:	Rev:
KiCad E.D.A. 9.0.6		Id: 6/8

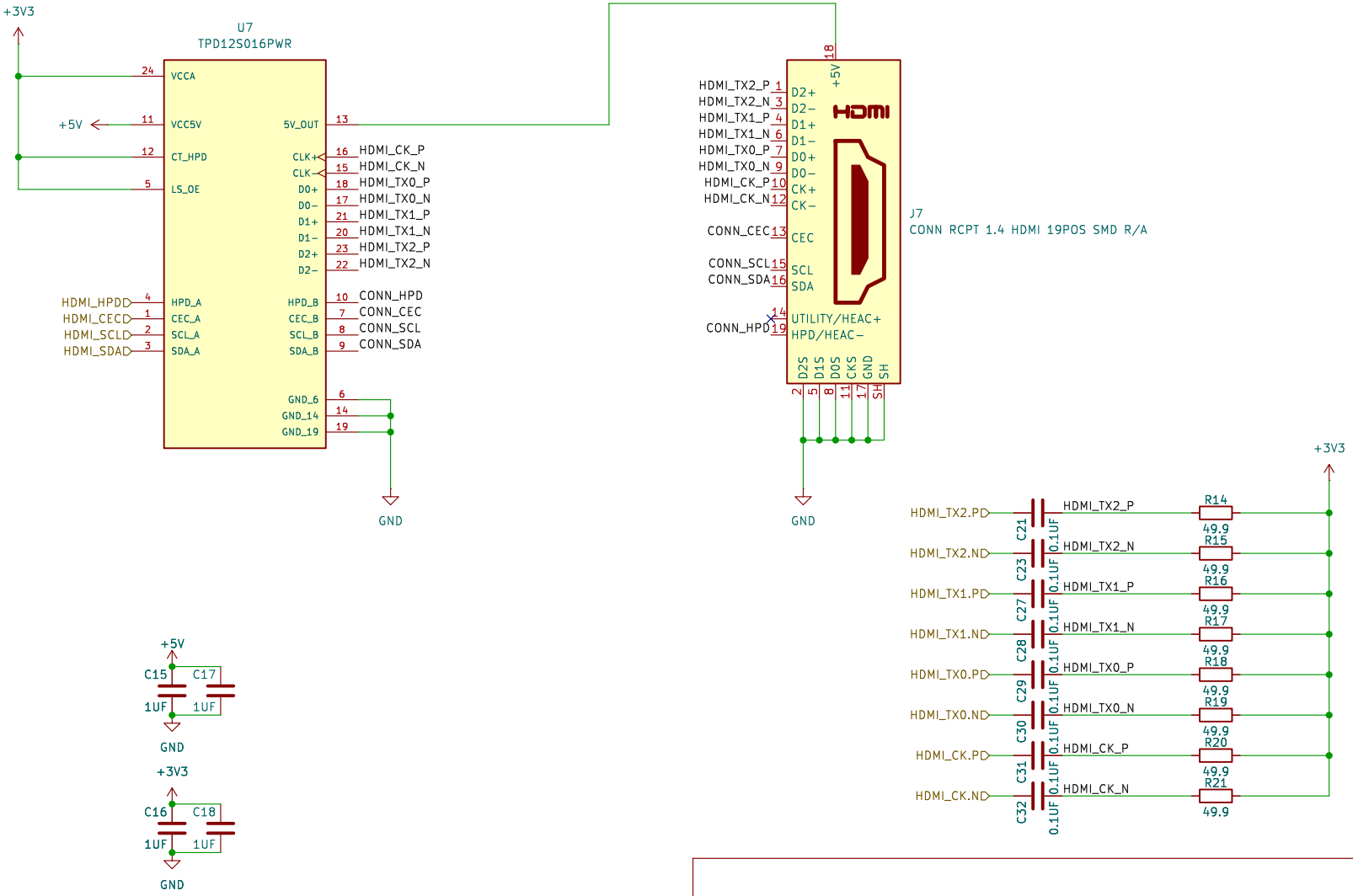

Sheet: /HDMI/
File: hdmi.kicad_sch

Title: HDMI Interface

Size: A4	Date:	Rev:
KiCad E.D.A. 9.0.6		Id: 7/8

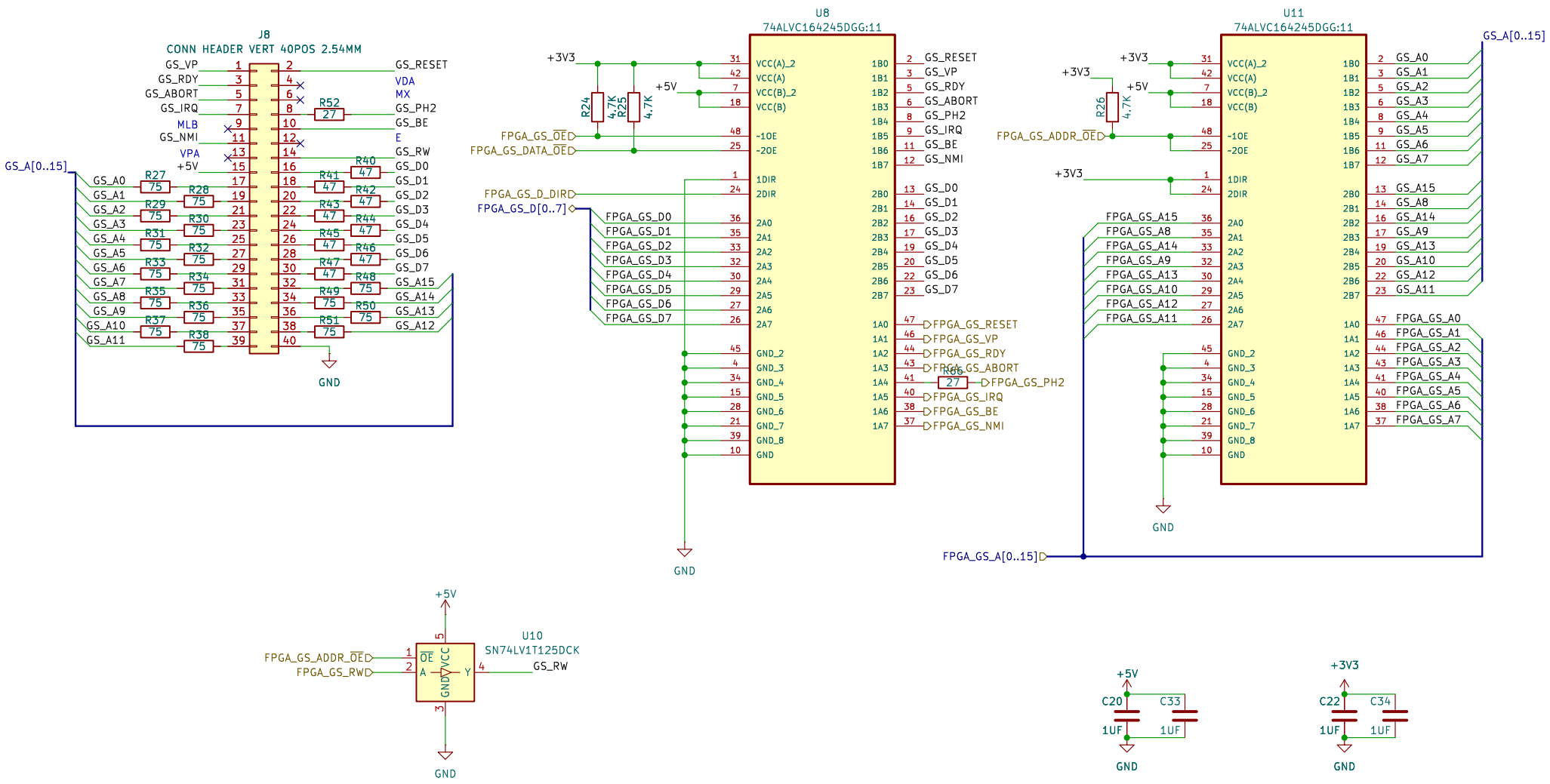

Sheet: /GS Connector/
File: gs.kicad_sch

Title: GS 65816 Connector

Size: A4	Date:	Rev:
KiCad E.D.A. 9.0.6		Id: 9/8