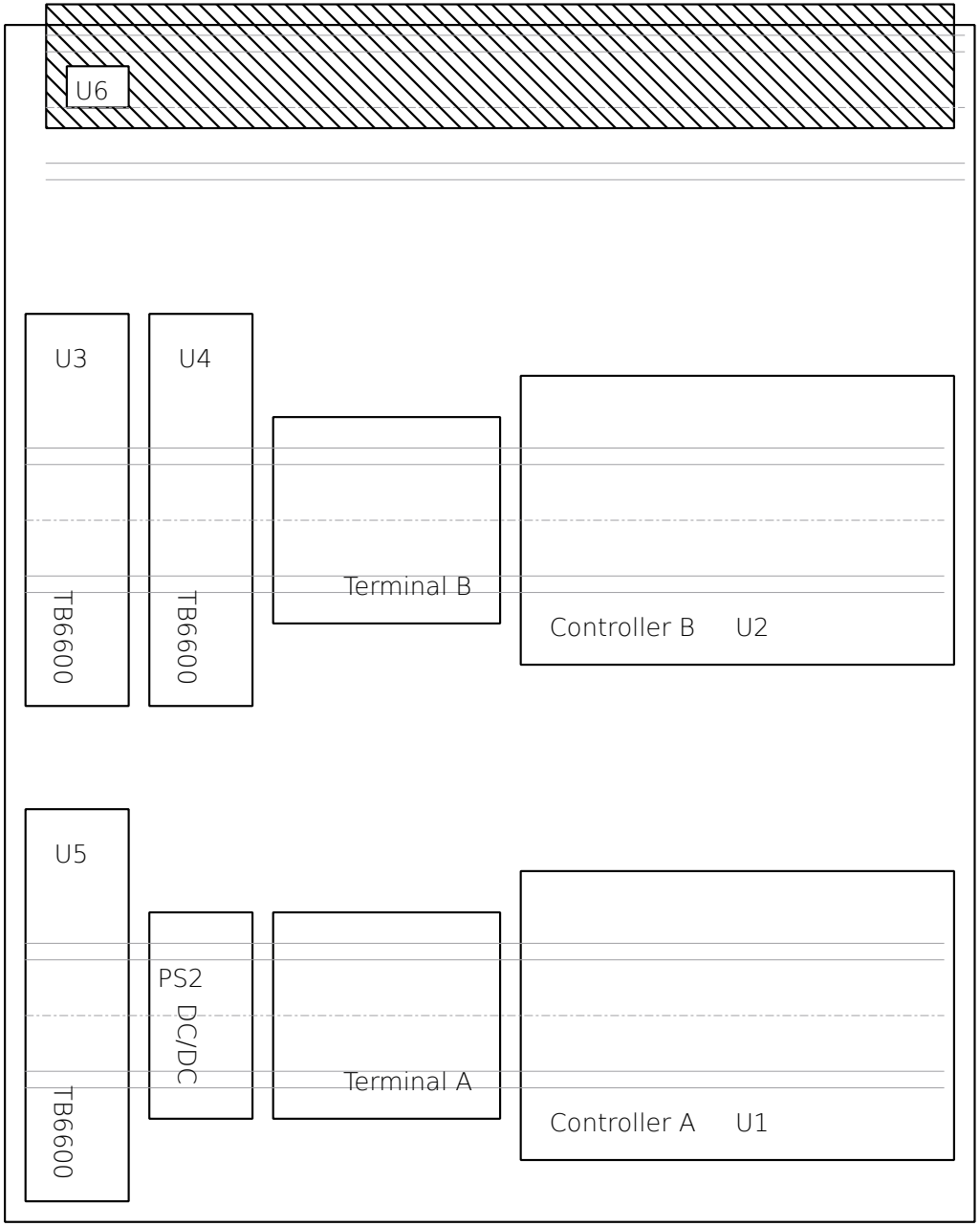

Tampak Atas

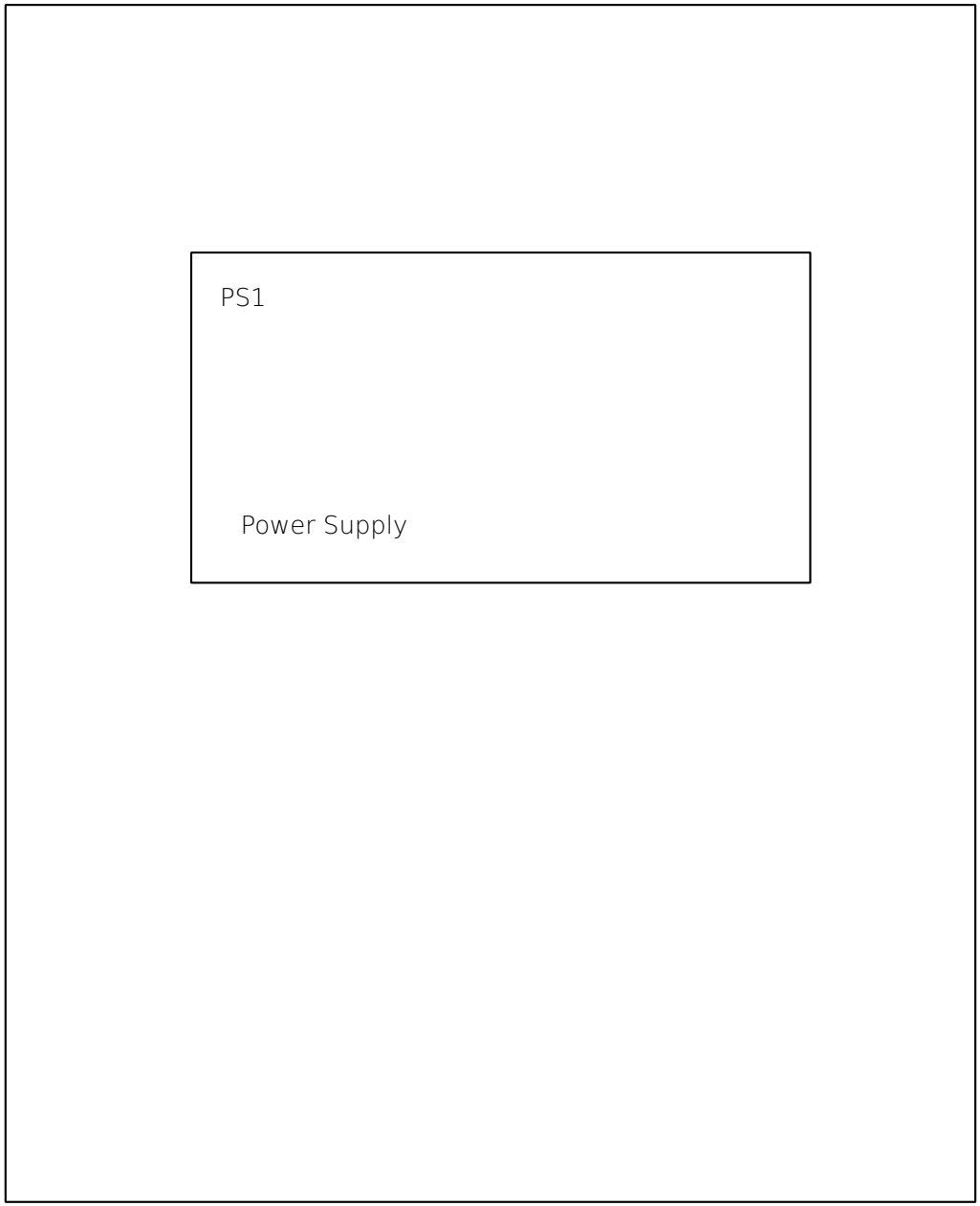

Tampak Bawah

Author:	Layout Electric	File:
Date:		Folio: 1/11

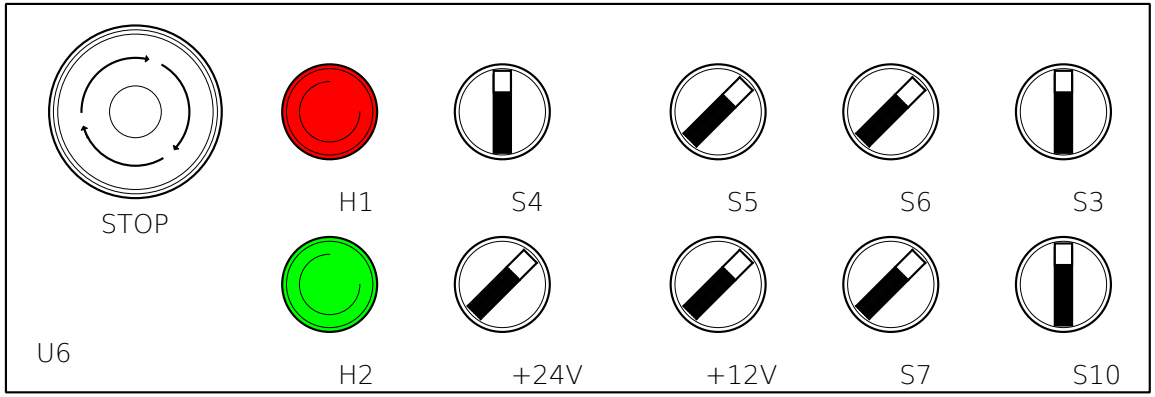

Author:	Layout Interface	File:
Date:		Folio: 2/11

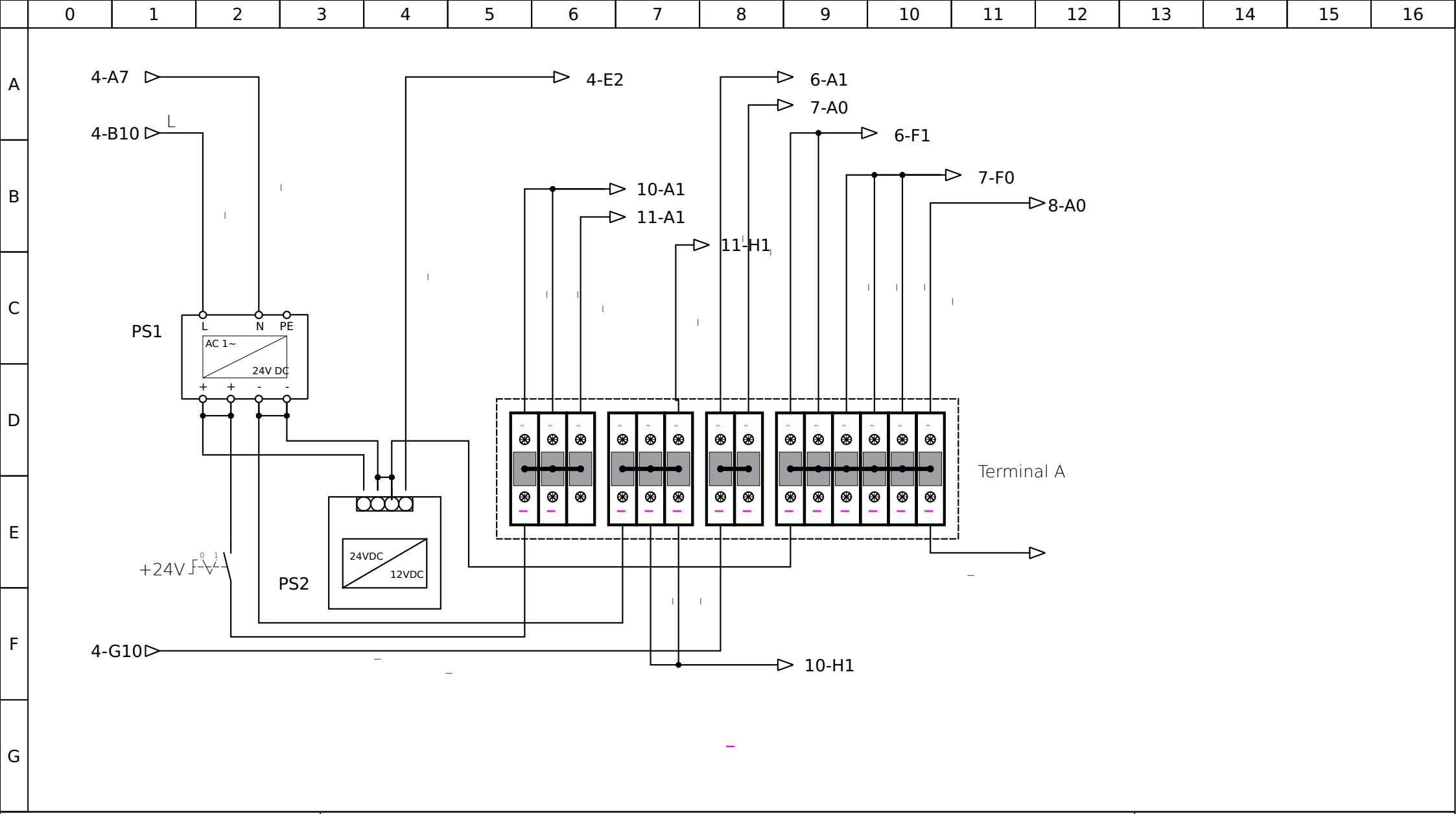

Author: Anggoro Dwi	Power Supply	File:
Date:		Folio: 3/11

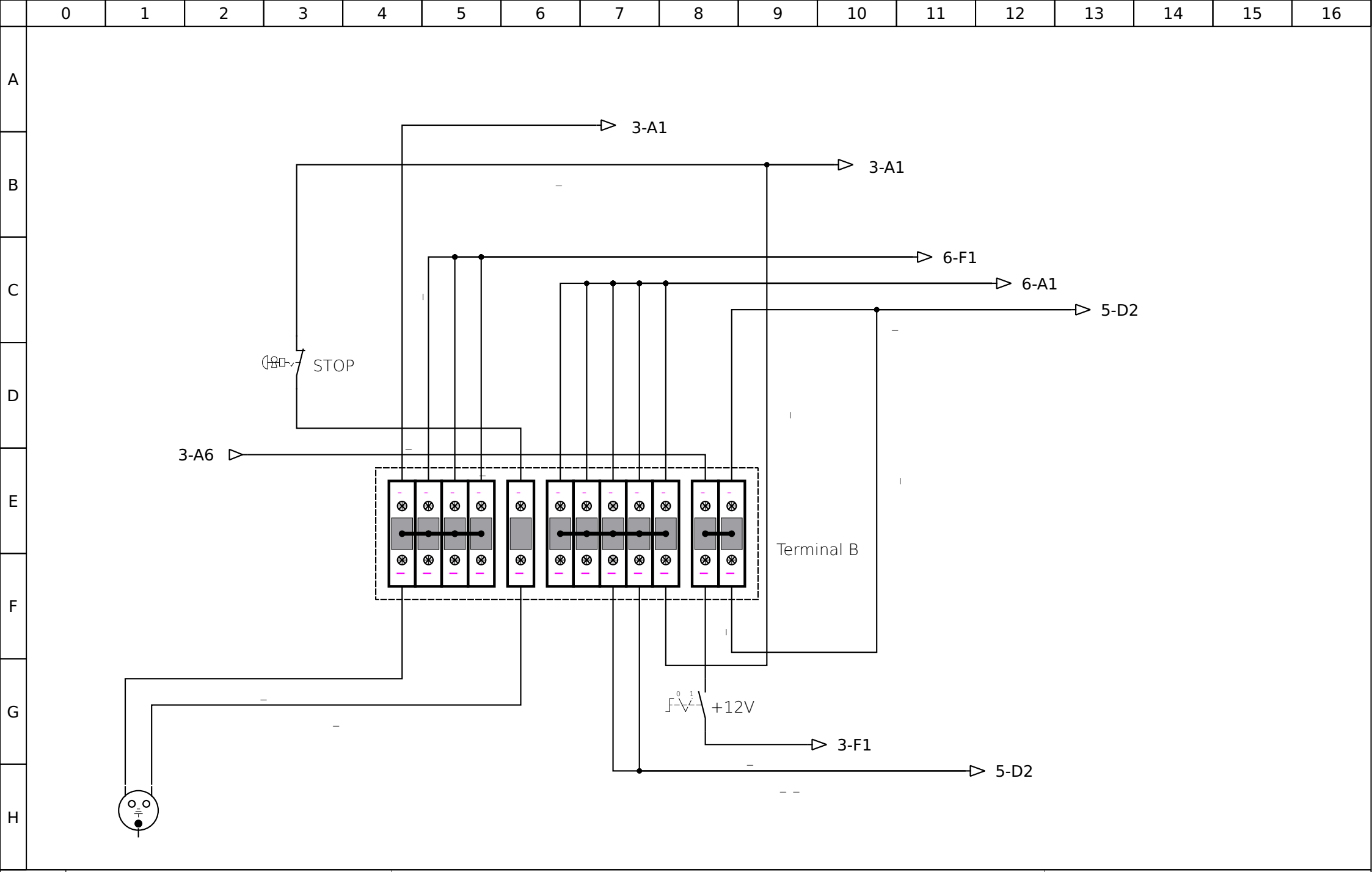

Author:	Source Supply	File:	
Date:		Folio: 4/11	

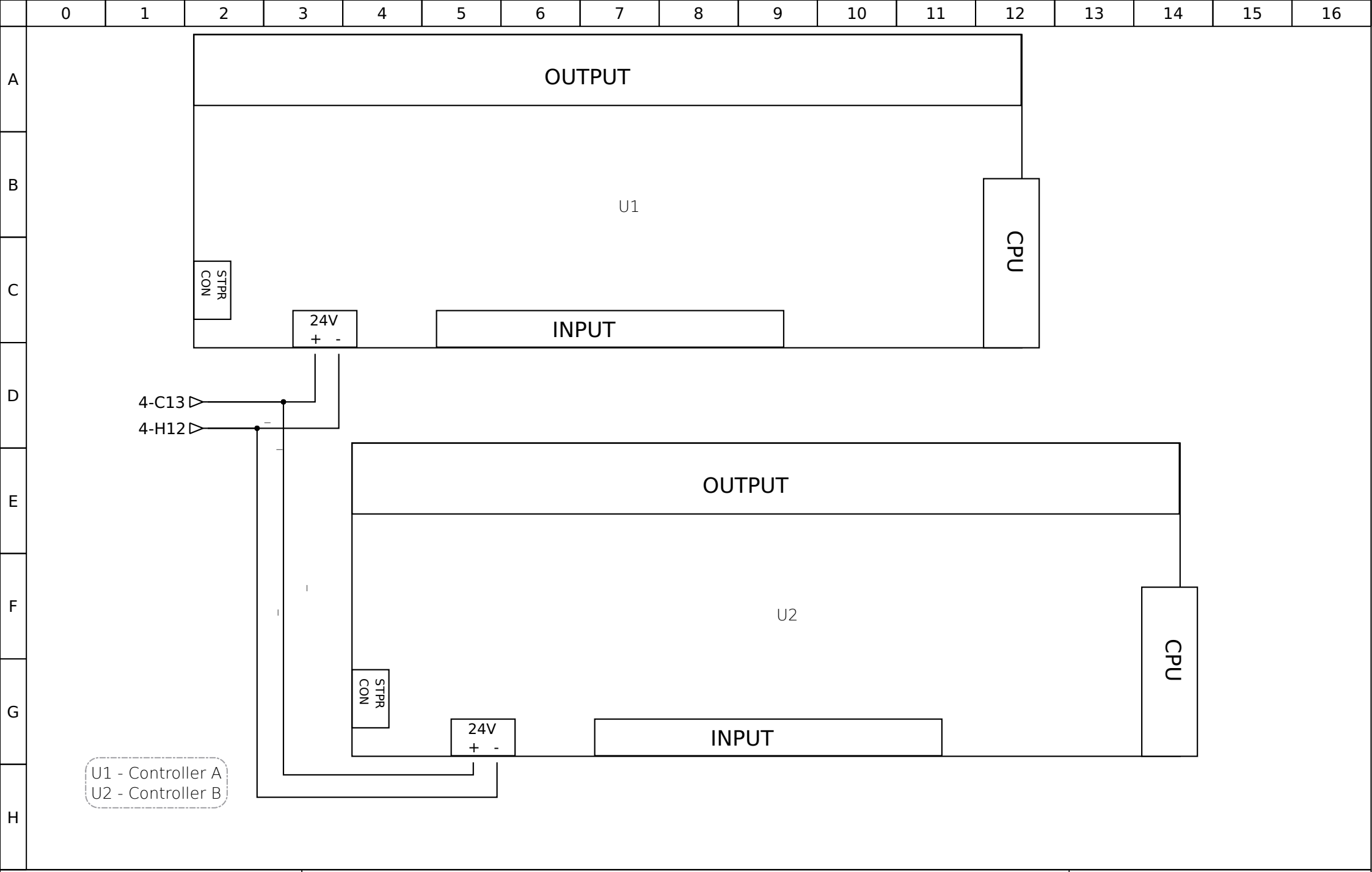

Author: Anggoro Dwi	Layout Controller	File:
Date:		Folio: 5/11

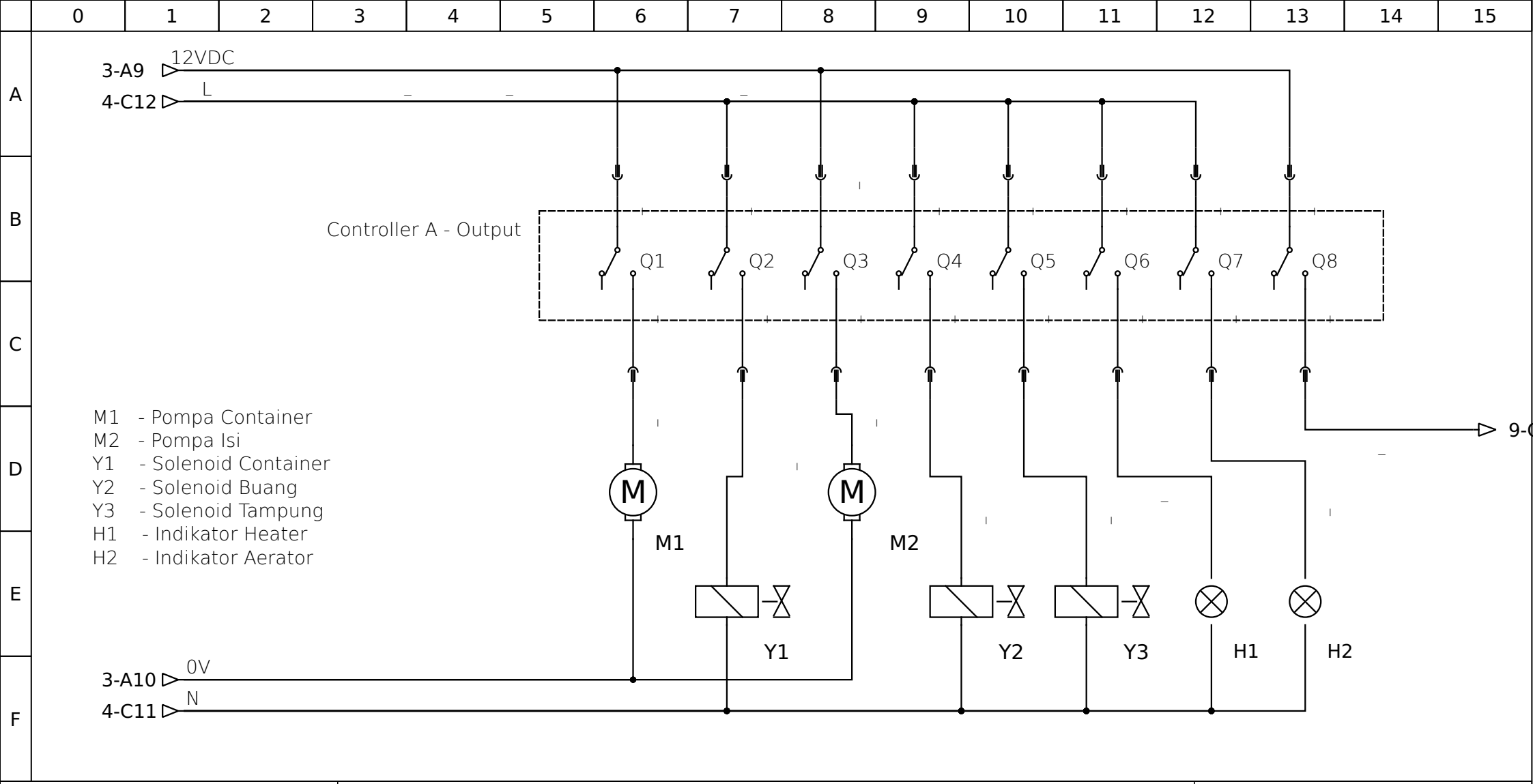

Author: Anggoro Dwi	Controller A - OUTPUT	File:
Date:		Folio: 6/11

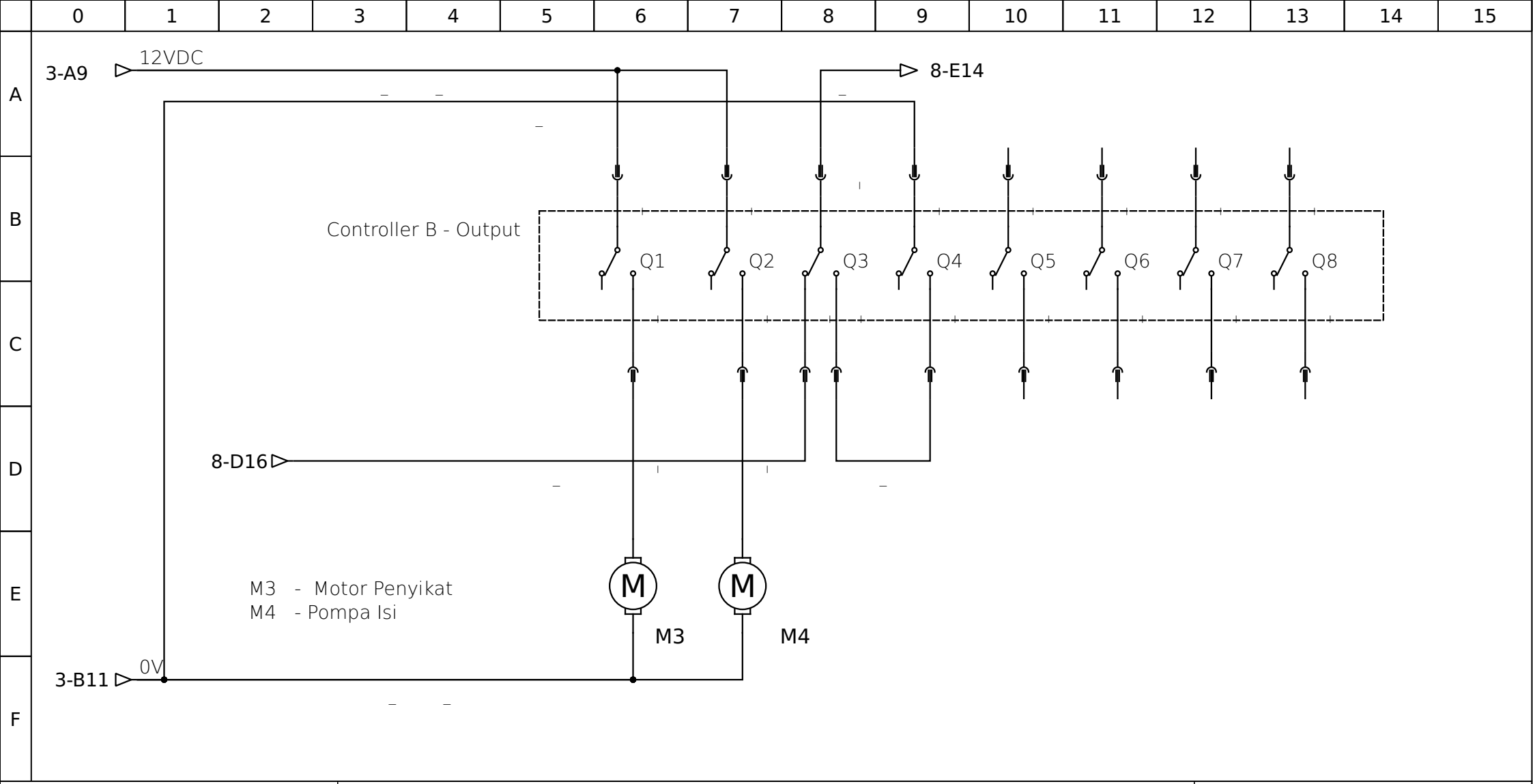

Author: Anggoro Dwi	Controller B - OUTPUT	File:
Date:		Folio: 7/11

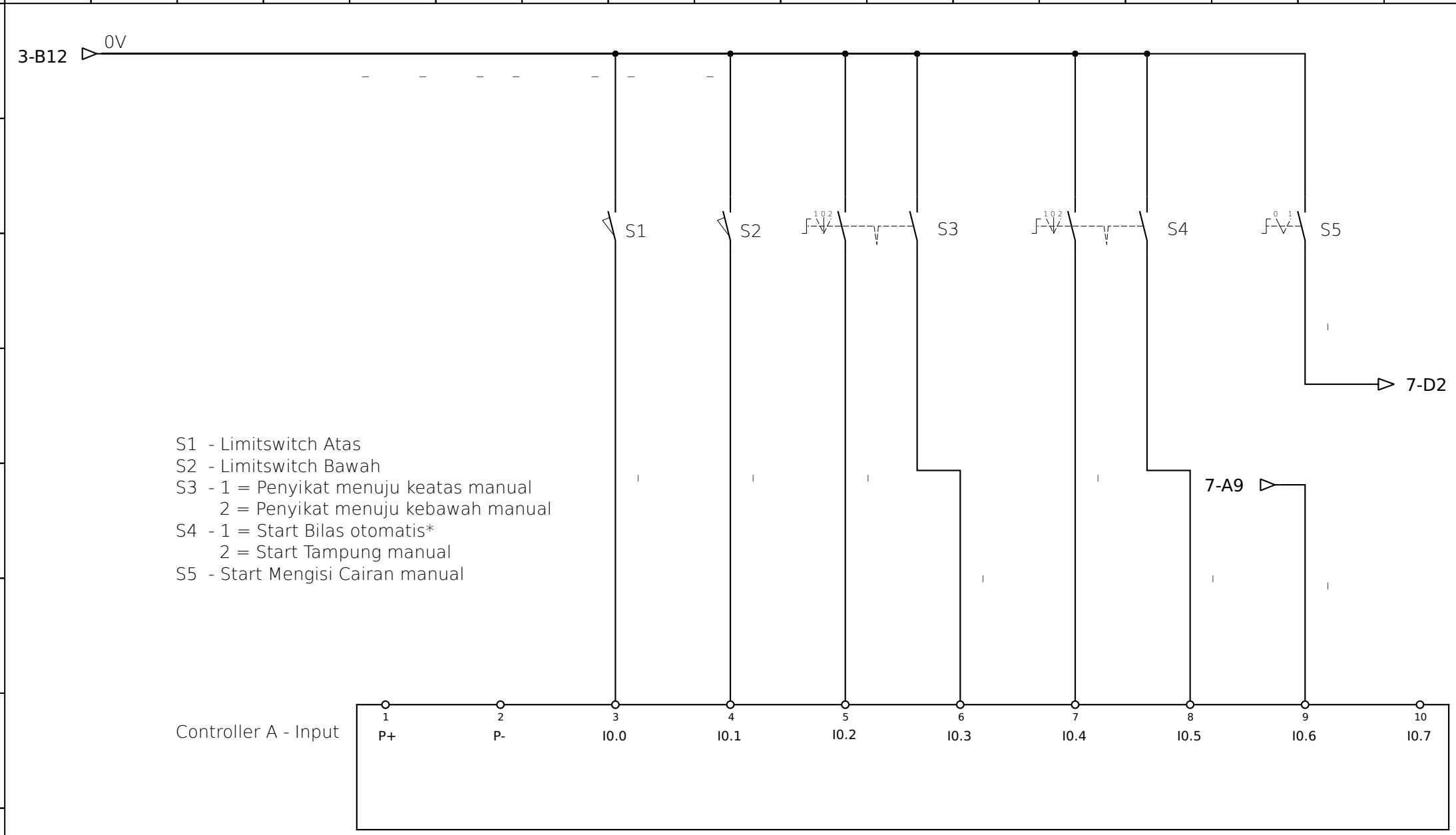

Author: Anggoro Dwi	Controller A - INPUT	File:
Date:		Folio: 8/11

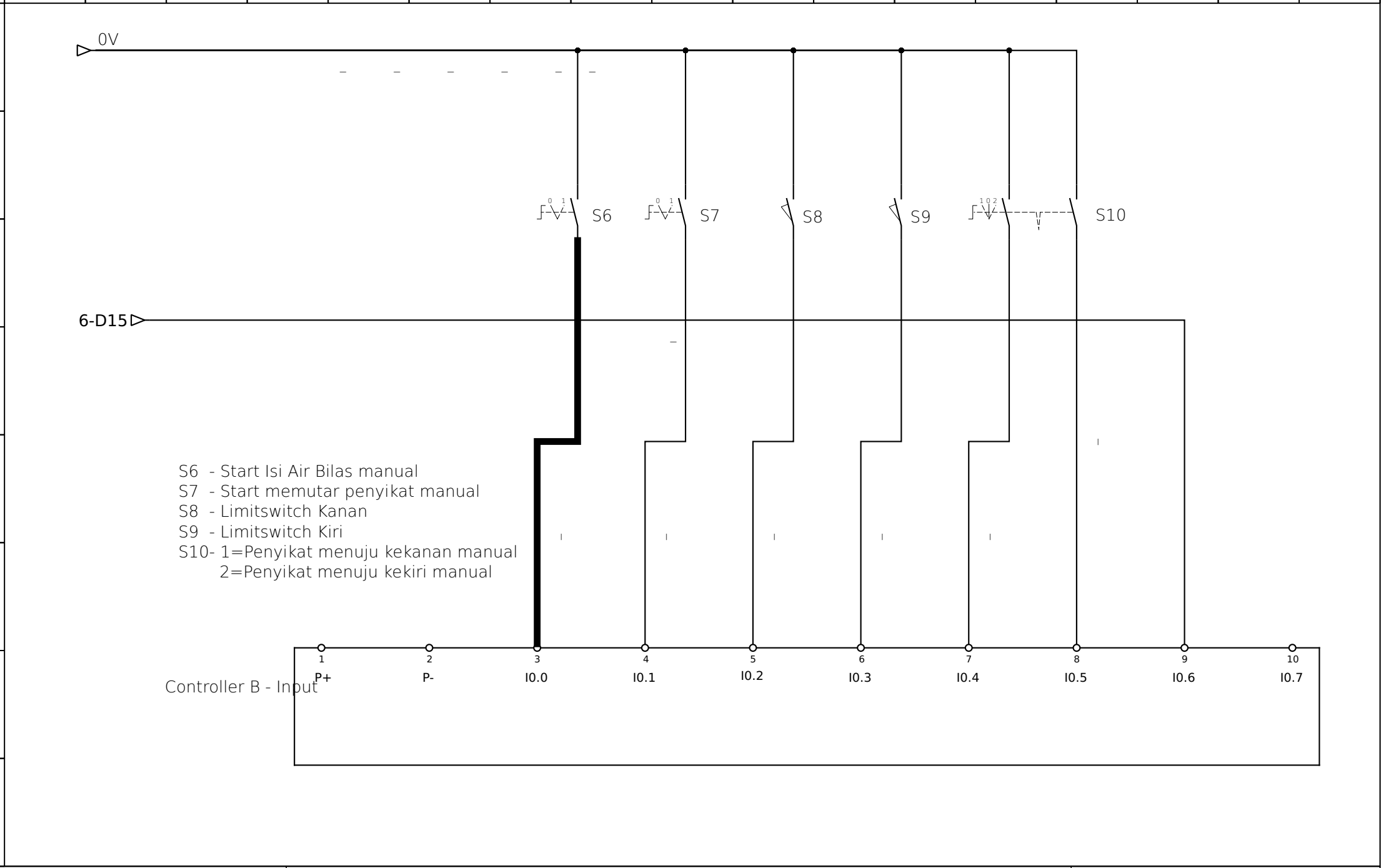

Author:	Controller B - INPUT	File:
Date:		Folio: 9/11

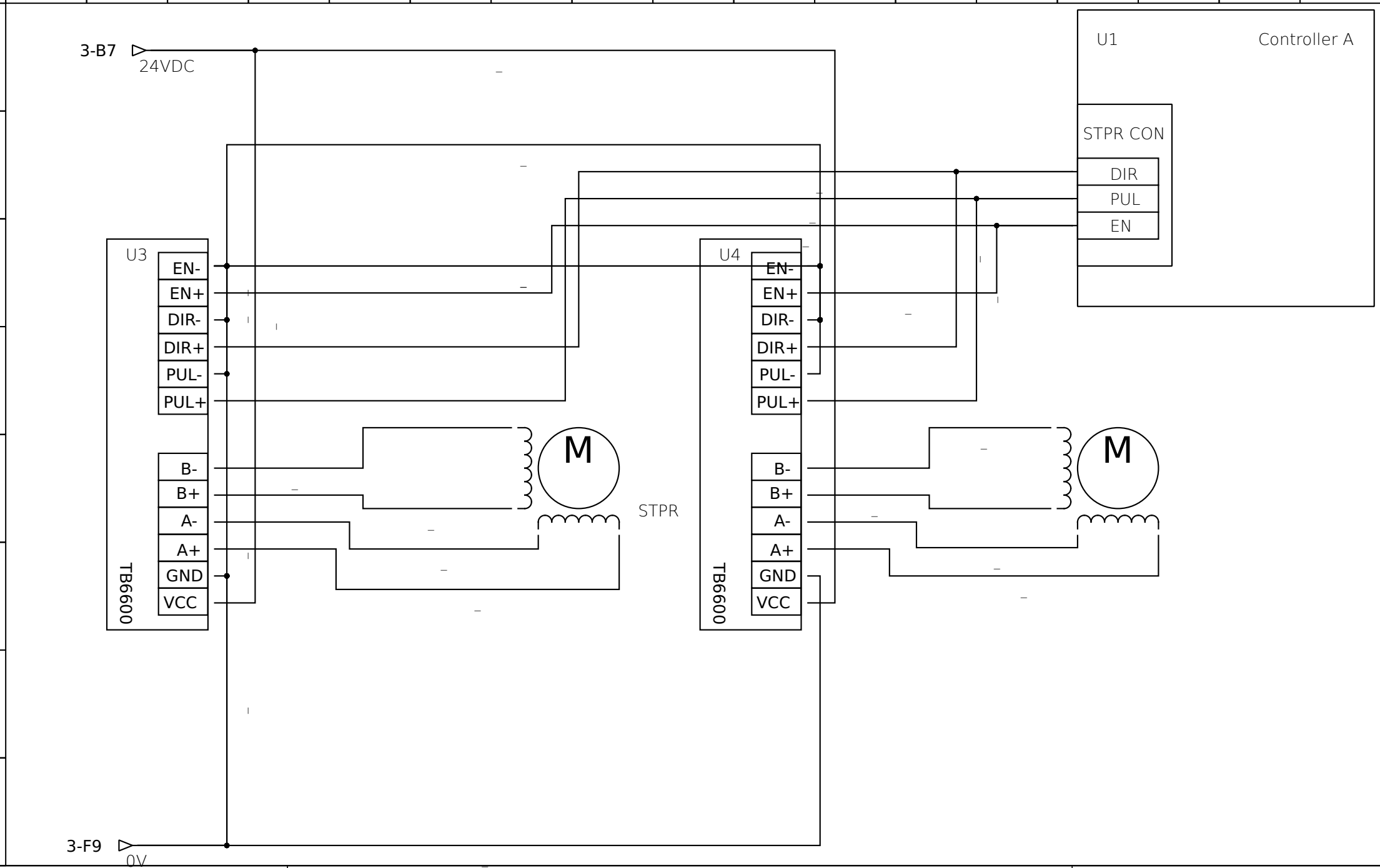

Author:	Controller A - Stepper Motor	File:
Date:		Folio: 10/11

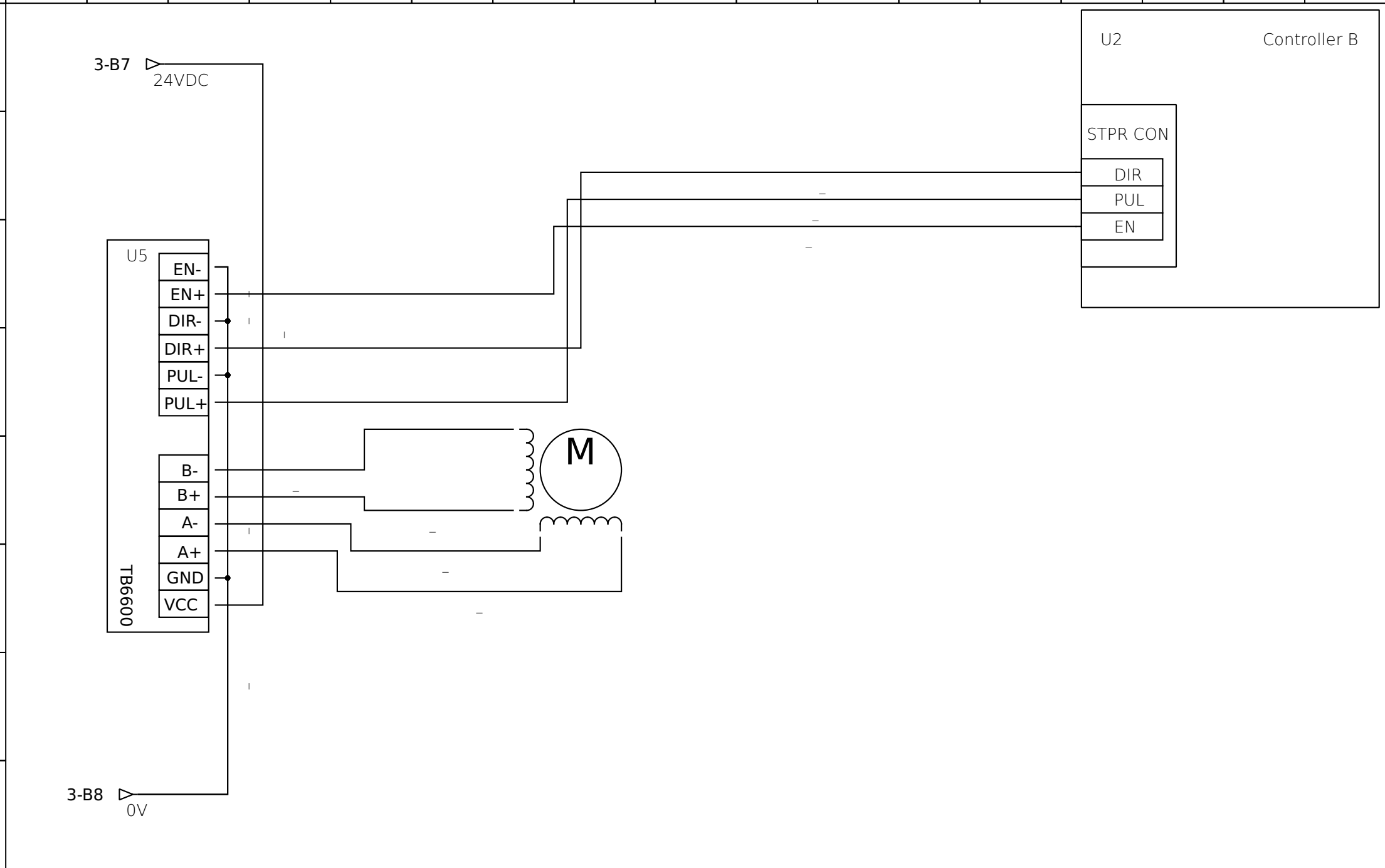

Author:	Controller B - Stepper Motor	File:
Date:		Folio: 11/11