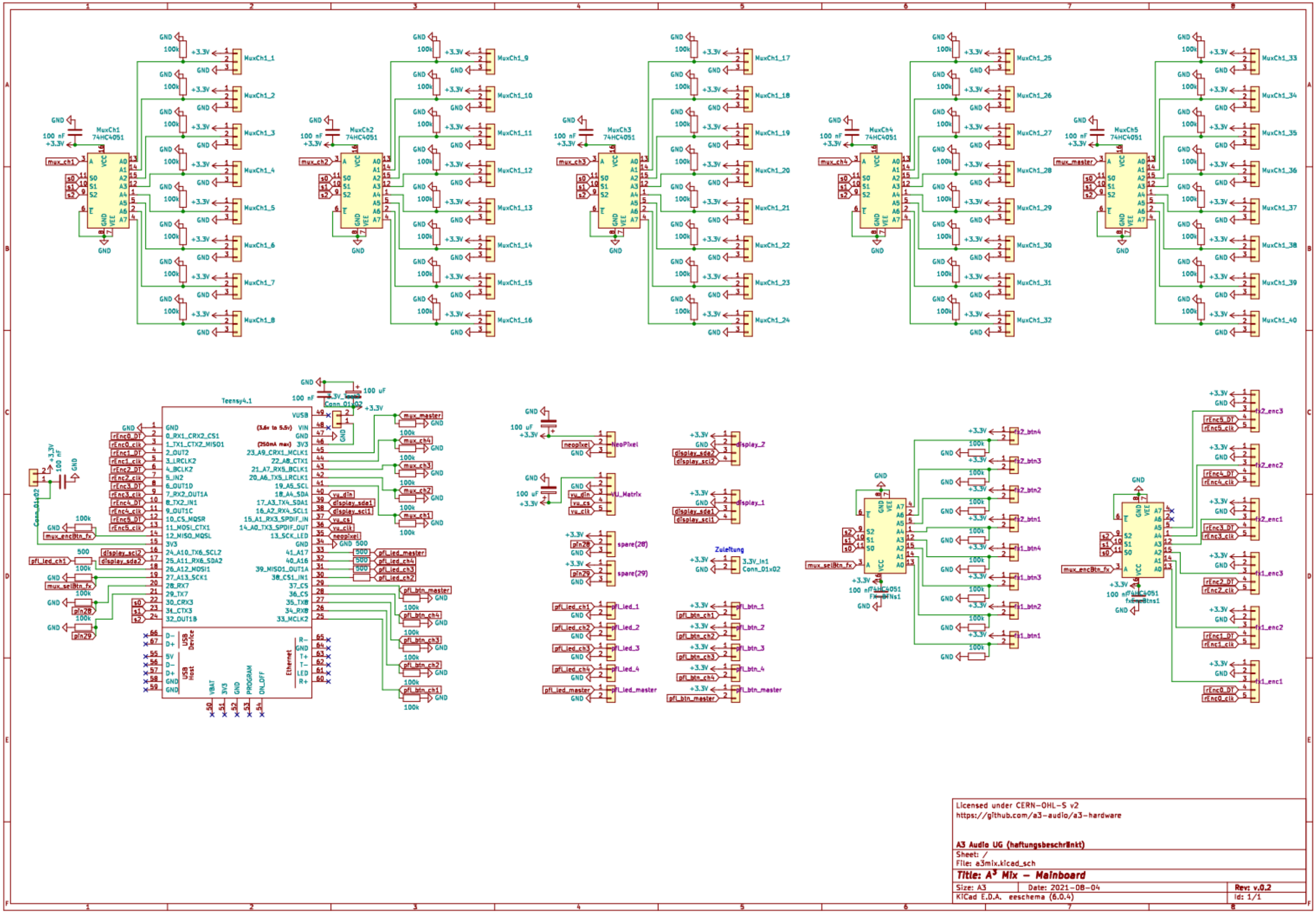
MuxCh1 74HC4051
MuxCh2 74HC4051
MuxCh3 74HC4051
MuxCh4 74HC4051
MuxCh5 74HC4051
Teensy4.1
NeoPixel
VU_Matrix
Zuleitung
3.3V_in1 Conn_01x02
Licensed under CERN-OHL-S v2
https://github.com/a3-audio/a3-hardware
A3 Audio UG (haftungsbeschränkt)
Sheet: /
File: a3mix.kicad_sch
Title: A³ Mix – Mainboard
Size: A3
Date: 2021-08-04
Rev: v.0.2
KiCad E.D.A. eeschema (6.0.4)
Id: 1/1

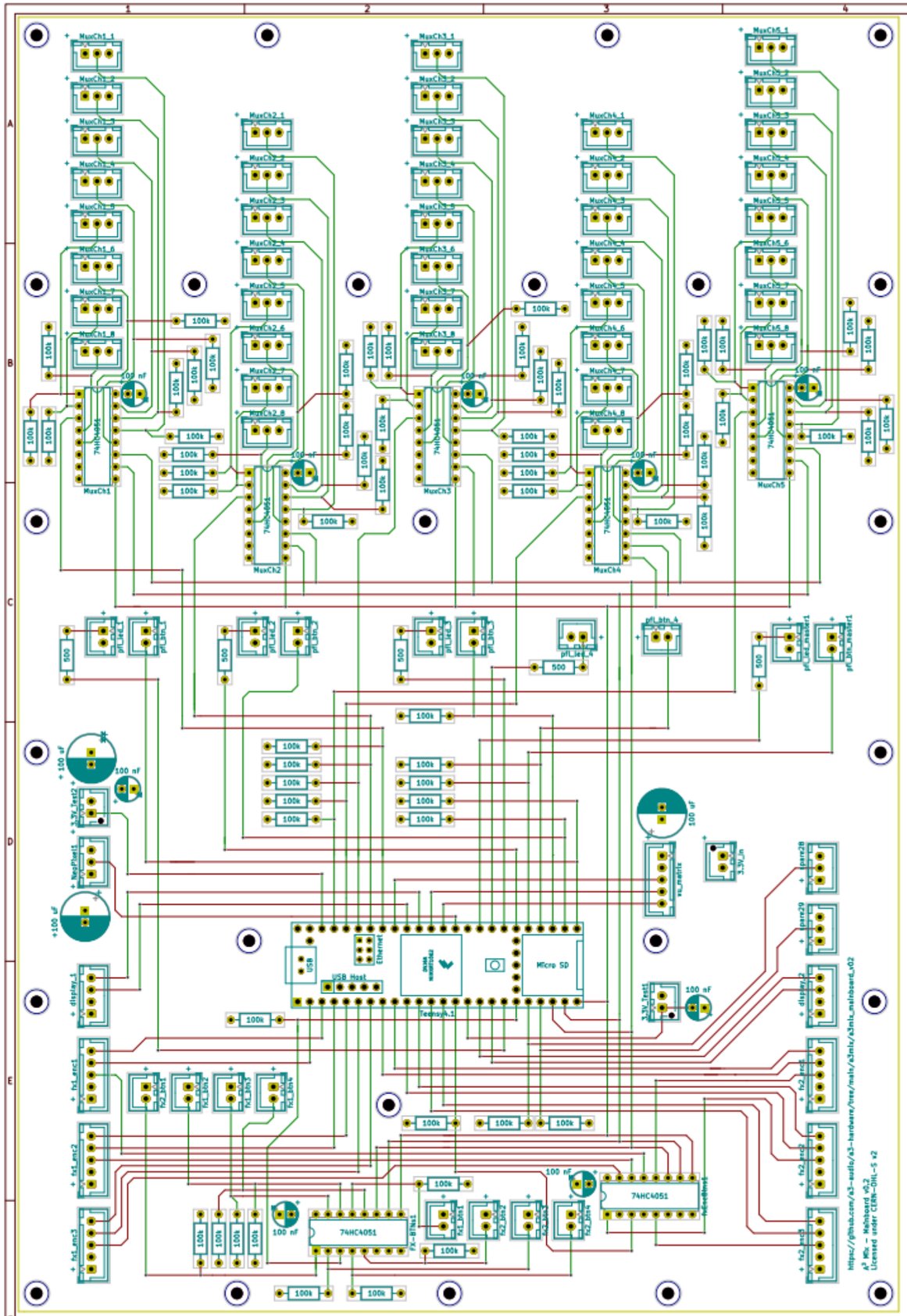

Licensed under CERN-OHL-S v2
https://github.com/a3-audio/a3-hardware

A3 Audio UG (haftungsbeschränkt)

Sheet:
File: a3mix.kicad_pcb

Title: A³ Mix – Mainboard

Size: A3	Date: 2021-08-04	Rev: v0.2
KiCad E.D.A. pcbnew (6.0.4)		Id: 1/1