भारत सरकार

Government of India

रेल मंत्रालय

MINISTRY OF RAILWAYS

सत्यमेव जयते

रेलों के फ्लैश बट वेल्डिंग हेतु नियमावली

Manual for Flash Butt Welding of Rails

संशोधित)जनवरी (2012

(Revised January 2012)

अनुसंधान, अभिकल्प एवं मानक संगठन, लखनऊ -11

Research, Design and Standards Organisation, Lucknow-11

अअमासं RDSO

रेल अग्रदूत Transforming Railways

www.rdso.gov.in

CONTENTS

PARA NO.	SUBJECT	PAGE NO.
1	Scope	2
2	Selection of Rail to be welded	2
3	Suitability of rails for welding	3
4	Preparation of rails to be welded	5
5	Procedure of welding of rails	6
6	Record of welds	13
7	Post-weld straightening	13
8	Finishing	13
9	Marking of joints	14
10	Testing of weld	15
11	Handling of high strength rails (90 UTS, HH & 110UTS)	19
12	Check list for flash butt welding plants	19
13	Welding team for mobile flash butt welding plant	20
14	Upkeep and maintenance of mobile flash butt welding plants	21

ANNEXURES

Annexure No.	Description	Page No.
I	Post weld controlled cooling treatment for 110UTS Alloy steel rails	22
II	Post weld Air quenching treatment for Flash butt welding of 60 Kg Head hardened rails	23
III	Record of welds	24
IV	Finishing tolerances for welds	25
V	Precautions to avoid defects in Flash butt welded rail joints	27
VI A	Dimensional check of welded joints (After finishing)	29
VI B	Ultrasonic testing of welded joints	30
VI C	Hardness test of welded joints	31
VI D	Transverse testing of welded joints	32
VI E	Macro examination of welded joints	33
VII	Handling instructions for 90UTS and Head Hardened rails	34
VIII	Check list for Flash butt welding plants	38
IX	List of minimum Equipments & machines required for Flash butt welding plants	41

FIGURES

Figure No.	Description	Page No.
Figure 3.2	Sorting of rails to be welded	42
Figure 3.4(a)	Tolerance on the end bends in the vertical plane	43
Figure 3.4(b)	Tolerance on the end bends in the horizontal plane	43
Figure 3.4(c)		
Figure 3.4(d)	Deviation of the rail end from the square	44
Figure 4.2(a)	Head width checking gauge for 60Kg (UIC) rails	45
Figure 4.2(b)	Head width checking gauge for 52Kg rails	46
Figure 4.2(c)	Head width checking gauge for 90R rails	47
Figure 5.4(a)	Details of A.C. pipe arrangement for controlled cooling	48
Figure 5.4(b)	Air quenching gadget for enhanced cooling of HH rail joints	49
Figure 8(a)	Tolerance for vertical misalignment of welded joint with new rails	50
Figure 8(b)	Tolerance for lateral misalignment of welded joint with new rails	50
Figure 8(c)	Tolerance for finishing on sides of head of welded joint with new rails	51
Figure 8(d)	Tolerance for finishing top table surface of welded joint with new rails	51
Figure 8(e)	Tolerance for vertical misalignment of high welded joint with old rails	52
Figure 8(f)	Tolerance for vertical misalignment of low welded joint with old rails	52
Figure 8(g)	Tolerance for lateral misalignment of welded joint with old rails	52
Figure 8(h)	Tolerance for finishing on sides of head of welded joint with old rails	53
Figure 8(i)	Tolerance for finishing top table surface of welded joint with old rails (High joint)	53
Figure 8(j)	Tolerance for finishing top table surface of welded joint with old rails (Low joint)	53
Figure 9	Location of marking of weld	54
Drg. RDSO/T-6219	Arrangement for stacking of free rails and welded panels	55

CORRECTION SLIPS

S.No.	Correction Slip No.	Date of Issue	Subject	Para No(s) affected	Remarks

MANUAL FOR FLASH BUTT WELDING OF RAILS

FOREWORD

On Indian Railways, Alumino Thermic (A.T.) Welding, Flash Butt (Electric Resistance) Welding and Gas Pressure Welding processes are presently in use for welding of rail joints.

Flash Butt Welding is being done on Zonal Railways departmentally, using Stationary Flash Butt Welding Plants of different makes. Mobile Flash Butt Welding Plants, capable of in situ Flash Butt Welding of rail joints, are also in operation on some of the Zonal Railways.

The Code of Practice for Flash Butt Welding of Rails (tentative) was issued in January,1972. Revision of this Code was made in 1996 to cover procedures for Flash Butt Welding of heavier and higher strength rails, used on Indian Railways and to incorporate the latest practices. This Code of Practice was renamed as "Manual for Flash Butt Welding of Rails". Further revision is being made to cover procedures for flash butt welding with mobile plant and latest international specifications to improve quality of flash butt welds.

The Flash Butt Welding Plants have to be maintained in good health to produce good quality welds in accordance with this manual and to have least number of thermit welds and maximum number of flash butt welds on Indian Railways.

MANUAL FOR FLASH BUTT WELDING OF RAILS

1. SCOPE

1.1 The manual gives details of the types and suitability of rails to be welded by stationary Flash Butt Welding Plant, Mobile Flash Butt Welding Plant, pre-welding inspection, preparation of rail ends before welding, the general procedure of execution of welding and finishing of welded joints. It also defines geometrical tolerances for the finished joints and acceptance tests to ensure quality control. It also defines process for procedure approval of welding plants, procedure approval for other rail sections and grades and additional transverse tests required to be performed on rectification of a welding machine malfunction, machine overhaul or work other than normal maintenance and change to another approved procedure.

1.2 Weld parameters for different rail sections/chemistry have been prescribed by manufacturers and are unique to the particular welding plants. These shall be approved by RDSO in accordance with para 5.6 of this manual. Should any change in these parameters be considered necessary, the same shall be got approved by RDSO.

1.3 All welding shall be carried out on a flash butt welding plant using automatic, programmed welding sequence.

2. SELECTION OF RAILS TO BE WELDED

2.1 **SECTION OF RAILS**: Capacity of the individual plant will determine the heaviest section and type of rail that can be welded. New as well as released but serviceable rails of same type (section and metallurgy) shall only be welded together. Welding of rails of different sections metallurgy shall not be attempted. It is preferable that rails rolled by the same manufacturers are welded together. Minimum length of old but serviceable rails for welding shall be 6 metres.

2.2 **WELDING OF OLD RAILS**: While welding old rails, it shall be ensured that only serviceable rails are welded. Old rails to be welded shall preferably be match marked before releasing from track to achieve maximum uniformity of profiles in weld zone.

2.3 **FISHBOLT HOLES**: Welded panels (10/20 rails) for laying long welded rails shall, as far as possible, be without fishbolt holes. If drilling of fishbolt hole is necessitated for the purpose

of handling during end unloading; only the second fishbolt hole (one away from the rail end) need be drilled. In case, welding of new rails with fishbolt holes cannot be avoided, it shall be ensured that the outer edge of the hole nearest to the rail end is at least 40mm away from the end to be welded to avoid the heat affected zone of the weld extending up to the edge of the hole. All fishbolt holes shall be chamfered before welding.

2.3.1 Ends of old rails with fishbolt holes/bond wire holes shall be cropped by a minimum length of 450mm before welding.

2.4 **ULTRASONIC TESTING OF RAILS TO BE WELDED**: New and old but serviceable rails shall be free from internal defects. In the case of new rails, the ultrasonic testing is required to be done at the rail manufacturer's premises. Old but serviceable rails shall invariably be tested ultrasonically before they are taken to Flash Butt Welding Plants.

3. SUITABILITY OF RAILS FOR WELDING

3.1 OLD RAILS

3.1.1 **Defective rails:** Rails having cracks or other defects such as heavy corrosion pits or which are worn by more than 2mm depth at rail seat shall not be welded.

3.1.2 **Permissible vertical wear of rails to be welded**: The vertical wear in old rails to be welded (measured as per para 302 (b) (iii) of Indian Railways Permanent Way Manual) shall be within the limits specified below:-

Rail Section	Standard height of the new rail	Minimum height of worn rail
60kg	172.00 mm	164 mm
52 kg	156.00 mm	150 mm
90 R	142.88 mm	139 mm
75 R	128.59 mm	126 mm
60 R	114.30 mm	112 mm

3.1.3 **Permissible lateral wear of rails to be welded**: Old rails to be welded shall preferably show similar pattern of side wear and the minimum width of rail head shall be as specified below:-

Rail Section	Standard width of the head of new rail	Minimum width of the head of old rail
60kg	72.00 mm	66 mm
52 kg	67.00 mm	61 mm
90 R	66.68 mm	61 mm
75 R	61.91 mm	56 mm
60 R	57.15 mm	51 mm

3.1.4 Rails with cyclic wear shall not be welded.

3.2 DIFFERENCE IN HEIGHT OF RAIL ENDS TO BE WELDED: The individual rail ends for new rails may have a maximum difference in height of 1.2mm at the welded joints. Rails manufactured by SAIL with dispensations (having letter 'D' in the rolling mark), may have a maximum difference in height of 1.5mm. This is illustrated in Fig.3.2. The difference in height shall be transposed to the foot of the rail.

3.3 DIFERENCE IN WIDTH OF RAIL HEADS TO BE WELDED

3.3.1 The difference in the width of rail heads of two rails to be welded shall not exceed 1.0mm for new and 2.0mm for old rails. New rails manufactured by SAIL with dispensations (having letter 'D' in the rolling mark) may have a maximum difference of 1.5mm in the width of rail heads. For new rails, it is preferable to restrict the difference in width of rail heads to 0.5mm by adopting procedure laid-down in para 4.2.

3.3.2 Any difference in the widths of rail heads at the welded ends, in case of both new and old rails, as a result of rolling tolerances in case of new rail and wear in case of old rails, the rail ends shall be aligned in accordance with 3.3.3 and 3.3.4 below.

3.3.3 In case of welding in depot, where it is not possible to determine the gauge face side exactly when laid in track, during setting up of rails, any difference in the width of rail heads at welded ends shall be transposed to one side of the head keeping the other side perfectly aligned. The aligned side of such welded panels shall be distinctly marked with green paint on the web at both ends of the panel. To facilitate pairing of panels, aligning on operator side as well as non-operator side may be resorted to.

Resulting step on non gauge face side after welding shall be ground out to slope not steeper than 1:500.

3.3.4 In case of in-situ welding and in case where it is possible to exactly determine gauge face when laid in track, the rail ends shall be perfectly aligned to gauge face. Any step as a result of unequal head width due to rolling tolerances shall be ground out to slope not steeper than 1:500.

3.4 RAIL END GEOMETRY: Rail ends to be welded shall meet following geometrical standards: -

(a) End-bends in the vertical plane not greater than 0.7mm on a 1.5metre straight edge [Fig. 3.4 (a)]. Sagging ends not permitted.

(b) End-bends in the horizontal plane not greater than ± 0.7mm on a 1.5 metre straight edge [Figs. 3.4 (b) and (c)].

(c) Deviation of the end from the square not greater than ±0.6mm [Fig. 3.4 (d)].

3.5 A thorough inspection shall be carried out at the plants with a view to avoid welding of rails with visible surface defects such as rolling/guide marks, wheel burns etc.

3.5.1 Rail should also be inspected to ensure that there is no chisel mark or dent of any type on bottom flange of the rail as this constitutes the tension zone.

3.6 The rails rejected due to non-compliance of the requirements of paras 3.1 to 3.5 shall not be welded. Such rails shall be marked and stacked separately for other uses.

4. PREPARATION OF RAILS TO BE WELDED

4.1 PRE-STRAIGHTENING OF RAILS: Rails not meeting the geometrical standards stipulated in clause 3.4 are to be rectified before welding using a pre-straightening machine so as to conform to the standards.

4.2 In order to minimise the difference in head width of rail ends to be welded, actual head width of rails shall be checked using template shown in Fig. 4.2 (a), (b) & (c). The deviations shall be marked on the rail head so that rails with same or minimum relative deviations are selected for welding.

4.3 END-CLEANING: Before welding, end faces of the rails to be welded and electrode contact locations shall be thoroughly cleaned of loose scales, rust, paint etc. by brushing and shot blasting/grinding to bare metal finish for good electrical contact to avoid arcing at the contact points on the rail and to eliminate the possibility of rail failure near joint due to Copper penetration and formation of brittle martensite structure. Cleaning of rail bottom shall be ensured by placing a mirror and watching the cleaned surface. The electrode contact locations should be marked with chalk on each rail end to be welded to serve as guidance for cleaning. Oil and grease, if present, shall be removed by Carbon Tetrachloride or Benzene. If any internal defect such as piping is noticed during end cleaning, the rail shall not be welded.

5. PROCEDURE OF WELDING OF RAILS

5.1 ELECTRICAL CONTACT: The electrical contacts, i.e. Copper/Melloroy electrode in the welding machine must be cleaned by compressed air pistol to ensure freedom from loose oxides and other foreign matter so that no arcing takes place at the contact points on the rail and to eliminate the possibility of rail failure near joint due to Copper penetration and formation of brittle martensite structure. The electrodes must be replaced and machined whenever surface depressions exceeding 1mm in depth are formed due to wear. For this purpose, adequate spare electrodes should be kept in the plant.

5.2 RAIL ALIGNMENT:

5.2.1The running surfaces of rails at interface shall be aligned carefully to avoid any 'step' defect generally keeping gauge face corner as reference line except as provided in 3.3.2, 3.3.3 and 3.3.4.

5.2.2For the reason of asymmetry, rails should preferably be welded with brand marks on same side.

5.3 WELDING SEQUENCE: The Stationary Flash-butt Welding Plants adopt following welding sequence :-

- Aligning (along with de-twisting, if possible).
- Initial burn off.
- Preheating.
- Flashing.
- Forging (upsetting).
- Stripping.

The mobile flash butt welders, however, give continuous flashing instead of initial burn off, preheating and flashing cycles separately.

Air pressure and voltage/current recommended by the manufacturer must be ensured throughout the welding cycle.

5.3.1 **Initial burn-off**: Relevant to the specifications of rail and welding machine, controls shall be adjusted so that at the end of this phase weld interface has good overall contact.

5.3.2 **Preheating:** The rail ends are brought into contact to allow a low voltage high amperage current flow which preheats the rail ends. Lower voltages are preferred to minimise crater damage on the rail ends. The movable rail is alternatively moved backward and forward producing a series of electrical contacts with the fixed rail end. The objective is to heat the rail faces uniformly by flashes upto the red hot stage. The rail ends are brought in and out of contact for certain duration a number of times depending on the specifications of the welding plant, the section and the metallurgy of the rail. This pre-heating cycle is executed in a fully controlled automatic mode once the parameters are selected.

5.3.3 **Flashing**: Flashing consists of moving the rail in continuous manner initially at a fixed speed but during the last few seconds, at an accelerated rate. The flashing speed is so arranged that the rail ends burn-off without short circuiting or giving rise to an open circuit condition.

5.3.4 **Forging (upsetting)** : Immediately following flashing, the pattern movement is accelerated so that the rail ends are butted together to a stage of fusion under a heavy butting force whose magnitude depends on the make of the welding plant. The welding current automatically gets cut off during the later part of the forging operation. The joint should be left undisturbed in clamped position for ten seconds after the welding cycle.

5.3.4.1 The recommended butting pressure for different types of rails is indicated below:-

- 72 UTS rails – 5kg/mm^2 on cross sectional area.
- 90 UTS rails & Head Hardened rails – 6 kg/mm^2 on cross sectional areas.
- 110 UTS rails – 7 kg/mm^2 on cross sectional area.

The heaviest rail section which can be welded on plant should be decided on this basis.

Welding of higher UTS and higher section rails on low butting load plant by increasing the number of pre-heats causes very pronounced heat affected zone (HAZ) and is detrimental to the service life of the joints.

5.3.5 **Stripping**

(i) Automatic stripper : A stripper, which may be integral with the welding plant or installed either just adjacent to welding machine or at 13/26 m distance from it, shall strip the hot upset metal all round the rail section in such a way that minimum grinding is required to achieve final finished profile at weld.

(ii) Manual removal of upset metal: Wherever automatic stripper is not installed, manual chipping using pneumatic chisel may be adopted. Recommended width of flat chisel is 50mm for removal of upset metal from junction of head & web and web & foot of the rail, half round chisel should be used. Care should be taken to ensure that chipping does not create any notches or under cutting. However, hot upset metal all round the rail shall be stripped.

(iii) Maximum thickness of trimmed upset shall be in accordance with item (v) of Annexure IV Part A for welds of new rails and item (v) of Annexure IV Part B for welds of old rails.

5.4 POST WELD HEAT TREATMENT: 72 UTS and 90 UTS rails do not require any special post weld heat treatment. However, alloy steel rails of 110 UTS and head hardened rails need post weld heat treatment to ensure variation in hardness within acceptable limits in heat affected zone. Typical post weld heat treatments for 110 UTS alloy steel rails and head hardened rail are given in Annexure I & II respectively.

5.5 WELD PARAMETERS:

Welding parameters will depend on section and metallurgy of rail to be welded. These are normally specified by the manufacturer of the welding plant. Before adoption, the welding parameters shall be got approved from RDSO by following procedure approval in accordance with para 5.6.

5.5.1 Changing weld parameters arbitrarily like changing platten travel, increasing duration and/or number of preheat cycles so as to increase interface temperature to achieve fusion with lower butting pressure (wherever butting capacity of the plant is low) or to retain heat in weld for easy upset metal removal when stripping is done away from welding machine, shall strictly be prohibited.

5.6 Procedure for Standardization of Welding Parameters

5.6.1 Procedure approval shall be carried out by RDSO for each individual machine (no type approval) by testing weld samples produced in accordance with procedure enumerated below.

5.6.2 Quality Assurance Programme (QAP) of each individual welding plant shall be submitted to RDSO through concerned Railway administration who shall scrutinize and approve by ensuring compliance of this manual.

5.6.3 Sample Preparation:

The samples shall be prepared from rail pieces having ends conforming to tolerances mentioned in 3.4 above. Before welding, end faces to be welded and electrode contact area shall be thoroughly cleaned of loose scale, rust, paint etc. by brushing and shot blasting or grinding to bright metal and brand mark removed by grinding to give consistent and good electrical contact at interface. The rails shall not be damaged by cleaning operation or through poor electrical contact. The rails shall be positioned in the welding machine such that the welding interface is central to the contact electrodes as assessed by visual or mechanical means.

Ten weld samples (two welds for each parameter) shall be prepared in presence of RDSO representative.

5.6.4 Approval Tests:

5.6.4.1 Visual Inspection:

All welds and rails shall be inspected visually for welding, trimming, clamping or profile finish imperfections, such as tears, cavities, cracks, damage and thermal damage, in particular, in the electrical contact areas.

5.6.4.2 Weld trimming and upset examination:

There shall be no sign of tearing, chisel mark or cavity in weld metal due to trimming and upset shall not be raised more than 3mm and there shall be no depression in accordance with item (v) of Annexure IV-A & B as applicable.

5.6.4.3 Step across the weld:

All the welds shall be measured in as welded condition to determine step across the weld. No step shall be permitted except as provided in 3.3.3 and 3.3.4 above.

5.6.4.4 Dimensional check:

Finished weld samples shall be checked for weld geometry and shall conform to tolerance laid down in Para 8 and Annexure-IV of this manual.

5.6.4.5 Ultrasonic test:

All weld samples shall be subjected to ultrasonic testing for detecting presence of internal defects in the weld in accordance with Para 10.1.3.

5.6.4.6 Hardness Testing:

Brinnel hardness test shall be conducted on the test weld samples before conducting transverse load test. The hardness value in HAZ shall not vary from the hardness of the parent rail by more than ± 20 HB. The location of hardness test shall be as under:

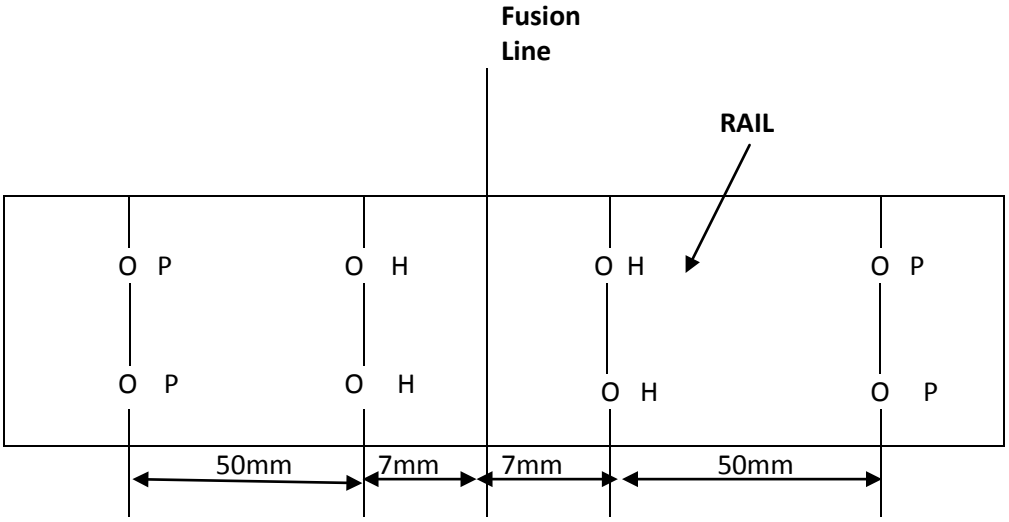

Location of Hardness test shown as small circles

5.6.4.7 Transverse Testing:

Five welds (1 weld from each parameter) in as welded condition having met the requirement of 5.6.4.1 to 5.6.4.6 shall be subjected to transverse test in accordance with procedure laid down in 10.2.2.1 with following additional provisions.

Each transverse test shall be continued until fracture occurs or be terminated when force limit of the press is reached, provided that the bend test values have reached the values given in 10.2.2.1.

For the later case, the weld shall be notched to ensure that fracture occurs in welding zone and the test weld shall be fractured. If the fracture occurs about the weld line, the fracture surfaces shall be inspected. The details of any weld imperfection shall be recorded. Lack of bond shall not be permitted. Flat spots shall not be considered to be lack of bond.

If fracture occurs remote from weld, the fracture surfaces shall be checked for the presence of die burn, which if detected shall cause the process to fail approval.

If fracture occurs within rail for reasons other than die burn then another test weld specimen shall be substituted for testing.

Five tested welds shall meet the requirement of given rail profile and grade specified in table 1.

5.6.4.8 Macro examination:

Five (1 weld from each parameter) welds in finished condition shall be sectioned for macro examination. For macro examination a longitudinal vertical section shall be taken centrally down the vertical axis of full rail and extend 50mm each side of fusion line. Similar section shall be taken from both sides of the foot, 10mm in board of the foot tip. The sections shall be polished to a suitable finish using a minimum 220 grit paper. One full depth rail sample and associated rail foot samples from each of the two welds shall be etched to show the weld boundary lines.
The etching agent shall be 5-10% Nitric Acid. Etching at room temperature shall be done for sufficient time, 20 minutes maximum, in order to show boundary lines clearly when examined. These welds shall conform to following requirements.

a) The visible heat affected zone shall be of a nominally symmetrical shape about weld line and fall within the width of 40mm maximum and 20mm minimum. The permissible deviation between the maximum and minimum dimension of visible affected zone on any weld shall not exceed

5 mm. This requirement shall apply equally to vertical axis cut through full rail depth and those taken from each rail foot.

b) There shall be no evidence of lack of bond, inclusion, cracks or shrinkage. Imperfections that cannot be positively identified by macro examination shall be inspected by micro examination.

c) In case that flat spots are found, they shall be checked by micro examination at 100 X magnification. If any cracks are found, the process is rejected.

5.6.4.9 Confirmatory Tests:

The joints showing minimum, uniform & parallel Heat Affected Zone (with 5mm difference between widest and narrowest points) along with satisfactory mechanical test results will be considered satisfactory. By using welding parameters of above satisfactory joints, again 6 joints shall be made. Out of these, 3 joints shall be subjected for Transverse Testing and remaining 3 joints for Macro Examination after having met the requirements of 5.6.4.1 to 5.6.4.6. All 6 joints shall pass the requirements.

5.6.4.10 Micro examination:

Following completion of macro examination, a micro examination shall be carried out of one of the three welds taken for macro examination having maximum HAZ during confirmatory joint making. The micro sample (15mm high) and 25mm wide (it includes 2mm on one side of fusion line and 23 mm on other side of fusion line) shall be drawn from the foot 3mm above rail foot bottom surface. The microstructure shall be free from martensite and bainite and grain size shall not be coarser than ASTM-4 at 100X magnification.

5.6.5 Approval of other rail profiles or grades.

5.6.5.1 Following the initial approval with particular rail profile and grade, other rail profiles and other rail grades as contained in IRS T-12 shall be undertaken for approval as and when required.

5.6.5.2 Approval tests:
For approval of each rail profile and grade, samples shall be tested in accordance with 5.6.4 above.

5.7 Field approval of welding procedure –

For mobile flash butt welding plant having obtained procedure approval in accordance with para 5.6 above, approval for field welding shall be granted after execution of 30 welds on track (carried out in two shifts), if they satisfy the weld acceptance criteria defined in 5.6.4.1, 5.6.4.4, 5.6.4.5, 5.6.4.7 above (visual, dimension, ultrasonic, transverse testing). This shall be carried out in presence of Engineer in-charge and the approval shall be granted by Chief Track Engineer/ Chief Engineer (construction).

6. RECORD OF WELDS: Record of all the joints shall be maintained in a register as per proforma as Annexure III. The register shall be signed daily by the welder at the end of the shift and shall be verified and countersigned by the supervisor in-charge. For those welding plants which are equipped with Automatic weld recorder, the chart of the weld recorder shall be analysed every day with respect to voltage, current, upsetting force and platten travel for each weld. Any parameter not conforming with the standard parameter should be set right. The chart shall also be preserved in addition to the register to facilitate investigations in case of defective joint and joints failing in service.

7. POST WELD STRAIGHTENING: A post straightening machine shall be installed at suitable distance from the welding machine for straightening the joint if required to achieve required geometrical tolerances in vertical/lateral alignment.

7.1 WATER COOLING: It is desirable to do post weld straightening after the weld has cooled down to ambient temperature. Water spray cooling shall be done at such suitable distance from the welding plant where the temperature of the weld is not more than 350 degree Celsius which normally is achieved in 7-8 rail length.

8. FINISHING :

8.1 The top, side and bottom surfaces of the rail head shall be ground smooth so that the weld surface is absolutely flush with the parent rail surfaces. Particular care is necessary to ensure that finish grinding does not burn or notch the rail surfaces. After grinding, the top table and the sides of the rail head shall comply with the geometrical standards given in Annexure IV. Grinding shall be done preferably using a profile grinding trolley, in the absence of which manual grinding can be done using a cup

grinder. Depending upon whether it is done mechanically or manually, grinding may be done in stages.

8.2 Areas to be ground smooth:

Upper sides, under surfaces and edges of rail foot shall be ground smooth. The edges of foot should be rounded and bottom of rail foot ground smooth without any minus tolerances to avoid damage to elastic rail pads and eliminate stress riser.

8.3 In case of in-situ welding with mobile flash butt welding plant, profile grinding can be done in stages i.e. initial grinding and final grinding. Final grinding can be performed in track with rails fastened in position over a minimum length of three sleepers on either side of weld. Profile finishing of rail head shall be carried out and contained in shortest possible length but not greater than 400 mm on either side of weld. Profile finishing should not cause any thermal or mechanical damage to rail.

9. MARKING OF JOINTS: Every joint shall have distinctive mark indicating the weld number, month and year of welding and the code of the plant as shown below. The marking should be embossed on the gauge and non gauge face sides of the head of the rail and diagonally opposite to each other across the joint at 300 mm away from the centre line of weld by punching after finishing of the weld without causing any damage to rail, in letters/digits of 6mm height, located as indicated in figure 9.0.

(A) For Stationary Plant:-

XXXX MM YY AAA

The first four digits indicate the weld number starting from 0001 for first weld of every month, the next two digits month of welding followed by last two digits of the year of welding. The end letters shall be code of the Welding Plant. For example, 32810891 MGS indicates that the particular weld is 3281st weld of August1991 of Mughalsarai Flash Butt Welding Plant.

(B) For Mobile Plant:-

XXXX MM YY OO PP EE

The first four digits indicate the weld number starting from 0001 for first weld of every month, the next two digits month of welding followed by next two digits of the year of welding. The letters OO denotes the code for owner of the plant, PP denotes the code for

the plant of that particular owner and EE stands for the code of agency executed the welding work.

10. TESTING OF WELD: It shall be the responsibility of the Plant in-charge and the quality control supervisors to device adequate stage inspections before final acceptance tests are conducted. Causes for failure either of weld or in heat affected zone at any stage in production shall be investigated and corrective action taken before regular welding is continued. Some common causes for failure and the precautions to be taken are listed in Annexure-V for guidance. Acceptance test comprises of all the weld being checked by visual inspection, dimensional tolerances and ultrasonic test. Sample welds should be subjected to transverse bending test and detailed metallurgical tests in a laboratory as a quality assurance measure. Results of all the tests shall be maintained in register by the plant in-charge assisted by quality control supervisor. Details and method of conducting the tests are as follows:-

10.1 TESTS FOR EVERY JOINT

10.1.1 Visual inspection: After finish grinding, all welds shall be visually inspected for possible cracks, lack of fusion and other surface defects like notching, damage in heat affected zone etc. Welds with visible defects shall be rejected.

10.1.2 Dimensional check: All welds shall be inspected using standard 1m and 10cm straight edges and feeler gauges, as shown in figure 8 (a) to 8 (j) for compliance of geometrical standards as given in Annexure-IV. Welds not meeting these standards, if rectifiable by grinding, can be re-ground, failing which they shall be rejected. Results shall be maintained as per proforma given in Annexure-VI 'A'.

10.1.3 Ultrasonic Test (USFD): All welds shall be subjected to ultrasonic testing for detecting presence of internal defects in the weld. This test can be done by installing an on-line USFD equipment or as an interim measure manually with portable USFD machine. Entire cross section of the rail i.e. head, web and foot shall be tested by trained personnel as per the procedure laid down for Ultrasonic testing of Flash butt welds in 'Manual for Ultrasonic testing of rails & welds' and its correction slips, issued by RDSO, Lucknow to detect internal flaws. Welds having defects shall be rejected. Results shall be maintained as per proforma given in Annexure-VI 'B' . Defective joint shall be distinctly marked and panels with defective joints shall be separately

stacked. The defective joint shall be cut and removed before the panel is dispatched from the Flash Butt Welding Plant. Another panel of matching length should be welded and the short panels (minimum 3 rail lengths) dispatched in pairs.

10.2 TEST ON SAMPLE JOINT: Sample test joints shall be made on pieces of rails of similar section and conforming to the same specifications as the rails being welded. The length of each piece shall not be less than 750mm. Following tests shall be carried out on sample test joint. Frequency of test is indicated in table 1. These test shall also be carried out whenever there is a change in type of rail being welded. In case a sample joint does not comply with the requirements of the test, two more sample joints will be made and tested. If both the sample joints meet the requirements of the tests, welding may continue. In case of failure of any of the retest joints, RDSO should be consulted for investigation and fixing revised welding parameters.

10.2.1 Hardness Test: Brinnel hardness test shall be conducted on the test weld sample before conducting transverse load test. The hardness value in HAZ shall not vary from the hardness of the parent rail by more than ±20 HB. Results shall be maintained as per proforma given in Annexure – VI 'C'. Location of hardness test shall be as under:

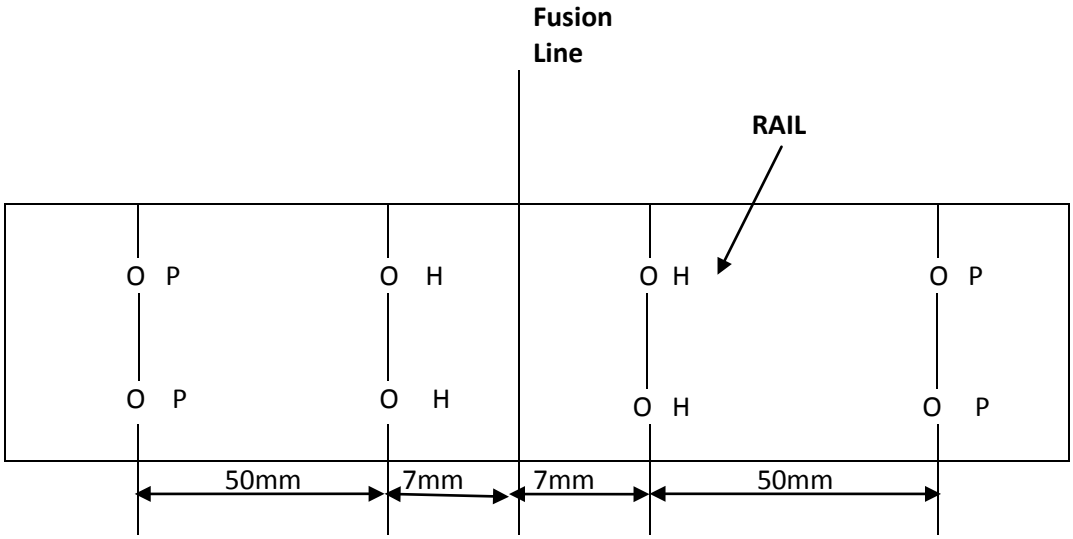

Location of Hardness test shown as small circles

10.2.2 Transverse Test: The finished test weld samples, not less than 1.5 metre long with the weld at the centre shall be subjected to transverse load test in a transverse testing machine in the following manner:-

10.2.2.1 The test joint shall be supported on cylindrical or semi-cylindrical supports having a diameter of 30 to 50mm and distance of one metre between them. In case of 60kg 110 UTS/head hardened rail joints the test span shall be 1.25 metre. The mandrel diameter shall be between 30 to 50mm. The mandrel axis should be perpendicular to the horizontal axis of the rail section and it should be positioned at the centre of the weld. The weld shall be in the centre of the span and loaded in such a manner that the foot of the rail is in tension. The load shall be uniformly and gradually increased. The rate of application of the load should not exceed 2.5 tons/sec. The test joints shall withstand the minimum load and shall show minimum deflection as given in Table 1 without showing any signs of cracking or failure. The minimum deflection values are corresponding to stipulated minimum breaking loads. Results shall be maintained as per proforma given in Annexure-VI 'D'. (ACS-1)

Table 1

VALUES OF MINIMUM BREAKING LOAD AND DEFLECTION IN TRANSVERSE LOAD TEST

SN	Rail Section	Span	Min. breaking load (tonnes)	Min. deflection at centre (mm)	Frequency of testing	
					Stationary FBW Plant	Mobile FBW Plant
1	60 kg (UIC), Grade-1080HH	1.25 m	115	30	1 in 500	1 in 100*
2	60 kg (UIC), Grade-1080Cr.	1.25 m	110	12	-do-	1 in 100*
3	60 kg (UIC) 90 UTS	1m	150	20	1 in 1000	1 in 100*
4	52 kg 90 UTS	1m	115	20	-do-	1 in 100*
5	60 kg UIC MM (72 UTS)	1m	135	30	-do-	1 in 100*
6	52 kg MM (72 UTS)	1m	100	30	-do-	1 in 100*
7	90R MM (72 UTS)	1m	80	30	-do-	1 in 100*
8	75R MM (72 UTS)	1m	70	30	-do-	1 in 100*
9	60 R MM (72UTS)	1m	60	25	-do-	1 in 100*

* Sample joints for first 1,000 joints welded by mobile flash butt welding plant will be tested at frequency of 1 in 100 joints and subsequently at a frequency of 1 in 500 joints.

10.2.2.2 Additional Requirement for Bend Tests

In addition to above requirement for bend test, the following occurrences will require a mandatory bend test:

(a) Immediately following rectification of a welding machine malfunction;
(b) Immediately following machine overhaul or work other than normal maintenance;
(c) Any change to another approved welding procedure, if the procedure has not been used in previous 4 weeks.

10.2.3 Macro examination: One test joint for every 5000 joints welded in case of stationary Flash Butt welding Plant and one test joint for every 1,000 joints welded in case of Mobile Flash Butt Welding Plant shall be subjected to macro examination as per Cl 5.6.4.8 and micro examination as per Cl 5.6.4.10. 100mm length of rail with weld at centre shall be cut and the sample shall be sectioned in vertical longitudinal direction through the weld. One of the sections shall be etched with 5-10% Nitric acid and for confirming any defect found in Macro Examination, Magna flux test should also be carried out. Extent of heat affected zone shall be measured for head, foot and web of the rail. The visible heat affected zone shall be of a normally symmetrical shape about the weld line and fall within the width of 40 mm maximum and 20 mm minimum. The permissible deviation between the maximum and minimum dimension on any weld shall not exceed 5 mm in general. However the limit shall be guided by the value standardized during the procedure for standardization of welding parameters. This requirement shall apply equally to the vertical axis cut through the rail depth and each rail foot tip.

There shall be no evidence of lack of bond, inclusion, cracks or shrinkage. Imperfections that cannot be positively identified by macro examination shall be inspected by micro examination.

In case that flat spots are found, they shall be checked by micro examination at 100 X magnification. If any cracks are found, the process is rejected.

Results shall be maintained as per proforma at Annexure – VI 'E'.

11. HANDLING OF HIGH STRENGTH RAILS (90 UTS, HH AND 110 UTS)

11.1 The 90 UTS head hardened and 110 UTS rails are comparatively brittle having less fracture toughness as compared to 72 UTS (MM) rails. Therefore, such rails require special care in handling. Provisional guidelines for handling and maintenance of such rails are given in Annexure-VII. Flash Butt Welding Plants shall create adequate handling facilities to follow these guidelines.

12. CHECK LIST FOR FLASH BUTT WELDING PLANTS

A check list containing items to be checked daily and weekly is placed at Annexure-VIII. This check list should be followed meticulously as a quality assurance measure.

In order to ensure proper quality of Flash Butt Welds, a list of minimum equipment and machines to be provided in each Flash Butt Welding Plant is placed at Annexure-IX.

13. Welding Team for Mobile Flash Butt Welding Plant

13.1 Welding team may consist of one supervisor and two welders. The educational qualification of supervisor should be min. Diploma in Mechanical/ Electrical Engineering or BSc and that of welder should be minimum class X or equivalent, passed. Welders and supervisor already working in Mobile FBW Plant may continue if Chief Track Engineer/Chief Engineer (construction) is satisfied about the quality of welds by these operators. Zonal Railways shall also ensure periodical training of welders and Supervisors of Mobile Flash Butt Welding Plants.

13.2 Test for competency certificate of welder of Mobile Flash Butt Welding Plant will be conducted by Zonal Railways as per this Manual and after satisfactory result; the competency certificate will be issued by Zonal Railways. For guidance of Zonal Railways, test scheme as well as syllabus for written test and interview is given as under:

13.2.1 Part-I (Written Test and Interview)

13.2.1.1 Written Test

(i) Welding parameters and its influence on quality of welding and heat affected zone.
(ii) Suitability of rail for welding.
(iii) Preparation of rails to be welded including pre-straightening of rails.
(iv) Procedure of welding of rails.
(v) Record of welds.
(vi) Post weld straightening of joints.
(vii) Finishing of joints.
(viii) Marking of joints.
(ix) Testing of welds.
(x) Precautions to avoid defects in Flash Butt Welding rail joints.

13.2.1.2 Interview

A personal interview of these candidates shall be taken by competent authority as per syllabus. The candidate must be conversant with details of Flash Butt Welding of rails and the

machine, welding defects, their causes and remedies. The candidate found suitable in interview shall be allowed for further tests.

13.2..2 Part-II (Practical Test)

Six number of test welds shall be made by welder in presence of competent authority. The length of rail piece shall be minimum 0.75 meters of 90 UTS rails. Any rail section/sections may be used free from any external and internal defects. Examination of welded rail joints shall be done as per clause 10.1.1, 10.1.2, 10.1.3, 10.2.1, 10.2.2 and 10.2.3 of this Manual.

14. Upkeep and Maintenance of Mobile Flash Butt Welding Plants

Quality and quantity of output of Mobile Flash butt Welding Plant depends on health of machine, therefore their proper upkeep and maintenance is utmost importance. Periodical maintenance of Mobile Flash Butt Welding Plants shall be done as per procedure and frequency laid down by OEM (Original equipment Manufacturer) with genuine spare part either supplied by OEM or procured from sources recommended by OEM.

14.1 Periodical Inspection of Mobile Flash Butt Welding Plant

Mobile Flash Butt Welding Plant shall be inspected by OEM or his authorized representative at an interval of two years or execution of 20,000 joints whichever is earlier to conduct technical audit of its health. Maintenance shall be carryout in accordance with his advice.

14.2 Availability of Sufficient Stock of Genuine Spares

Mobile Flash Butt Welding Plant shall have sufficient stock of genuine spare parts and consumables to ensure its minimum down time.

Annexure-I
(Para 5.4)

POST WELD CONTROLLED COOLING TREATMENT FOR 110 UTS ALLOY STEEL RAILS

The rails being 60 Kg. Cr-Mn alloy steel rails are required to be subjected to controlled post weld cooling treatment, as detailed below, so as to avoid formation of undesirable micro-structure and cracks in weld and HAZ.

(i) Asbestos cement pipe of internal dia. 250mm – 300mm, wall thickness 15 to 25mm and length not less than 1 metre shall be installed after the flash butt welding machine along the welding line. Necessary arrangement to roll the rail through this pipe shall be made so that the pipe walls are not damaged due to movement of rails. Two holes of 30mm dia. (to suit the burner head of kerosene blow lamp) on the horizontal diameter are to be made as shown in Fig.5.4(a), in such a way that the holes are staggered by 25-30 mm with respect to the mid length of the pipe. Two nos. kerosene blow lamps of about 1.5 litres capacity are fixed through these holes in such a way that flames from the burners strike at the centre of the web on each side. The air pressure in the burners is to be adjusted in such a way that blue flame is always available from these. Asbestos cloth/asbestos lined mild steel gadget are to be always kept ready to cover both the ends of the pipe, to the extent possible so that cool air draught is not allowed to enter inside the pipe. The blow lamp burners are kept in 'ON' position at least 10 minutes before the flash butt welded joint enters the pipe to ensure warming up of the pipe and the enclosed air pocket to retard the rate of cooling.

(ii) After stripping, the welded joint should be quickly moved forward and brought exactly at the mid length of the A.C. pipe. This operation is to be completed within 120 seconds of butting. At this time, the temperature of the weld is generally above 850 degree C. Depending upon the travel speed of the rail panel, the mid length of the pipe may be located at about 13m (rail length) from the welding head to facilitate setting up of the next rail joint to be welded during the period the rail joint already welded is being slowly cooled. The flash butt welded joint shall be kept inside the A.C. pipe for not less than 10 minutes till the weld temperature drops to about 400-450 degree C. Two standby kerosene blow lamp burners in perfect working condition shall be kept ready to be utilised in case of necessity.

Annexure-II
(Para 5.4)

POST WELD AIR QUENCHING TREATMENT FOR FLASH BUTT WELDING OF 60 KG HEAD HARDENED RAILS

During welding of head hardened rails using the normal welding procedure, the average hardness of the HAZ of the rail becomes considerably less than the parent rail hardness. This lower hardness is due to transformation of rail steel occurring at a cooling rate much lower than that achieved during the original head hardening operation. Such a hardness difference can lead to differential plastic deformation during the wheel-rail contact which may cause localised cupping on the running surface at the welds.

Head hardened rails, therefore, must be subjected to controlled cooling treatment (slack quench) to improve the sagging heat affected zone hardness.

A fabricated air quenching gadget as shown in Figure 5.4(b) shall be used for enhanced cooling of the rail joints made with head hardened rails. The length of this gadget is approx. 250mm and width 190mm. There are series of drilled holes of 3mm diameter in the gadget and their position is shown in figure. The gap maintained between the inner faces of the gadget is approx. 120mm which will enable gap of approx. 25mm between the railhead side surfaces and the gadget. This will result in efficient application of air quenching jet. Within one minute of welding, air quenching should be carried out while the rail surface temperature is in the region 900-950^0 C. The air pressure should be approximately 2kg/cm^2 and duration of application should be about 1 minute.

Annexure-III
(Para 6)

RECORD OF WELDS

MACHINE

1. Date of welding
2. Shift (day/night)
3. Joint No.
4. Length of rail
5. Section of rail
6. Welding current (primary, amps)
7. Primary voltage (volts)
8. Clamping pressure Kg/cm^2
9. Butting pressure Kg/cm^2
10. No. of pre-heats
11. Pre-heating time On……..Off……..
12. Burn off time (sec.)
13. Flashing time (sec.)
14. Post welding heat treatment if any
15. Whether automatic weld record chart available
16. Remarks (Any change of voltage during welding etc.)
17. Signature of welder
18. Signature of Foreman

ANNEXURE – IV
(Para 8)

FINISHING TOLERANCES FOR WELDS

A. Welds with new rails

(i)	Vertical misalignment :	+0.3mm - 0.0 mm	at the centre of a 1 m straight edge.
(ii)	Lateral misalignment :	±0.3mm at the centre of a 1 m straight edge.	
(iii)	Head finishing (in width):	Side of rail head should be finished to :- ± 0.25 mm on gauge side at the centre of 10 cm straight edge.	
(iv)	Finishing of top table surface:	+ 0.2mm - 0.0mm	at the centre of 10cm straight edge
(v)	Web zone (under side of head, web, top of base, both fillet each side):	+ 3.0 mm - 0.0 mm	of the parent contour

(vi) Upper sides, under surfaces and edges of rail foot shall be ground smooth. The edges of foot should be rounded and bottom of rail foot ground smooth without any minus tolerances to ensure proper seating on sleepers, unhindered movement of welded panels on end unloading rakes, avoid damage to elastic rail pads and eliminate stress riser.

NOTE: Tolerances for BSP rail rolled as per Explanatory Note to IRST-12/2009 shall be as under:-

(a)	Vertical misalignment-	+ 0.4 mm – 0.0 mm	at the centre of 1m straight edge.
(b)	Lateral misalignment -	±0.4mm	-do-

B. Welds with old rails

(i)	Vertical misalignment:	± 0.5mm at the centre of a 1m straight edge.
(ii)	Lateral misalignment:	± 0.5 mm at the centre of a 1m straight edge.
(iii)	Head finishing (on sides):	± 0.3 mm on the gauge side at the centre of a 10 cm straight edge.
(iv)	Head finishing (on top table surface) :	± 0.2 mm on the gauge side at the centre of a 10cm straight edge.
(v)	Web zone (under side of head, web, top of base and both fillets on each side):	+ 3.0 mm, − 0.0 mm } of parent contour

(vi) Upper sides, under surfaces and edges of rail foot shall be ground smooth. The edges of foot should be rounded and bottom of rail foot ground smooth without any minus tolerances to ensure proper seating on sleepers, unhindered movement of welded panels on end unloading rakes, avoid damage to elastic rail pads and eliminate stress riser.

(vii) The above tolerances are finished tolerances of welds inclusive of tolerances of rail.

Annexure-V
(Para 10)

PRECAUTIONS TO AVOID DEFECTS IN FLASH BUTT WELDED RAIL JOINTS

Following precautions shall be taken to avoid various defects in the welded joints:-

1. Oxide inclusion : The rail end faces and the adjoining surface of the rail profile to a width of about 25mm all round shall be cleaned properly by portable grinders or brushing machine or shot blasting to remove loose scale, rust, scabs, dust, paint etc. Oil and grease, if present shall be removed by Carbon Tetrachloride or Benzene.

2. Lack of fusion – Preheating cycle and time, flashing and butting stroke as standardised shall be strictly maintained during welding to avoid this defect.

3. Poor joints due to defect in rails – Rail ends having cracks and other visible rolling defects should be cropped before welding.

4. Notches and chisel marks adjacent to the weld joints. During stripping by chiseling and finishing by grinding, care should be taken that notches, dents or chisel marks are not formed on the rail surface as such flaws may act as stress raisers in service leading to premature failure.

5. Copper penetration/arching on rail foot bottom surface. During flash butt welding, the two copper blocks (electrodes) below the rails get worn out and grooved/dented due to rail movement. Besides this, after the flashing/burning off operations, lot of loose oxides of metal are deposited on the copper blocks. Due to the above reasons, current flow between the rail foot surfaces and the copper block is not continuous resulting in arcing and formation of local melting/denting and even copper penetration at the rail foot surface. Such affected area results in premature fracture. Therefore, after each operation loose oxide/metal shall be cleaned by brushing the copper block surfaces and the copper blocks shall be periodically reconditioned or replaced with new ones.

6. Use of treated water for cooling system – The pipes/tubes for circulation of water for cooling purpose are, generally, of small diameter. Due to presence of impurities in water, scaling on the inner side of the pipe takes place resulting in less circulation of cooling water and consequent problems. Therefore, suitably treated water should be used for cooling system. The welding plant should not be operated if the cooling system is non-functional.

7. End squareness of rail end faces must be ensured. Better weld strength with minimum value and nearly parallel shape of HAZ can be achieved using perfect matching of rail ends.

8. Secondary output of current should be sufficient enough to achieve complete fusion of butting faces of rails.

9. Butting stroke should be sufficient for complete coalescence (Not less than 12 mm).

10. Throughout uniform and smooth auto trimming of the squeezed out metal and complete grinding using profile grinder around the butt joint is essential.

11. Minimum and nearly parallel Heat affected Zone of the joint should be achieved by setting the weld parameters.

12. Facilities for auto recording of weld parameters including final butting pressure shall be available.

13. When welding is carried out in-situ, minimum 20 minutes time after trimming is required to pass train through the weld with proper packing and support below the joint.

Annexure-VIA
(Para 10.1.2)

DIMENSIONAL CHECK OF WELDED JOINTS (AFTER FINISHING)

1. Date, month and year
2. Joint No.
3. Rail section
4. 1m straight edge Top/ LH/ RH
5. 10 cm straight edge Top /LH/ RH
6. Remarks
7. Signature
8. Summary – (at the end of the month)

No. of joints welded during the month (Rail section-wise)

No. of joints checked (Rail section-wise)

No. of joints rejected (Rail section-wise)

Annexure-VIB
(Para 10.1.3)

ULTRASONIC TESTING OF WELDED JOINTS

Date/Month/year/Name of Operator Welding Machine USFD

1. Joint No.
2. Rail section & chemistry
3. Day Night shift
4. Result of testing
5. If defective, details of flaw Defective zone Flaw peak pattern Head/Web/Foot Probe Trace
6. Remarks
7. Signature

Summary (at the end of the month)

No. of joints welded during the month (Rail section-wise)

No. of joints tested (Rail section-wise)

No. of joints found defective (Rail section-wise)

ANNEXURE-VIC
(Para 10.2.1)

HARDNESS TEST OF WELDED JOINTS

1. Date, month and year
2. Joint No.
3. Rail section & UTS
4. Hardness (BHN)
   Parent rail
   Heat affected zone

5. Remarks
6. Operator's Signature

Summary (at the end of the month)

No. of joints welded during the month (Rail section-wise)

No. of joints tested (Rail section-wise)

No. of joints found defective (Rail section-wise)

ANNEXURE-VID
(Para 10.2.2)

TRANSVERSE TESTING OF WELDED JOINTS

1. Date, month and year
2. Joint no.
3. Rail section & UTS
4. Machine on which welded
5. Load applied (tonne)
6. Deflection (mm)
7. Span (m)
8. Broken or not
9. Remarks
10. Signature
11. Summary – (at the end of the month)

No. of joints welded during the month (Rail section & UTS-wise)

No. of joints tested (Rail section & UTS-wise)

No. of joints failed (Rail section & UTS-wise)

ANNEXURE-VIE
(Para 10.2.3)

MACRO EXAMINATION OF WELDED JOINTS

1. Date, month and year
2. Joint No.
3. Rail section
4. Machine on which welded
5. Extent of head affected zone (mm)

   Head
   Web
   Foot

6. Result of visual examination
7. Remarks
8. Signature

ANNEXURE-VII
(Para 11)

HANDLING INSTRUCTIONS FOR 90 UTS AND HEAD HARDENED RAILS

1. Protection of straightness: Barely visible straightness variations for example, a deflection of 0.75 mm over 1.5 metres span, renders a rail unacceptable and required careful handling and stacking. Therefore,

AVOID

- Heavy static loading
- Sudden impact
- Localised point or line contact loading in stacking.
- Excessive end drop and flange overlaps while lifting/moving.
- Criss-cross stacking of rails of alternative layers as at right angles as far as possible.

DO

- Keep rails horizontal and straight while lifting/moving
- Stack rails of same length on firm level base of well-drained platform, preferably of concrete, as per drg. No.RDSO/T-6219.
- Stack subsequent layers on uniformly placed spacers in vertical alignment with base supports.
- Keep rail ends in vertical alignment.
- Place rail of shorter length in upper layers.

2. **Protection of rail surface:** Surface notches of even less than 0.75 mm in depth are liable to cause rail fracture in service. Therefore,

AVOID

- Impact abrasion of rails against separators in wagons.

- Round link chain slings for securing the rails.

DO

- Use conventional slings for lifting rails made of flat link chains.
- Lifting of rails preferably with Magnet lifting device

3. **Prevention of metallurgical damage:** These rails are thermally very sensitive and are likely to develop metallurgical defects, if exposed to localised heating, which produces very hard, brittle and cracked metallurgical structures which may lead to sudden failures. Therefore,

AVOID

- Heating, flame cutting, on or adjacent to rails.
- Contact with electric arcs and molten metal splashes, i.e. from loose cables or adjacent welding operations.

DO

- Flame cutting when found essential, after preheating minimum of 10cm of rail length on either side of the cut to about 250-350 degree C by uniform movement of heating torch.

4. **Protection from contact with injurious substances:** These rails can be withstand normal degree of rusting but localised corrosion pitting may cause subsequent rail fractures. Therefore,

AVOID

- Contact with injurious substances which produce high corrosion of steel, i.e. acids, alkalis, salts, etc.

DO

- Stack rails on well drained platform preferably of concrete as per drg. No.RDSO/T-6219.

5. **Slinging principles:** The single point slinging increases risk of excessive bending and surface damage to the rails. The overhang beyond the outer lifting point should not be greater than one-half the distance between lifting points. Therefore,

AVOID

- Single point slinging.

DO

- Use two point slinging for rail length up to 13m.

- Recommended locations of lifting points for various rail lengths are tabulated below:

Rail length metres	No. of lifting points	Distance between lifting points (m)	Max. rail end overhang (m)
12-13	2	6-6.5	3-3.25
26	4	6.5	3.25
39	6	6.5	3.25
130	20	6.5	3.25
260	40	6.5	3.25

- Use of lifting beams fitted with slings is desirable.

6. Safety of Personnel

AVOID

- Standing under suspended loads.

DO

- Use protective gloves and clothing to minimise the risk of skin abrasion.

- Wear distinctive coloured helmet and clothing for easy identification by crane and machinery drivers to avoid accidents.

ANNEXURE-VIII
(Para 12)

CHECK LIST FOR FLASH BUTT WELDING PLANTS

		Yes	No	Not Applicable
1.	ITEMS TO BE CHECKED DAILY			
1.1	UNLOADING OF LOOSE RAILS			
1.1.1	Rails of same section and UTS are stacked together			
1.1.2	Spacers are provided between successive layers of rails.			
1.1.3	Rail are stacked in head up position			
1.1.4	Numbers of layers in each stack is not exceeding 15.			
1.2	FEEDING OF RAILS			
1.2.1	Rails ends have been checked for – (a) Straightness (b) Squareness (c) Width of head and height			
1.2.2	Fish bolt holes/any other drilled are chamfered.			
1.2.3	Rail ends are cleaned of rust, scales, paint etc.			
1.2.4	Top of rail head and bottom of rail foot are clear at electrode position.			
1.2.5	Grease/oil at rail ends, if present has been removed with carbon tetrachloride/ Benzene.			
1.3	WELDING			
1.3.1	Alignment of rail ends is proper and checked with 1m straight edge.			
1.3.2	Electrodes surfaces are clean (cleaning after every welding operation)			
1.3.3	Stipulated oil and air pressure is available in the welding machine.			
1.3.4	Record of each weld is kept in prescribed proforma.			
1.4	FINISHING OF JOINT			
1.4.1	Stripping/trimming of entire weld cross section has been done.			
1.4.2	Notches/undercuts are avoided while stripping with pneumatic chisel			

1.4.3	Post weld controlled cooling is done for Cr-Mn/head hardened rails.				
1.4.4	Joint has been checked for – (a) Straightness on (i) 10 cm st. edge (ii) 1 m st. edge (b) Dimensional tolerances				
1.4.5	Joint is numbered				
1.5	TESTING OF JOINT				
1.5.1	Joint is ultrasonically tested using normal, D.C. 70^0 and 45° probes.				
1.5.2	Ultrasonically defective joint is prominently marked				
1.5.3	Joint is dimensionally correct (checking with 10 cm & 1 m straight edge) .				
1.5.4	Records of each test are maintained in prescribed proforma.				
1.6	DESPATCH OF PANELS				
1.6.1	Panels of same rail section and UTS are stacked together				
1.6.2	Spacers are provided between successive layers of panels				
1.6.3	Panels are stacked in head up position				
1.6.4	Number of layers of panels is not exceeding 15.				
1.6.5	Rails are placed on rollers without impact.				
1.6.6	Loading of welded panels in EUR is being done in pairs of equal length				
	Signature of Shop Supdt./Supervisor				
2	ITEMS TO BE CHECKED WEEKLY				
2.1	Electrodes have been machined before formation of 1mm deep groove.				
2.2	Standard welding parameters are correctly set for the type and section of rails being welded.				
2.3	Panels with defective joints are separately stacked.				
2.4	Movement of hoists in lateral and vertical direction is well synchronized.				
2.5	Work spot is clean and tidy.				

2.6	While unloading, the rails are held at two points 6-6.5m apart and overhang of ends does not exceed 3-3.5m.				
2.7	Rails/panels are stacked on leveled and well drained platform and they have no contact with soil.				
2.8	Transverse testing & macro examinations of test welds is done at prescribed frequency and records are maintained.				
2.9	Transverse testing machine is calibrated.				
2.10	Workmen are provided with required protective clothing.				

Signature of XEN/Dy.CE

ANNEXURE-IX
(Para 12)

LIST OF MINIMUM EQUIPMENTS & MACHINES REQUIRED FOR FLASH BUTT WELDING PLANTS

I. TESTING FACILITIES

1. Transverse Load Testing Machine of 200t capacity.
2. Hardness testing machine.
3. USFD testing machine (preferably on line tester).
4. Equipment for Macro and Magna flux examination.

II. PREWELDING EQUIPMENTS

1. Pre-straightening machine.
2. Portable grinders.
3. Shot blasting machines.
4. Mechanical rolling system for feeding of single rails for welding.
5. Abrasive rail cutting machines.

III. POST WELDING MACHINE

1. Weld stripping machine.
2. Profile grinders.
3. Post straightening machine.
4. Equipments and fixture for post weld controlled cooling.
5. Equipments and fixture for post weld air quenching.
6. Automatic weld recorders.
7. Arrangements for availability of treated water for cooling system.

IV. HANDLING/TRANSPORTATION AND OTHER EQUIPMENTS

1. Electric Hoists/Gantries in adequate numbers for unloading of single rail from wagons.
2. Electric Hoists/Gantries in adequate numbers with centralised control panel capable of loading/handling of rails up to 20 rail panels.
3. Motorized conveyor line for feeding and welding of rails.
4. Arrangement of stacking of single rails and 20 rail welded panels with capability of mechanical handling (capacity to handle to match with plant production).
5. Generating Diesel sets of adequate capacity for standing arrangements.
6. Independent water supply and water cooling system.
7. Provision of chilling plant for cooling of oil to maintain hydraulic pressure specially for summers.
8. Adequate number of End Unloading Rakes.
9. Adequate line capacity for receiving rails and for dispatch of welded rail panels.
10. Other minor tools and plants required for day to day repair and maintenance.

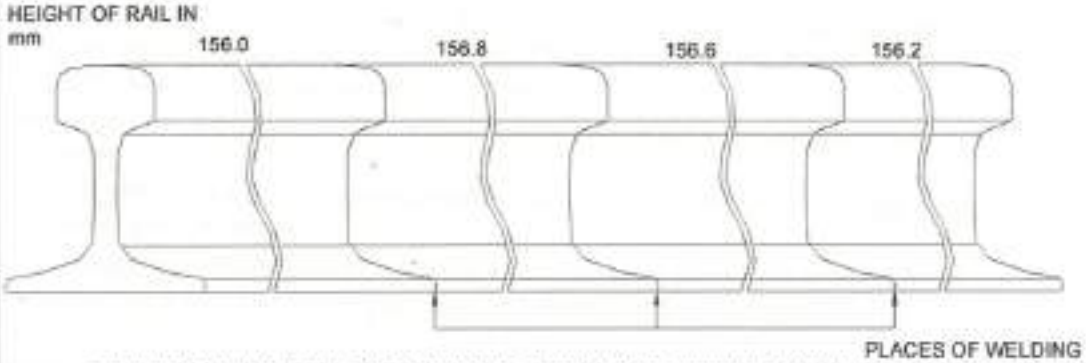

THE INDIVIDUAL WELDED ENDS MAY HAVE A MAXIMUM DIFFERENCE IN HEIGHT OF 1.2* mm AT THE WELDED JOINTS

FIG : 3.2 SORTING OF RAILS TO BE WELDED

* FOR RAILS MANUFACTURED BY SAIL WITH DISPENSATIONS, THIS VALUE MAY BE 1.5 mm

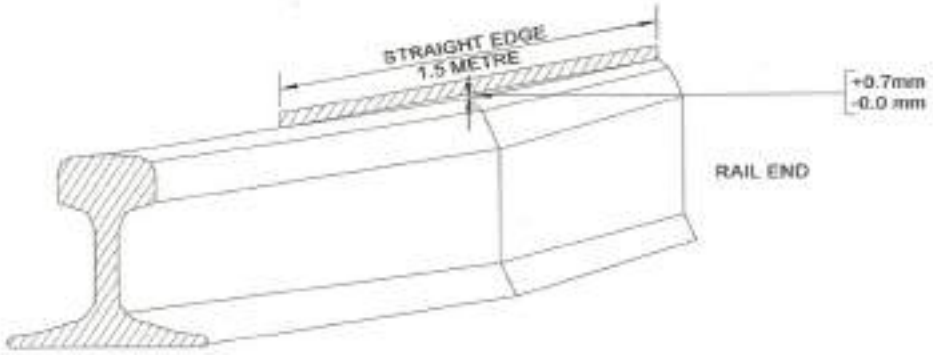

ELEVATION

FIG :3.4(a) TOLERANCE ON THE END BENDS IN THE VERTICAL PLANE

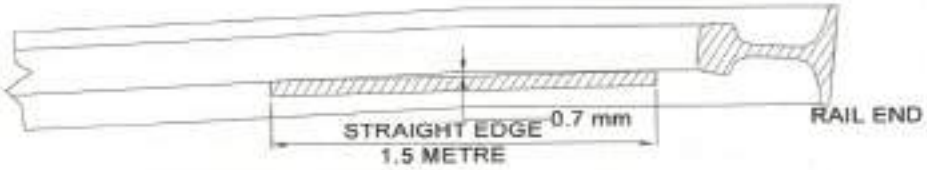

PLAN

FIG :3.4(b)

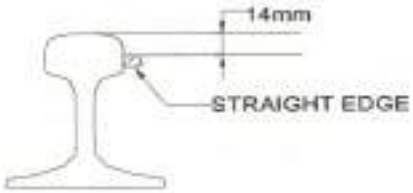

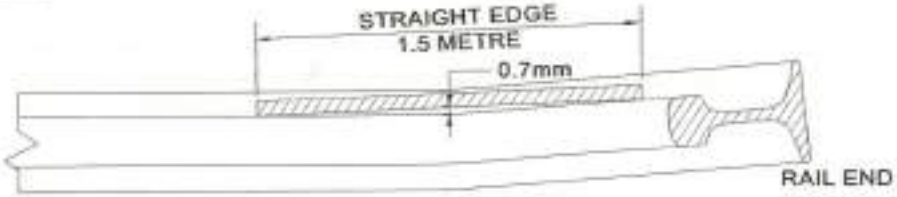

PLAN

FIG : 3.4(c) TOLERANCE ON THE END BENDS IN THE HORIZONTAL PLANE

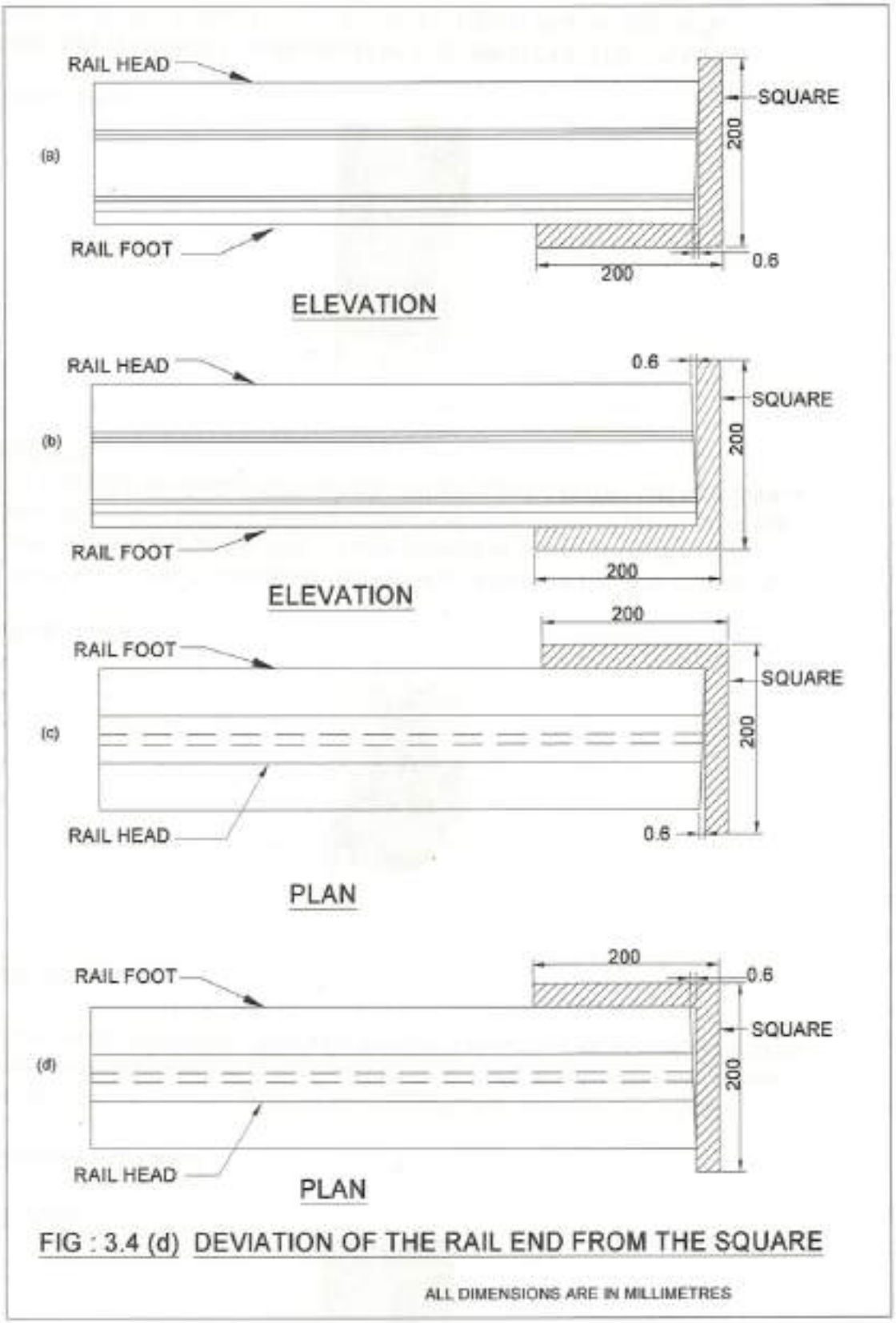

FIG : 3.4 (d) DEVIATION OF THE RAIL END FROM THE SQUARE

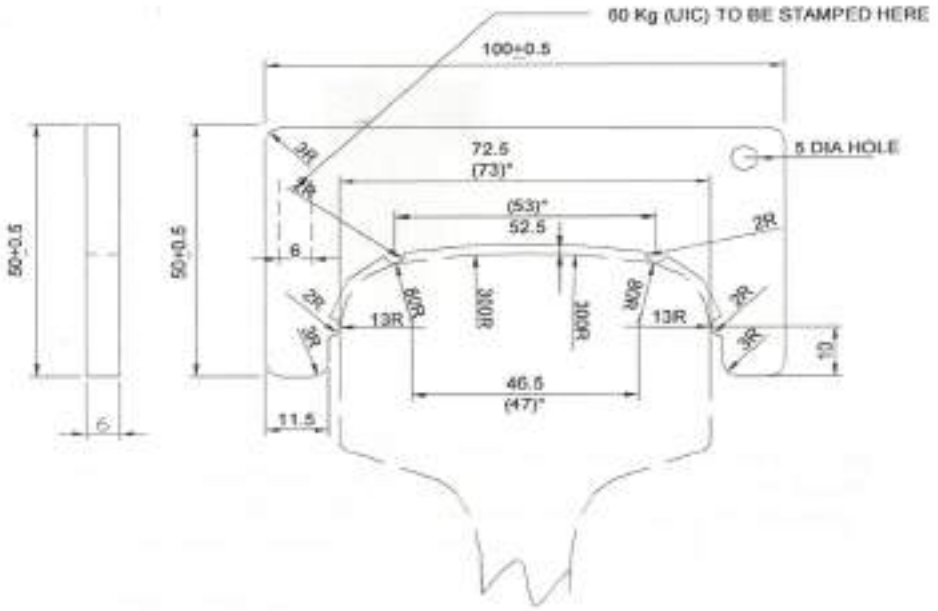

FIG : 4.2(a) HEAD WIDTH CHECKING GAUGE FOR 60 Kg (UIC) RAILS

* DIMENSIONS SHOWN IN BRACKETS ARE FOR RAILS MANUFACTURED BY SAIL WITH DISPENSIONS.
ALL DIMENSIONS ARE IN MILLIMETRES

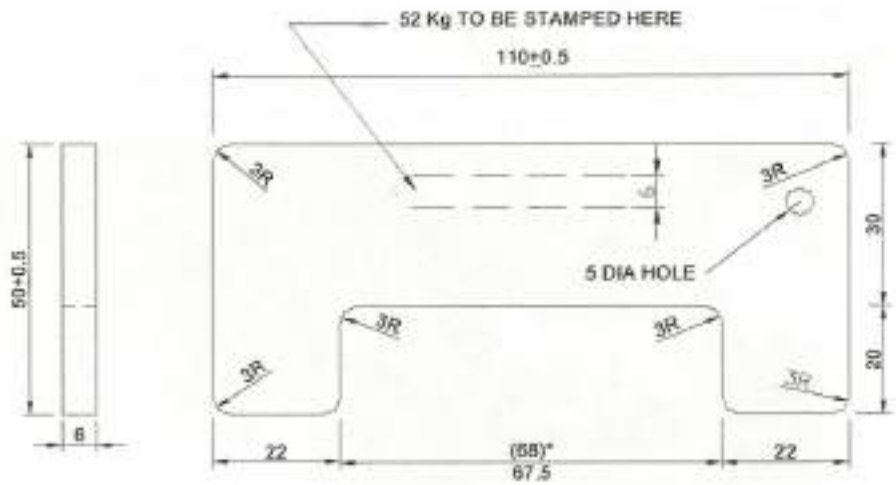

FIG : 4.2 (b) HEAD WIDTH CHECKING GAUGE FOR 52 Kg RAILS

* DIMENSIONS SHOWN IN BRACKETS ARE FOR RAILS MANUFACTURED BY SAIL WITH DISPENSATIONS.
ALL DIMENSIONS ARE IN MILLIMETRES.

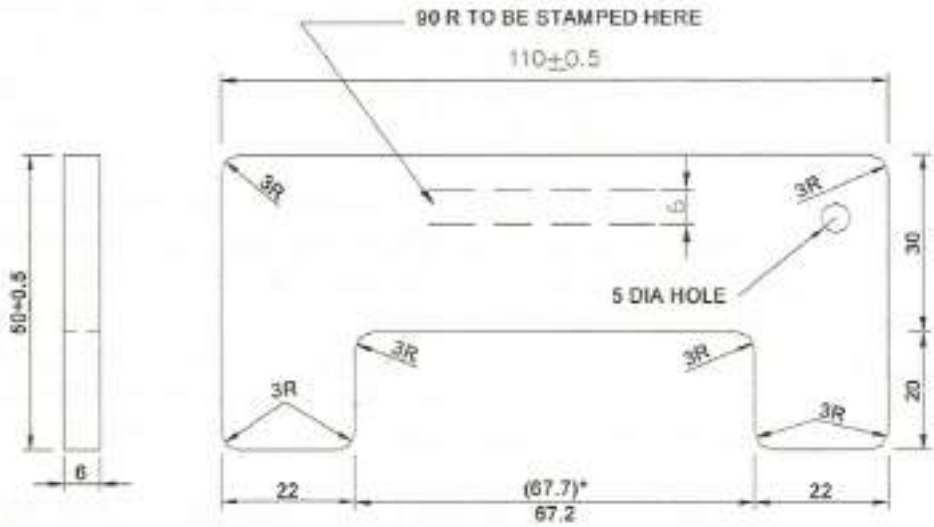

FIG : 4.2 (c) HEAD WIDTH CHECKING GAUGE FOR 90 R RAILS

* DIMENSIONS SHOWN IN BRACKETS ARE FOR RAILS MANUFACTURED BY SAIL WITH DISPENSATIONS.
ALL DIMENSIONS ARE IN MILLIMETRES.

ENCLOSURE TO ANNEXURE -I

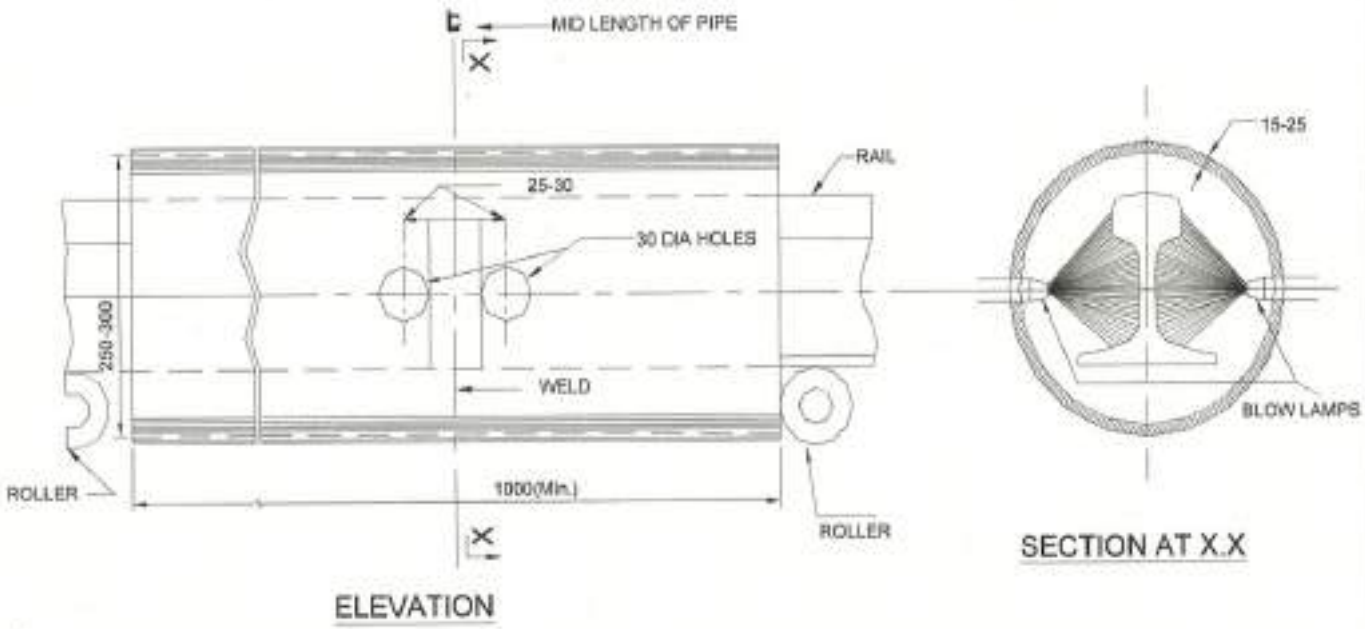

FIG :5.4(a) DETAILS OF A.C. PIPE ARRANGEMENT FOR CONTROLLED COOLING

ALL DIMENSIONS ARE IN MILLIMETRES

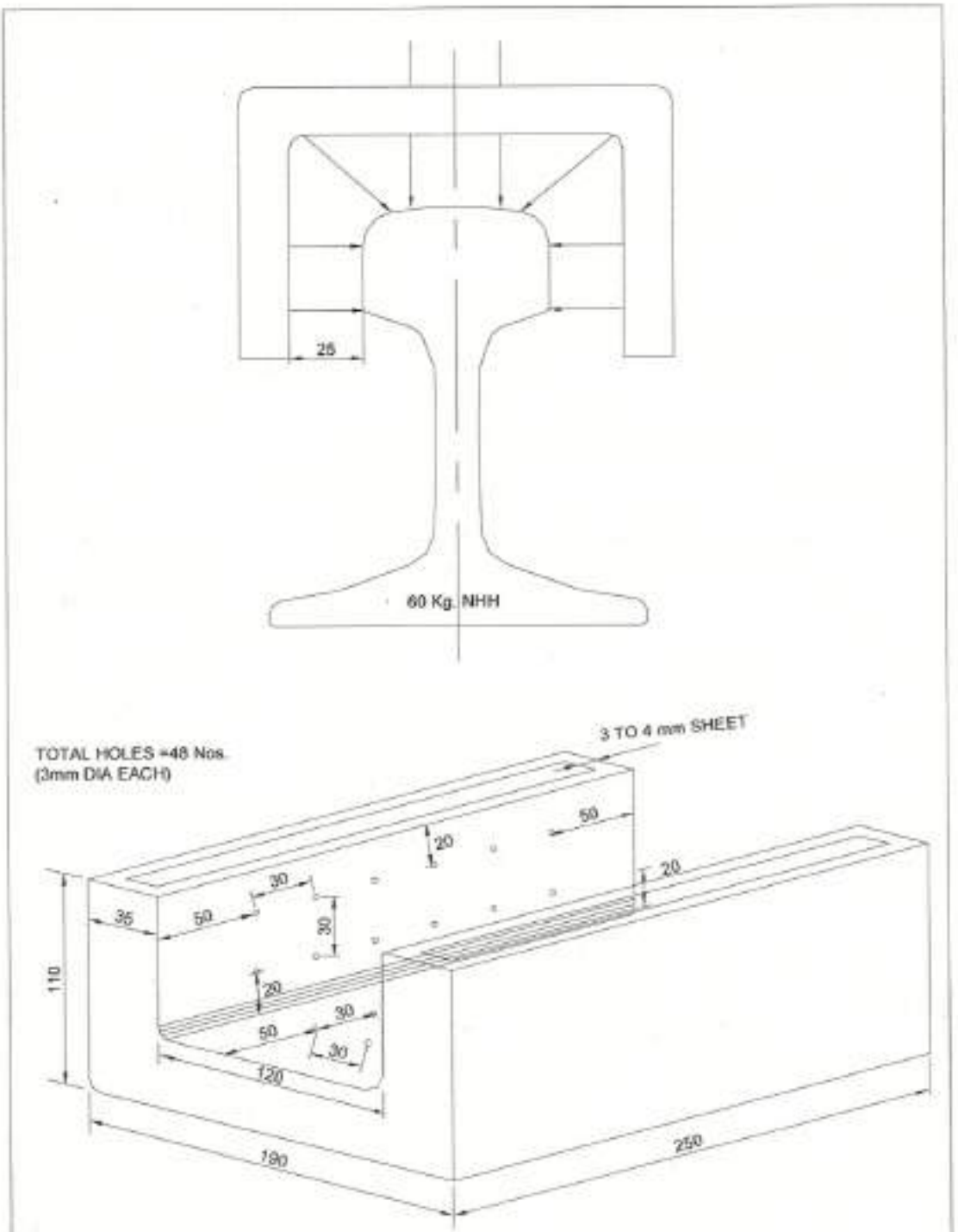

FIG :5.4 (b) AIR QUENCHING GADGET FOR ENHANCHED COOLING OF HH RAIL JOINTS

ALL DIMENSIONS ARE IN MILLIMETRES

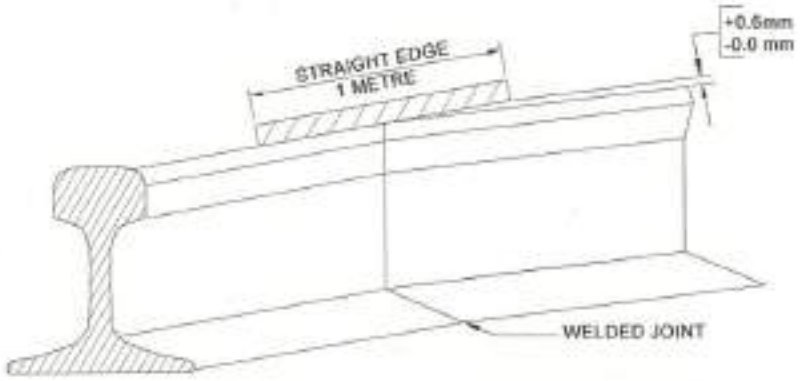

FIG :8(a) TOLERANCE FOR VERTICAL MISALIGNMENT OF WELDED JOINT WITH NEW RAILS

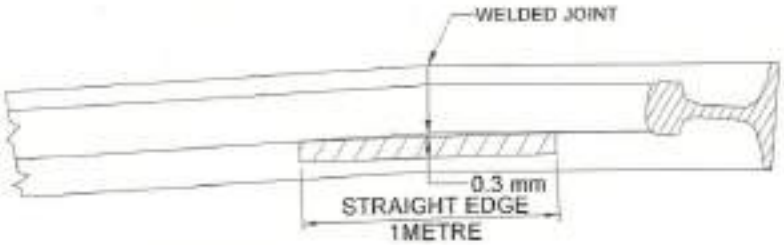

FIG :8(b) TOLERANCE FOR LATERAL MISALIGNMENT OF WELDED JOINT WITH NEW RAILS

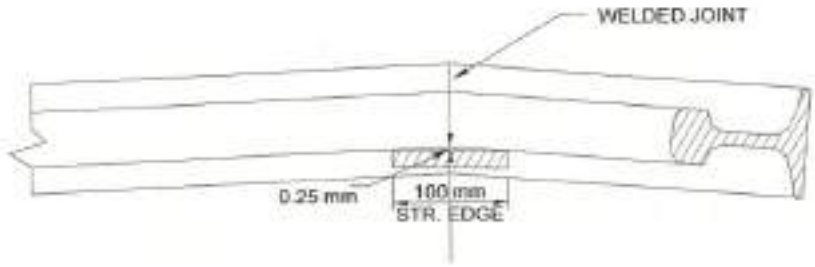

FIG :8(c) TOLERANCE FOR FINISHING ON SIDES OF HEAD OF WELDED JOINT WITH NEW RAILS

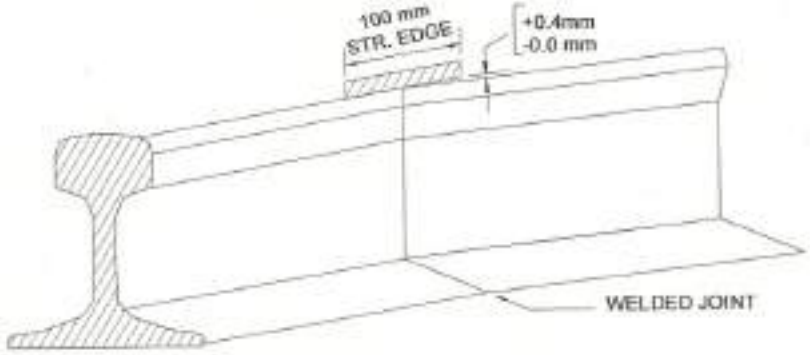

FIG :8(d) TOLERANCE FOR FINISHING TOP TABLE SURFACE OF WELDED JOINT WITH NEW RAILS

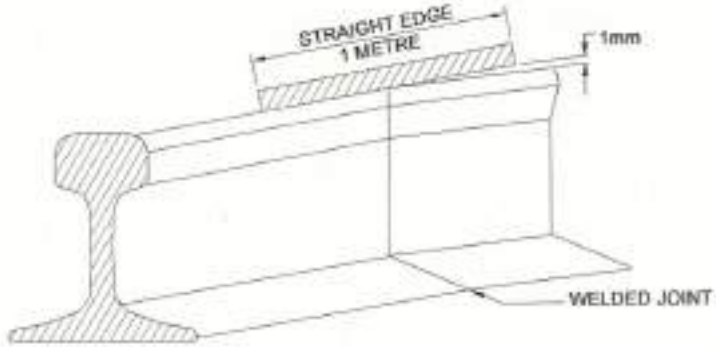

FIG :8(e) TOLERANCE FOR VERTICAL MISALIGNMENT OF HIGH WELDED JOINT WITH OLD RAILS

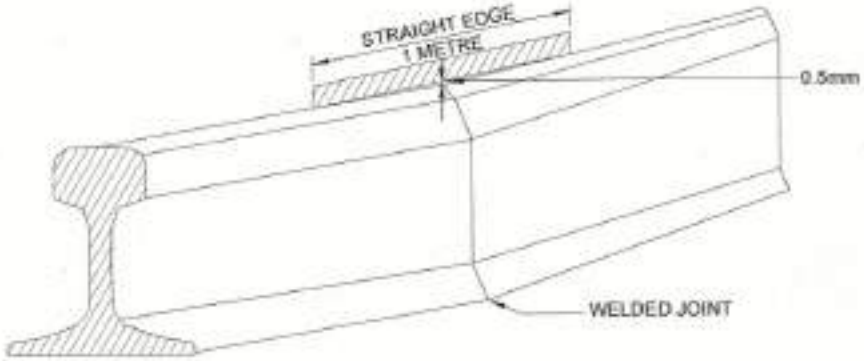

FIG :8(f) TOLERANCE FOR VERTICAL MISALIGNMENT OF LOW WELDED JOINT WITH OLD RAILS

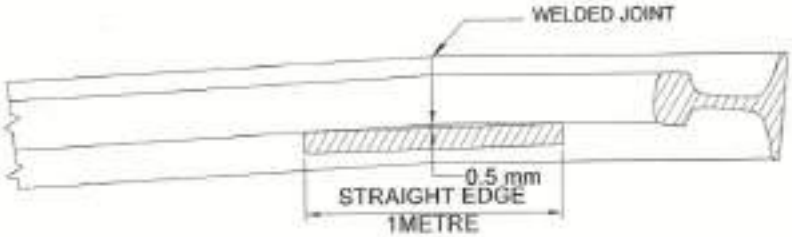

FIG :8(g) TOLERANCE FOR LATERAL MISALIGNMENT OF WELDED JOINT WITH OLD RAILS

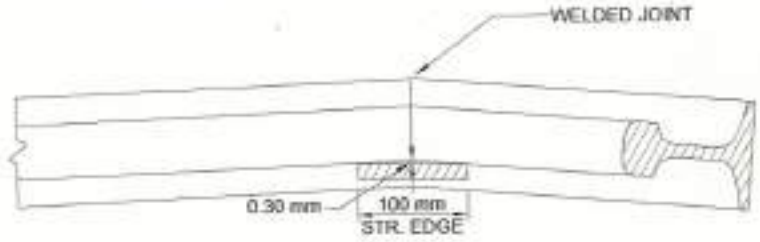

FIG :8(h) TOLERANCE FOR FINISHING ON SIDES OF HEAD OF WELDED JOINT WITH OLD RAILS

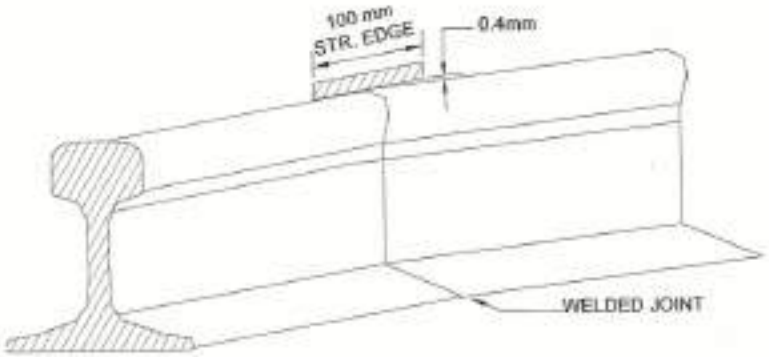

FIG :8(i) TOLERANCE FOR FINISHING TOP TABLE SURFACE OF WELDED JOINT WITH OLD RAILS (HIGH JOINT)

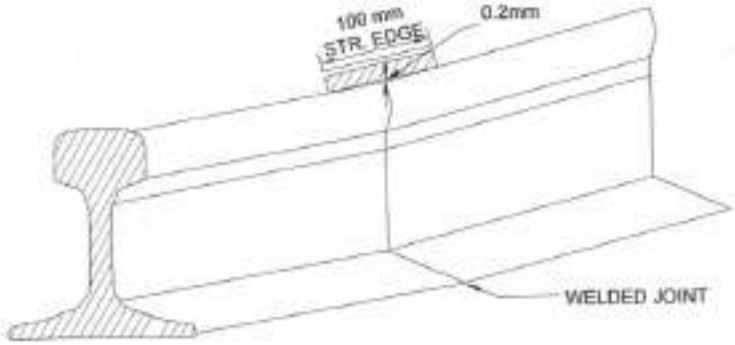

FIG :8(j) TOLERANCE FOR FINISHING TOP TABLE SURFACE OF WELDED JOINT WITH OLD RAILS (LOW JOINT)

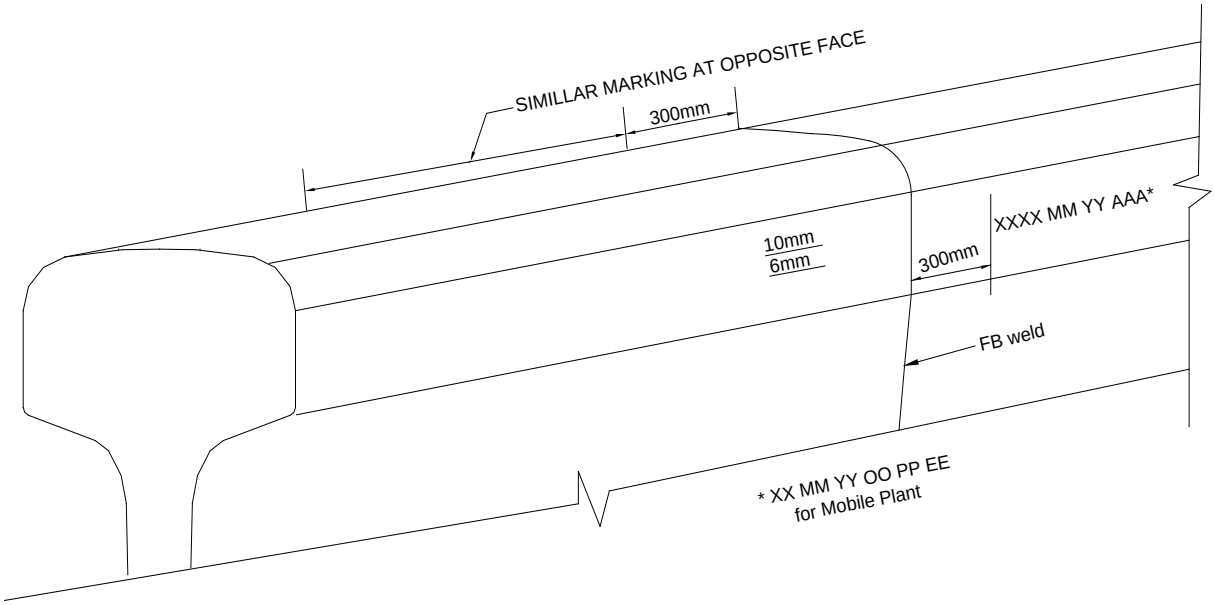

FIG: 9.0 LOCATION OF MARKING OF WELD

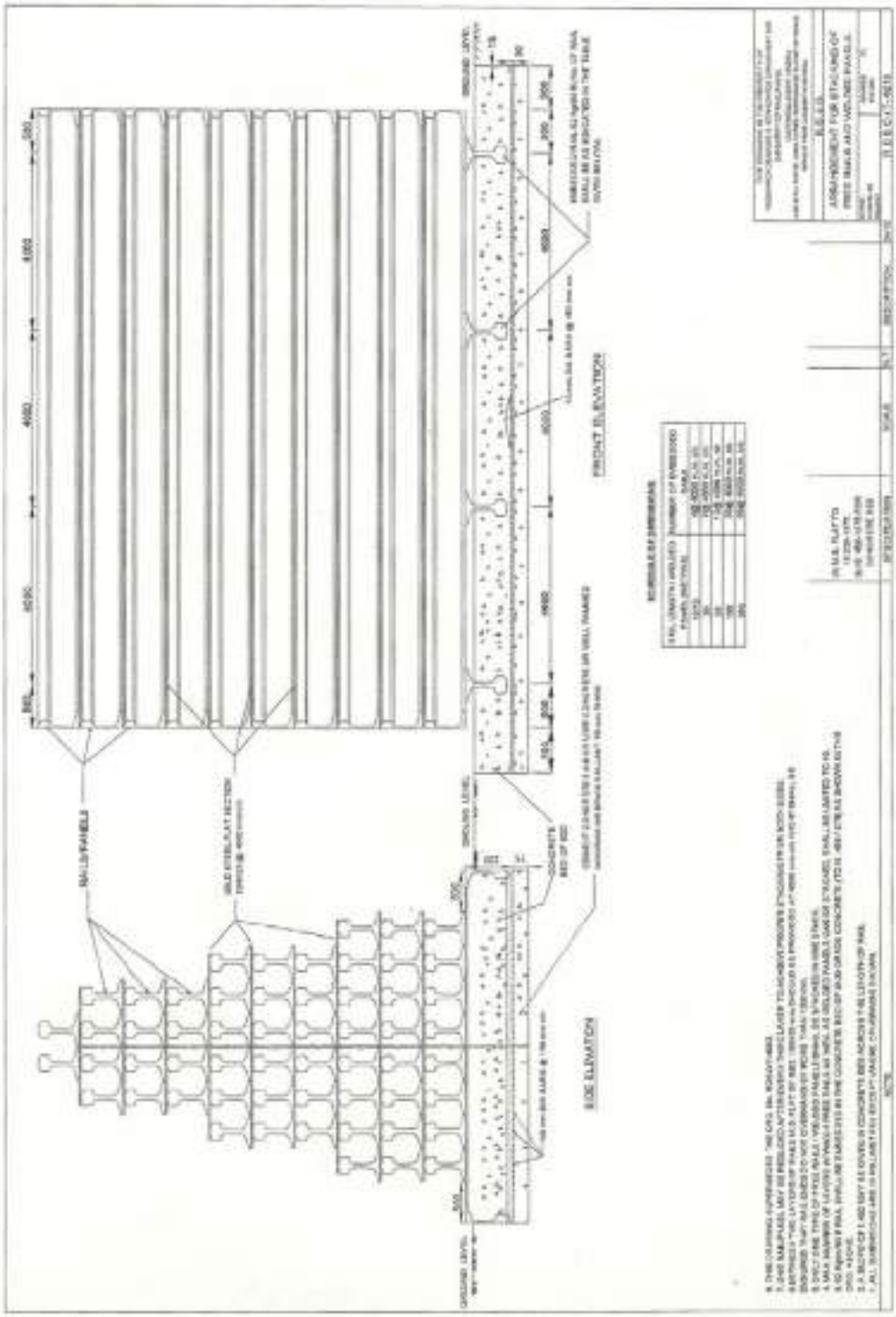
FRONT ELEVATION
SIDE ELEVATION

Addendum & Corrigendum Slip No.1 of 2012
To
Manual for Flash Butt Welding of Rails (Revised Jan 2012)

1. **Clause 10.2.2.1:** Existing clause shall be replaced with following:

   "The test joint shall be supported on cylindrical or semi-cylindrical supports having a diameter of 30 to 50mm and distance of one metre between them. In case of 60kg 110 UTS/head hardened rail joints the test span shall be 1.25 metre. The mandrel diameter shall be between 30 to 50mm. The mandrel axis should be perpendicular to the horizontal axis of the rail section and it should be positioned at the centre of the weld. The weld shall be in the centre of the span and loaded in such a manner that the foot of the rail is in tension. The load shall be uniformly and gradually increased. The rate of application of the load should not exceed 2.5 tons/sec. The test joints shall withstand the minimum load and shall show minimum deflection as given in Table 1 without showing any signs of cracking or failure. Results shall be maintained as per proforma given in Annexure-VI 'D'."
2. A new para 10.2.2.1(a) shall be added as under:
   "The test weld shall withstand minimum transverse breaking load as indicated in column 4 at table 1. The deflection at center at the actual transverse breaking load shall not be less than that specified in column 5 of table 1."
3. Heading of column 5 of table 1 shall be replaced with following:
   "Minimum deflection in mm at the center at the actual transverse breaking load."

Addendum & Corrigendum Slip No. 2
To
Manual for Flash Butt Welding of Rails (Revised Jan 2012)

1. **Clause 5.6.2 (ACS-2) :** Existing clause shall be replaced with following:

   5.6.2 Approval of QAP:
   The Quality Assurance Programme (QAP) of each individual Flash Butt Welding Plant shall be got approved by RDSO.

   (a) For stationary welding Plant, the Quality Assurance Programme (QAP) shall be submitted to RDSO through concerned railway administration, who shall scrutinize and approve by ensuring compliance to this manual.
   (b) For Mobile Flash Butte welding Plants, the procedure given in Annexure-X of this Manual shall be followed.

   The Quality Assurance Programme (QAP) shall contain the information given in Annexure-XI.

2. New Annexure VI-F, Annexure-X and Annexure-XI shall be added.

ANNEXURE-X

(Para 5.6.2)

Procedure to be followed for approval of Quality Assurance Program (QAP) for Mobile Flash Butt Welding Plants

1.0 The mobile flash butt welding plants used on railways are mostly outsourced. In order to expedite the approval of QAP and minimize the time gap between award of contract and start of work, the following procedure shall be followed.

2.0 Submission of General Quality Assurance Programme:

2.1 The general QAP, in triplicate, containing the information as per Annexure-XI of Manual shall be submitted to RDSO by agency/ Plant owner separately for each Mobile Flash Butt welding Plant proposed to be deployed. Availability of Railways' order will not be required at this stage.

2.2 The complete QAP (excluding details of welding team, details of contract agreement and standardized welding parameters) so submitted by firm will be scrutinized and approved by RDSO after ensuring compliance of relevant provisions of this manual.

2.3 One approved copy of General Quality Assurance Programme will be returned to agency, which has approached for approval.

3.0 Approval of Welding Team:

3.1 Once the contract is awarded, the firm will approach concerned Zonal railway for approval of welding team as per Para 13 of Manual.

3.2 The competency certificate to welding operators and supervisors will be issued by Chief Track Engineer of Zonal Railway after conducting necessary test as per Manual and other instructions on subject.

4.0 Submission of Final Quality Assurance Programme:

4.1 After agency has got the welding team approved by concerned Zonal Railway, the firm will undertake internal test to provisionally fix the welding parameters for rails of different sections/ metallurgy as required to be welded as per contract.

4.2 After completing above exercise, the agency will submit the final Quality Assurance Programme (Duly updating the

earlier approved General QAP with details of welding team approved by Zonal Railway with competency certificates, proposed welding parameters as decided by firm during internal test and details of contract agreement) in quadruplicate to RDSO through concerned Railway Administration for standardization of welding parameters and then approval of final QAP.

5.0 Standardization of Welding Parameters:

5.1 After final QAP submitted is found satisfactory during scrutiny, the standardization of welding parameter for concerned Rail section/ UTS as requested by agency/ zonal railway will be undertaken by RDSO as per Para 5.6 of Manual.

5.2 The standardized welding parameters will be advised to agency/ zonal Railway.

6.0 Approval of Final Quality Assurance Programme (QAP):

6.1 After standardization of welding parameters, the standardized welding Parameters will be included in final QAP submitted.

6.2 The copy of final QAP approved by RDSO duly containing the standardized welding parameters shall be issued to the concerned railway and firm for undertaking the Flash Butt welding work as per provisions of this Manual.

6.3 The adherence to provisions of Manual and QAP will be ensured by concerned Zonal Railway.

7.0 The Final Quality Assurance Programme (QAP) of a particular Mobile Flash Butt welding Plant need not be re-approved by RDSO unless there is major change in Quality Control setup or new type of rail to be welded or there is a revision/amendment to FBW Manual to provisions related to quality assessment of FB welds/procedure of welding/ methodology of standardization of welding parameters. In case of change of operator, Zonal Railways shall take action for approval of welding team and revised QAP incorporating the revised details shall be approved by Chief Track Engineers of Zonal Railways. The final decision whether there is major change in Quality Control setup or not will rest with Chief Track Engineers of Zonal Railway, where plant is being deployed.

ANNEXURE-XI

(Para 5.6.2)

Information to be provided in Quality Assurance Programme for Mobile Flash Butt Welding Plants

1. Cover page of the QAP

   This shall indicate the Name and relevant details of Agency; Details of Mobile Flash Butt Welding machine (Make, Model & Serial no.etc.); Details of Contract along with agreement no. & name of Zonal Railway awarded the Contract.
2. Index.
3. Brief description about the firm/ company and General information about the addresses and contact numbers of office and work stations, branches and sister concerns and the details of ISO certification, if firm is already a ISO certified company having Operation and maintenance of Mobile Flash Butt Welding Plant in scope. If firm is not already ISO certified, ISO certification including Operation and maintenance of Mobile Flash Butt Welding Plant in scope shall be ensured before submission of Final QAP.
4. If firm is ISO certified,
   1. Quality policy of the company as per ISO certification.
   2. Certificate to this effect that the approved QAP is a controlled document and a quality record of ISO quality control system of the vendor.
5. Organization chart emphasizing quality control set-up.
6. Qualification and experience of key personnel and officials deployed for operation and in quality control cell including supervisor and welders of the machine.

   Details of competency certificate of the welders issued by Zonal Railway as per clause 13.2 of Manual shall be specifically indicated.
7. Brief description on the Mobile Flash Butt Welding Machine and other machinery & plant deployed. (Serial no., model no., make, date of manufacturing, AMC details and brief working procedure of the machine).

   (MFBW machine must have facility for display and storage of all the welding parameters in re-producible electronic forms at the time of F.B. welding of rail joints. A certificate in this regard along with brief on the facility for display/ storage capacity of the machine must be specifically mentioned in the QAP).
8. Recommended Welding parameters for various rail sections and rail metallurgies as per operating manual of FBW machine specified by Manufacturer.
9. Process flow chart for complete process (from receipt of rail to dispatch of welded panels).
10. Procedure for Standardization of welding parameters as per clause 5.6 of manual. (The parameters finally approved by RDSO shall be included in final QAP).

11. Procedure of field approval of welding procedure as per clause 5.7 of Manual.

12. Quality Assurance System covering the following:

(a) Scope

(b) List of standards, codes and reference documents.

(c) Inspection & Testing process of incoming rails as per clause 2 to 4 of Manual.

(d) Detailed description of procedure of regular welding of rails.

(i) Welding Process and In process check:
- Inspection of Copper/ Melloroy electrodes for electrical contact.
- Rail alignment.
- Welding sequence including stripping for mobile flash butt welding plants.

(ii) Weld Record for each joint duly indicating actual weld parameters vis-à-vis parameters standardized by RDSO.

(iii) Post weld heat treatment for 110 UTS & HH rails, if applicable.

(iv) Post weld straightening.

(v) Finishing of joints to achieve geometrical standards given in Annexure IV of Manual.

(vi) Marking of joints for Mobile FBW plants. (Marking code shall be assigned by RDSO at the time of approval of final QAP).

The formats duly indicating the frequency of in process check shall be part of QAP.

(e) Product Control:

(i) Tests for every flash butt welded joint.
- Visual inspection.
- Dimensional check.
- Ultrasonic test.

(ii) Additional Tests on sample flash butt welded joint.
- Hardness test.
- Transverse Load test.
- Macro examination.
- Micro examination.

Formats as per Manual for each of the above mentioned tests shall form part of QAP.

(f) System Control as per clause 11 to 14 of Manual as under:

(i) Handling of high strength rails (90UTS HH and 110UTS), if applicable.

(ii) Periodical maintenance of mobile flash butt welding machine as per procedure and frequency laid down by OEM (Original Equipment Manufacturer).

(iii) Periodical inspection of mobile flash butt welding machine by OEM or his authorized representative at an interval of two years or execution of 20,000 joints whichever is earlier to conduct technical audit of its health, as per clause 14.1 of Manual.

(iv) Availability of sufficient stock of genuine spares.

(g) List of various gauges/ templates e.g. feeler gauge, straight edge etc. along with their calibration status and plan.

13. Quality Assurance System- Inspection & Testing covering the following:-

S. No.	Process	Sample size and frequency of inspection/testing	Parameters for inspection/tests	Method/measuring/ equipments	Accuracy	Acceptance limit/ specified value	Reference documents	Standard format no. for maintaining results	Rejection details (reprocessed/ scrapped)

14. List of tools & plants and testing equipments available with MFBW machine for execution of rail welding alongwith calibration status and plan.
15. List of Registers maintained and their standard formats with unique number.

Following registers/records are mandatory:
1. Record of Weld Register (Proforma as per Annexure –III of Manual),
2.Dimensional Check Register (Proforma as per Annexure –VIA of Manual),
3. USFD Test Register (Proforma as per Annexure – VIB of Manual),
4. Hardness Test Register (Proforma as per Annexure – VIC of Manual),
5. Transverse Load Test Register (Proforma as per Annexure – VID of Manual),
6. Macro Examination Register (Proforma as per Annexure – VIE of Manual),
7. Micro Examination Register (Proforma as per Annexure – “VI F” of Manual).
8. Daily Progress Register (Proforma as per Annexure –‘A’ attached),
9. Joint Rejection Register (Proforma as per Annexure –‘B’ attached),
10. Customer Complaint Register (Proforma as per Annexure – ‘C’ attached).

16. Welding parameters to be approved by RDSO:- A blank format as prescribed in operating manual of FBW machine shall be part of final QAP for entering the welding parameters to be standardized by RDSO.

17. The QAP covering all the information must be given in the form of single document indicating name of the firm , effective from, document no., revision number and page no. ‘x’ of ‘y’ on each page. Each page shall be signed by (with name and designation) ‘Prepared by’, ‘Checked by’ (QC in-charge) and ‘Approved by’ by competent authority. In case of General QAP, details of welding team, details of contract agreement and standardized welding parameters need not to be included.

Annexure-VI F
(Para-5.6.4.10)

Micro Examination of Welded Joints

9. Date, month and year
10. Joint No.
11. Rail section
12. Date of Testing
13. Remarks on Microstructure at 100X magnification with grain size
14. Signature
15. Summary – (at the end of the month)

No. of joints welded during the month (Rail section-wise)
No. of joints checked (Rail section-wise)
No. of joints rejected (Rail section-wise)

Annexure-'A'
(of Annexure -XI)

Daily Progress

Date	Rail Section	Joint No.		Total No. of joints welded on date	No. of Joints Tested	No. of Joints found defective with reason	Remarks	Signature
		From	To					

Summary – (at the end of the month)

No. of joints welded during the month (Rail section-wise)
No. of joints checked (Rail section-wise)
No. of joints rejected (Rail section-wise)

Annexure-'B'
(of Annexure -XI)

Joint Rejection

1. Date, month and year
2. Joint No.
3. Date of Testing of joint
4. Cause of Rejection
5. Date of Re-welding
6. Re-weld joint No.
7. Remarks
8. Signature

Annexure-'C'
(of Annexure -XI)

Customer Complaint

Sl. No.	Date	Name & Designation of the Customer	Complaint	Signature of Complainant	Corrective Action Taken by the work executing agency	Signature of work executing agency