सत्यमेव जयते

GOVERNMENT OF INDIA
MINISTRY OF RAILWAYS
(RAILWAY BOARD)

INDIAN RAILWAYS
TRACK MACHINE MANUAL

Second Edition
September, 2019

सत्यमेव जयते

GOVERNMENT OF INDIA
MINISTRY OF RAILWAYS
(RAILWAY BOARD)

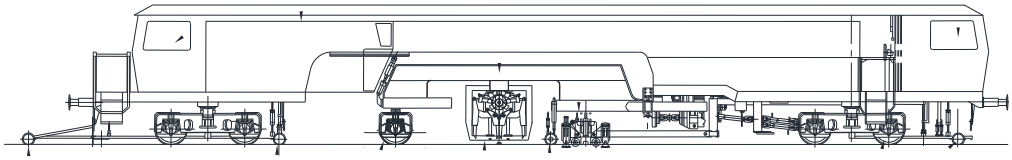

INDIAN RAILWAYS

TRACK MACHINE MANUAL

Second Edition
September, 2019

FOREWORD TO SECOND EDITION TO IRTMM (2019)

Indian Railways Track Machine Manual was first published in March, 2000. Many new types of Track Machines have since been inducted into Indian Railways which needed to be updated in the Manual. It was also being felt that some of the topics like tamping technology, technical detail of machines, maintenance infrastructure, organizational structure etc. need to be deliberated in more detail for better apprehension by field staff. Accordingly, second revision of Indian Railways Track Machine Manual has been prepared after including all types of machines working on Indian Railways, tamping technology, organizational structure of Track Machine and procedure for data entry in TMS.

I am happy to note that now Indian Railways Track Machine Manual, covering every aspect of the track machine working, is being published. It is hoped that this manual will be very useful to the officers and staff associated with track machine as well as Permanent Way maintenance.

New Delhi
September, 2019

Vishwesh Chaube
Member Engineering
Railway Board, New Delhi

FOREWORD TO FIRST EDITION TO IRTMM

Mechanized track laying and maintenance has been introduced in a big way on Indian Railways to meet the challenges of growing traffic and changed socio-economic conditions.

Based on the field experience and recommendations by the machine manufacturers, numbers of instructions have been issued from time to time by the zonal railways and Railway Board. However, these were not documented at one place.

I am happy to note that now Indian Railways Track Machine Manual, covering every aspect of the track machine working, has been published. It is hoped that this manual will be quite useful to the officers and staff associated with track machine as well as Permanent Way maintenance.

New Delhi
23rd March, 2000

V.K.Agnihotri
Member Engineering
Railway Board
New Delhi

PREFACE TO SECOND EDITION

"Indian Railways Track Machine Manual" was published in 2000 for the guidance of the officials of Track Machine and Open Line/Construction organization.

Mechanisation of track maintenance over IR stated with induction of 4 nos. of (B-60) on-track tamping machine of MATISA make during 1963. Now the fleet of track machines on Indian Railways has grown from 4 No. (B-60) on-Track Tampers to 904 (as on 01-12-2018) track machines covering almost all spheres of track maintenance and track laying/renewal activities. Railway Board appointed a committee to review and revise the Track Machine Manual – 2000 vide Letter No. 96/Track-III/TK/44 Vol. II dated 02-11-2015 based on latest developments, provisions and working rules with due consideration to provisions of IRPWM, G&SR and other codes/manuals, instructions/JPOs issues by Zonal Railways, instructions regarding operation, maintenance, troubleshooting manuals etc. of OEMs & RDSO.

Following members of committee as nominated by Railway Board either by name or by virtue of post participated during meetings and finalized the draft of this manual –

Sl. No.	Designation	Name (S/Shri)
1	Executive Director (TM), RDSO	Brijesh Kumar
		Mudit Bhatnagar
2	Senior Professor, Track, IRICEN	Chandra Shekhar Sharma
3	Chief Engineer/TM, Central Railway	Naresh Lalwani
		Pradeep Kumar Garg
4	Chief Engineer/TM, Western Railway	Vivek Kumar Gupta
5	Chief Engineer/TM, North Central Railway	C. P. Gupta
6	Chief Engineer/TM, South Central Railway	Gautam Srinivas
		Rakesh Yadav
7	Chief Engineer/TM, East Central Railway	Vijay Kumar Sahu

S/Shri Anil Choudhary/Director/TM-III/RDSO, Sanjay Asthana/Executive Engineer/NCR, Muslim Ahmed/Assistant Research Engineer/TM/RDSO and S. D. Mahajan/Assistant Engineer /TM/ Western Railway rendered the valuable assistance and contributions to committee during deliberations and preparation of this manual.

The committee also received valuable inputs and contribution from S/Sh. A.K. Khandelwal/Executive Director Track (MC)/Railway Board & Tushar Kant Pandey/Director Track (MC)/Railway Board. I hope this detailed and reviewed version of manual will be very useful for the field staff and will succeed in its purpose of disseminating the art of track maintenance using sophisticated Track machines to the field engineers.

Any comments and suggestions from the reader regarding any correction/further improvement for the manual will be highly appreciated.

Rakesh Goyal
Additional Member/Civil Engg.
Railway Board, New Delhi

New Delhi
September, 2019

PREFACE TO FIRST EDITION

Track Machines were introduced on Indian Railways during the early sixties. The use of the machines both for maintenance as well as track laying increased with the introduction of heavy track structures. For working of these machines, instructions had been issued by the Railway Board and Zonal Railways from time to time. However, no manual as such was issued on track machines. Under these circumstances, Railway Board vide their letter no.96/Track-III/TK/84 dated 11-12-96 appointed a committee for preparation of the manual, of Director/IRICEN, Executive Director (TM)/RDSO, Executive Director Track (MC)/Railway Board and Chief Track Engineers (MC) of Northern, Southern and South Central Railways. The following officers participated in the committee from time to time:-

Designation	**Name**
Director, IRICEN (Chairman)	Shri Vinod Kumar
Executive Director (TM)/RDSO	S/Shri i) A.P. Mishra ii) O.P. Agrawal iii) Dharm Singh
Executive Director Track (MC)/ Rly Board	S/Shri i) R.N. Verma ii) V. K. Agrawal
Chief Track Engineer (MC)/N.Rly	S/Shri i) S. K. Vij ii) A.P. Mishra iii) Harjinder Singh
Chief Track Engineer (MC)/S.C.Rly	S/Shri i) N. Ramasubramanian ii) P.N. Ram
Chief Track Engineer(MC)/S.Rly	S/Shri i) A.N. Parakalan ii) S.ParameshwaraIyer iii) K.J.S. Naidu

The committee held its first meeting on 10-04-97 at IRICEN/Pune. Subject matter of various chapters of the manual was discussed by the committee during subsequent sittings. Draft of the manual was finalised and circulated to Zonal Railways for suggestions, vide Railway Board's letter no. 96/Track-III/TK/44 dated 08-06-98. In the light of comments/suggestions received from the railways, original draft was finalised with modifications as considered necessary. The prevailing instructions in regard to working of track machines over different railways, instructions issued by Railway Board, provisions in the IRPWM, Indian Railway General Rules, other relevant codes/manuals and circulars issued by RDSO, had also been kept in view while preparing this manual.

While every effort has been made to cover all aspects of track machine working, the Chief Engineers of zonal railways may issue such supplementary instructions as necessary to suit local conditions on the railways. Such instructions, however, should not contravene any of the provision in this manual and other codes.

The committee was rendered valuable assistance and contributions by S/Shri C.P. Tayal, Sr. Processor/IRICEN; Hitesh Khanna, Director Track (MC)/Rly Board and J. S. Mahrok, Director/TM RDSO, during deliberation and preparation of this manual.

Though every care has been taken in preparing this manual, any error or omission, if found, may be brought to the notice of Railway Board. Suggestions for further improvement in this manual will be welcome.

This manual has been issued in consultation with Finance and Traffic Directorates of Railway Board.

New Delhi
March 10, 2000.

N. C. Bindlish
Additional Member/Civil Engg.
Railway Board, New Delhi.

CONTENTS

Para	Details	Page No
	CHAPTER 1	
	ORGANISATIONAL STRUCTURE, DUTIES AND INSPECTIONS	**1-17**
	PART A - ORGANISATIONAL STRUCTURE AND DUTIES	
101	**Track Machine Organisation – Role**	**1**
102	**Functions and Organisation**	**2**
	(1) Functions of Track Machines Organisation	
	(2) Organisation at Zonal Railway HQ	
	(3) Field Organisation on Zonal Railway	
	(4) Central Periodic Overhauling (CPOH) Workshop	
103	**Duties of Executive (XEN)/Assistant Executive Engineer (AXEN)/TM/Line**	**3**
	(1) General	
	(2) Observance of Rules and Regulations	
	(3) Inspection by Higher Officers	
104	**Duties of SSE/TM/SDI**	**5**
105	**Duties of SSE/TM(SD)**	**6**
106	**Duties of SSE/JE/TM Working on Machines**	**6**
107	**Duties of SSE/JE Machine In-Charge**	**7**
108	**Duties of SSE/JE/MCM/TMM in Control set up in HQ/ZMD/Division**	**8**
109	**Duties of Master Crafts Man (MCM) and Track Machine Maintainers (TMM)**	**8**
110	**Duties of Machine Assistant**	**8**
111	**Duties of Assistant Divisional Engineer (Open Line) ADEN**	**9**
112	**Duties of SSE/JE (P.Way) Deployed with the Machine**	**10**
	PART B – INSPECTION OF TRACK MACHINES	
113	**Inspection Schedule of Track Machine Officials**	**11**
114	**Inspection Schedule of Open Line Officials**	**11**
115	**Items to be Inspected**	**12**
	(1) Inspecting Officials of TMO as well as Open Line	
	(2) Inspecting Officials of TMO- Additional Items	
	(3) Inspecting Official of Open line - Additional Items	
	CHAPTER 2	
	TAMPING MACHINE AND DYNAMIC TRACK STABILIZER	**18-98**
201	**General**	**18**
202	**Tamping Machine**	**18**
	(1) Functions	
	(2) General Layout	
203	**Important Assemblies of Tamping Machines**	**18**
	(1) Engine	
	(2) Tamping Units	
	(3) Tamping Tool	

(4) Lifting and Lining Unit
(5) Satellite Unit
(6) Trolleys
(7) Brake System
204 Types of Tamping Machines 21
(1) Tampers without Satellite Unit
(2) Tampers with Satellite Unit
205 Tamping Mechanism 23
206 Tamping Parameters 24
(1) Squeezing Pressure
(2) Tamping Depth
(3) Tamping Tool Vibration, Amplitude & Frequency
(4) Vibration Pressure
(5) Tamping Cycle & Squeezing Time
(6) Tamping Tool Surface Area
207 Optional Equipment 27
(1) Laser Beam System
(2) Geometry Value Assessment (GVA)
(3) Automatic Guiding Computer (ALC) System
(4) Data Recording Processor (DRP) System
(5) Computerized Measuring System (CMS)
(6) Computerized Working System (CWS)
208 Lining System 28
(1) Reference Rail
(2) Lining Method
209 4 Point Lining Method 29
(1) Lining Principle
(2) Application of 4-Point Lining Method
210 Corrections to be Applied in 4 Point Lining Method 31
(1) Correction (FD)
(2) Versine Compensation (V)
211 Modes of Tamping using 4-Point Lining Method (Only for curves) 38
(1) 4-Point Smoothening or Compensation Mode
(2) 4- Point Design Lining
212 3 Point Lining Method 39
(1) Lining Principle
(2) Application of 3-Point Lining Method
213 Corrections to be applied in 3- Point Lining 40
214 Determination of Target Versine Values for the 3-Point Lining Method 41
(1) Curve with Parabolic Transitions
(2) Curve without Transition
215 Mode of Tamping using 3-Point Lining Method 45
(1) 3- Point Elementary Mode Lining
(2) 3- Point Design Mode Lining

(3) Measuring Run (with ALC) Lining Modes
216 Comparison between 3 Point and 4 Point Lining System 46
(1) 3-Point Lining elementary mode/4-point Lining Smoothening Mode
(2) 3 -Point Lining /4-point Lining in Design Mode
217 Levelling of Track 48
(1) Datum Rail and Cant Rail
(2) Selector Switch
218 Levelling and Lifting System 48
(1) Equipment
(2) Working
(3) Reduction Ratio
(4) Reduction Ratio of Various Machines
219 Mode of working for levelling 50
(1) Smoothening or Compensation Levelling Mode
(2) Design or Precision Levelling mode
(3) Measuring Run (ALC) Levelling Mode
220 General Lift 51
(1) Deciding General Lift
(2) Quantum of General Lift
(3) General Lift on Curves
221 Ramp in Ramp Out 52
(1) Value of Ramp
(2) Method of Ramping
(3) Feeding of Ramp Values
222 Input of the Lifting Values 53
(1) Method of feeding of Cant in Curves
(2) Correction (K) in Cross-Level
(3) Attention to Vertical Curve
223 Survey and working of Tamping Machines in Design Mode 57
224 Works required Before, During and After Tamping 57
(1) General
(2) Preparatory Works
(3) Pre-Tamping Works
(4) Operations During Tamping
(5) Post Tamping Operations
225 Dynamic Track Stabilizer (DTS) 63
(1) General
(2) General Layout
(3) Advantages of DTS
(4) Brake System
226 Working Principle of Dynamic Track Stabilizer 64
(1) Mechanism of DTS
(2) Levelling System in DTS
(3) Speed of Working of DTS

(4) Stabilization Achieved by DTS
227 Modes of working of Dynamic Track Stabilizer **65**
(1) Maximum Settlement/Constant Pre Load Mode
(2) Controlled Settlement/Variable Pre Load Mode
228 Types of Dynamic Track Stabilizer **65**
(1) Types of DTS
(2) Salient Features of Different DTS
229 Working of DTS **67**
(1) General
(2) Precautions in DTS Working
Annexure-2.1 : Position of Tamping Tools In Tamping Machines **70**
Annexure 2.2 : Important Features/Dimensions of DUOMATIC & WST METEX **72**
Annexure-2.3 : Important Features/Dimensions of Points & Crossing Tamping Machine **73**
Annexure- 2.4 : Important Features/Dimensions of UNIMAT Split Head MFI & Multipurpose Tamping Machine **74**
Annexure- 2.5 : Important Features/Dimensions of Continuous Tamping Machine 09-32-CSM **75**
Annexure- 2.6 : Important Features/Dimensions of Tamping Express (09-3X) (Plain Track Tampers) of Different Models **76**
Annexure- 2.7 : Laser Sighting System **77**
Annexure- 2.8 : Automatic Guiding Computer (ALC) System **79**
Annexure- 2.9 : Machine Trolley Distances **81**
Annexure- 2.10 : Sample - Versine Compensation (V) **82**
Annexure- 2.11 : Sample- F Values **83**
Annexure- 2.12 : Example- Sequence of Tamping of Track by WST 08-32C **84**
Annexure- 2.13 : Example – Ramp In and Ramp Out **88**
Annexure- 2.14 : Sample - Correction (K) for Curvature **91**
Annexure- 2.15 : Sample - Value of X for Vertical Curves **92**
Annexure- 2.16 : Guidelines for Surveying of Track for getting Offset values for Design Mode of Tamping **93**
Annexure- 2.17 : Sequence of Tamping of Different Points & Crossing (UNIMAT-2S) **96**

CHAPTER 3
BALLAST CLEANING AND HANDLING MACHINES **99-129**
301 General **99**
302 Ballast Cleaning Machines (BCM) **99**
303 Important Assemblies of Ballast Cleaning Machines **100**
(1) Engine
(2) Excavating Unit
(3) Screening Unit
(4) Conveyer System for Distribution of Ballast and Disposal of Muck

(5) Track Lifting and Slewing Unit
(6) Recording Unit
(7) Brake System
304 Types of Ballast Cleaning Machines 101
(1) Plain Track Ballast Cleaning Machine
(2) Points and Crossing Ballast Cleaning Machine
(3) Plain Track and Points & Crossing Ballast Cleaning Machine
305 Working Principle and Capability of Ballast Cleaning Machines 102
(1) Excavation Width
(2) Excavation Depth
(3) Lifting and Slewing of Track
(4) Disposal of Muck
(5) Screening Capacity of BCM
(6) Controlled Ballast Distribution
(7) Total Excavation
(8) Deep Screening of Points and Crossing
306 Works Required Before, During and After Deployment of Ballast Cleaning Machines 106
(1) Introduction of Ballast Cleaning Machines for Plain Track and Turnouts
(2) Preparatory Works
(3) Operations During Traffic Block
(4) Operations after Deployment of Machine
307 Shoulder Ballast Cleaning Machine (SBCM) 111
308 Important Assemblies of Shoulder Ballast Cleaning Machines 111
(1) Engine
(2) Excavating Unit
(3) Screening Unit
(4) Conveyor System for Distribution of Ballast and Disposal of Muck
(5) Ballast Profiling Plough
(6) Broom
(7) Brake System
309 Types of Shoulder Ballast Cleaning Machines 112
(1) Shoulder Ballast Cleaning Machine - FRM 80
(2) Shoulder Ballast Cleaning Machine - FRM 85
310 Capacity of Shoulder Ballast Cleaning Machines 112
(1) Width of Excavation
(2) Depth of Excavation
(3) Muck Disposal System
(4) Ballast Distribution System
(5) Screening Capacity
(6) Total Excavation
311 Works Required Before, During and After Deployment of Shoulder Ballast Cleaning Machines 113
(1) Operations Prior to Deployment of Machine

(2) Operations During Block
312 Ballast Regulating Machine (BRM) 114
313 Important Assemblies of Ballast Regulating Machines 114
(1) Shoulder Plough
(2) Front Plough
(3) Centre Plough
(4) Broom
(5) Hopper
(6) Rail Fastening Sweepers
(7) Welded-on-Tunnels for covering Rail and Fastenings
(8) Brake System
314 Types of BRM 115
(1) Without Hopper
(2) With Hopper
315 Working Principle and Capacity of Ballast Regulating Machines 116
(1) The Regulation Width
(2) Ballast Handling Capacity
316 Works Required Before and During Deployment of Ballast Regulating Machines 119
(1) Operations Prior to Deployment of Machine
(2) Operations During Block
Annexure-3.1 : Important Features/Dimensions of Ballast Cleaning Machine (RM-80) **121**
Annexure-3.2 : Important Features/Dimensions of Ballast Cleaning Machine (RM-76 & RM-80-92U) **122**
Annexure-3.3 : Important Features/Dimensions of Shoulder Ballast Cleaning Machine (FRM-80) **123**
Annexure-3.4 : Important Features/Dimensions of Shoulder Ballast Cleaning Machine (FRM-85 F) **124**
Annexure-3.5 : Important Features/Dimensions of Ballast Regulating Machine (Model - 56-3 & 66-4) **125**
Annexure-3.6 : Important Features/Dimensions of Ballast Regulating Machine (Model BRM PBR 400R) **126**
Annexure-3.7 : Important Features/Dimensions of Ballast Regulating Machine (GEMAC) **127**
Annexure-3.8 : Important Features/Dimensions of Ballast Regulating Machine (BRM 2000 SWS) **128**
Annexure-3.9 : Important Features/Dimensions of Ballast Regulating Machine (BRM METEX) **129**

CHAPTER 4
TRACK RELAYING MACHINES 130-154
401 Track Relaying Machines 130
402 Planning for Working of Track Relaying Machines 130

403 Track Laying Equipment (TLE) 130
404 Important Assemblies of Track Laying Equipment (TLE) 130
(1) Side Frames
(2) Bridge
(3) Sleeper Gripper
(4) Rail Clamps
(5) Turn Table
405 Types of Track Laying Equipment 131
406 Working Mechanism and Capability of Track Laying Equipment 131
407 Setting-up of TLE Base Depot 133
408 Pre-Relaying Operations 136
(1) At Base Depot
(2) At Work-Site
409 Operation During Block 138
410 Post Relaying Operations 139
411 Track Relaying Train (TRT) 139
(1) Functions of TRT
(2) Works by TRT
(3) Advantages of TRT
(4) General Layout
412 Important Units of TRT- Model No. P 811-S 140
(1) Beam Car
(2) Handling Car
(3) Power Car
413 Working Mechanism of TRT 140
414 Operations Prior to Deployment of TRT 142
415 Operations During The Block of TRT 144
416 Post Block Operations for TRT 144
417 Precautions During TRT Working 145
418 Points and Crossing Laying/Changing Machine (PCCM) 145
419 Important Units of AMECA T-28 145
(1) Portal Crane
(2) Trolleys
(3) Jib Crane
420 Working Mechanism and Capability of AMECA T- 28 147
(1) Longitudinal/Forward Launching
(2) Transverse/Side Launching
421 Pre-Block Operations of T-28 M/c 149
422 Operations During Block of T-28 M/c 150
423 Post Block Operations of T-28 M/c 151
424 Miscellaneous 151
Annexure- 4.1 : Important Features/Dimensions of Track Relaying Machine **152**
Annexure- 4.2 : Important Features/Dimensions of Track Relaying Train **153**

Annexure -4.3 : Important Features/Dimensions of Points & Crossing Changing Machine (AMECA T-28) **154**

CHAPTER 5
SPECIAL PURPOSE MACHINES **155-183**

501 Rail Grinding Machine (RGM) **155**
(1) Purpose of Rail Grinding
(2) Advantages of Rail Grinding

502 Important Assemblies of RGM **156**
(1) Components of RGM
(2) Front Control Car (FCC)
(3) Grind Car
(4) Water Tank Wagon
(5) Camp Coach Cum Rear Control Car (RCC)
(6) Rail Corrugation Analyzer (RCA)
(7) Obstacle Detection System
(8) Rail Profile Measurement System (Optical)
(9) Dust Collection System
(10) Brake System

503 Grinding Strategy **159**
(1) Strategy
(2) Corrective Grinding
(3) Preventive Grinding
(4) Preventive-Gradual Grinding
(5) Target Rail Profiles
(6) Patterns
(7) Grind Data Management System (GDMS)
(8) Grind Quality Index (GQI)

504 Capability of RGM **161**

505 Working Parameters of RGM **162**
(1) General
(2) Target Profile
(3) Rail Wheel Contact Points
(4) Selection of Target Profile
(5) Grind Patterns
(6) Grind Cycle

506 Monitoring Equipment for Grind Quality **164**
(1) MINIPROF
(2) Bar Gauge
(3) Star Gauge
(4) Digital Inclinometer
(5) Surface Roughness Measuring Gauge
(6) Rail Hardness

507 Working of RGM **165**

508 Quality Inspection of Grinding **165**
(1) Test Site Monitoring
(2) Other Quality Checks
509 Preparatory Works for Introduction of RGM **167**
510 Pre-Block Activity Before Deploying RGM **168**
511 Operation During RGM Block **168**
(1) On the Track
(2) On the Machine
512 Post Grinding Operation **170**
513 Utility Track Vehicle **170**
(1) General
(2) Main Assemblies of UTV and their Functions
(3) Models of UTVs
514 Rail Borne Maintenance Vehicle **172**
(1) General
(2) Main Assemblies of RBMV and their Functions
(3) Salient Features of RBMV
515 Works Required Before, During and After Deployment of UTVs and RBMV's **173**
Annexure-5.1 : Important Features/Dimensions of RGI Control Car **175**
Annexure-5.2 : Pattern Sheet **176**
Annexure-5.3 : Proforma for Data to be Fed in GDMS **177**
Annexure-5.4 : Rail Grinding Monitoring Proforma **179**
Annexure-5.5 : Important Features/Dimensions of Utility Track Vehicle & Rail Borne Maintenance Vehicle **183**

CHAPTER 6
PLANNING AND DEPLOYMENT **184-190**
601 Planning **184**
602 Pre-requisites for Deployment of Track Machines on Construction Projects/Other Agencies **185**
603 Inter- Railways Deployment **186**
604 Line Blocks, Stipulated Corridors and Monitoring **187**
605 Types of Blocks **187**
(1) Regular Traffic Blocks
(2) Blocks on Construction Projects and Multiple Lines
(3) Special Blocks
606 Minimum Duration of Blocks **188**
607 Measures for Ensuring Block **189**
608 Through Tamping and Spot Attention **189**
(1) Types of Tamping
(2) Tamping Frequency

CHAPTER 7

RULES FOR MOVEMENT AND BLOCK WORKING **191-232**

701 General **191**

(1) Categorization of Track Machines
(2) Self-Propelled Track Machines
(3) Provision of G&SR
(4) Knowledge of G&SR
(5) Manning of Track Machines and Possession of Safety Equipment
(6) Salient information of Track Machine

702 Operation and Working of Track Machine **192**

(1) Responsibility of Track Machines
(2) Supervision of work of Track Machines
(3) Working – General

703 Competencies of Track Machine Staff **194**

(1) Medical Fitness and PME
(2) Technical Training
(3) G & SR Training
(4) Route/Road Learning
(5) Competency Certificate

704 Safety Equipment **195**

(1) General
(2) Head and Tail Lights

705 Rules for Operation – General **196**

(1) Stabling of Track Machines
(2) Shunting of Track Machines
(3) Machine Ready Memo
(4) Movement of Track Machines
(5) Working in Group
(6) Run Through Movement in Group
(7) Working of Track Machine in Block
(8) Working in Automatic Block Sections
(9) Working in Integrated Traffic Blocks
(10) Use of Cell Phone on Track Machine
(11) Requirement of Pilot
(12) SSE/JE(P.way) as Guard

706 Working Of Track Machines In Single and Double Line Sections **198**

(1) Single Line Section – Work and Proceed
(2) Single Line Section – Work and Return
(3) Double Line Section – Work and Proceed
(4) Double Line Section - Work and Return

707 Important Instructions and Precautions **201**

(1) Protection of Work Site
(2) Fouling of Adjacent Lines
(3) Information to Level Crossings

(4) Safe Distance and Speed of Machine in Group
(5) Setting of Points of Stabling Siding
(6) Shunting in Line occupied by Track Machine
(7) Safety of Men
(8) Checking Infringement After Work

708 Failure and Accidents of Track Machines 203
(1) Protection in case of Breakdown
(2) Failures in Block Section
(3) Accidents involving Track Machine
(4) Action in case of Failure in Block
(5) Request for ART/Breakdown

709 Permissible Speed 204

710 Speed Certification for Track Machines 204
(1) Speed Certification for New type of Track Machine for Regular Movement
(2) Sanction for running of Machine by other Zonal Railways
(3) One Time Movement of New Machine

711 Infringements 209

712 Special Precautions while working in Special Circumstances 210
(1) Working of Machines in Ghat Sections
(2) Night Working

Annexure- 7.1 : List of Standard Forms **212**
Annexure- 7.2 : Personal Diary **214**
Annexure -7.3 : Competency Certificate **219**
Annexure- 7.4 : Proforma of Machine Ready Memo **220**
Annexure -7.5 : Proforma of Block Permit **221**
Annexure -7.6 : Instructions for Machine Working in Automatic Signalling Section **222**
Annexure -7.7 : Infringement to Indian Railways Schedule of Dimension by Various Track Machines **225**

CHAPTER 8
PERIODICAL MAINTENANCE AND ASSOCIATED INFRASTRUCTURAL FACILITY 233-275

801 General 233

802 Maintenance Schedule for Track Machines 233
(1) Maintenance Schedule for Various Track Machine
(2) Inspection of Wheel and Axle of On-Track Machine

803 Types of Workshops 235

804 Central Periodical Overhauling Workshop (CPOH) 236
(1) Functions of CPOH
(2) POH Planning for Track Machines to be Attended
(3) POH Execution
(4) Dispatch of Machine after POH

805 Intermediate Overhauling Workshop (IOH)/Zonal Machine Depot (ZMD) 238
(1) Functions of ZMD

(2) Facilities at ZMD
(3) Programme of IOH & POH
(4) Planning of IOH

806 Satellite Depot **240**
(1) Functions of Satellite Depot
(2) Facilities at Satellite Depot

807 Mobile Workshop-cum-Transport Van **240**
(1) Functions of Mobile Workshop
(2) Facilities in Mobile Workshop

808 Camping Coach Workshop **240**
(1) Functions of Camping Coach Workshop
(2) Facilities in Camping Coach Workshop

809 Infrastructure Facility for Operation and Maintenance of Track Machines **241**
(1) Infrastructural Facilities for CPOH, ZMD and Satellite Depot
(2) Storage and Carriage Facilities for Fuel and Oil
(3) Transportation of Spare Parts & Assemblies
(4) Communication Facilities
(5) Repairs and Stabling Facilities for Machines
(6) Resting & Cooking Facilities for Staff

810 Camp Coach Facilities **242**
(1) Living Area
(2) Kitchen
(3) Bathing Area & Toilet
(4) Electrification Plan
(5) Store Management

Annexure- 8.1	:	Maintenance Schedule of Track machines	**245**
Annexure -8.2	:	Formats for POH Planning	**240**
Annexure -8.3	:	POH Flow Chart	**247**
Annexure -8.4	:	Requirement of Facilities in Various Depots	**248**
Annexure -8.5	:	Machine wise list of 'Masters' required for Calibration of Parameters	**257**
Annexure -8.6	:	Format for Master Calibration	**261**
Annexure -8.7	:	Format for Repair Summary Sheet for POH	**262**
Annexure -8.8	:	Format for 90 Days Feedback of POH	**263**
Annexure -8.9	:	Typical Facilities to be provide in a Mobile Workshop	**265**
Annexure -8.10	:	List of Equipment to be kept in Camp Coach Workshop	**266**
Annexure -8.11	:	Typical Layout of Track Machine Siding	**267**
Annexure -8.12	:	Rest House for Track Machine Staff	**268**
Annexure -8.13	:	Layout of Camping Coach (Based on RDSO Drg. No.CSC-1592)	**269**
Annexure -8.14	:	Layout of Camping Coach (Based on RDSO Drg. No.CSC-1640)	**270**
Annexure -8.15	:	Layout of Camping Coach (Based on RDSO Drg. No.CSC-1686)	**271**

Annexure -8.16 : Amenities to be provided in Camping Coaches **272**
Annexure -8.17 : Paint Scheme for Camping Coach **274**
Annexure -8.18 Electric Circuit Diagram of Camping Coach **275**

CHAPTER 9
MANPOWER **276-285**
901 General **276**
902 Requirement of Manpower **276**
903 Training **276**
(1) Officers
(2) SSEs/JEs/TM(s)
(3) Technical Staff
(4) Machine Assistant
904 Roster **277**
(1) Weekly Roster
(2) Three Weeks Roster
(3) Duty Hours for Field
(4) Duty Hours for Zonal Depot and Satellite Depot
(5) Duty Hours for HQ Office & Control
Annexure- 9.1 : Weightage Factors for Track Machines and Yardsticks for staff **279**
Annexure-9.2 : Scale of Staff for Repairs and Maintenance for POH - CPOH Workshop **283**
Annexure-9.3 : Man Power for POH of 24 Track Machine Units and 200 Tamping Banks **284**
Annexure-9.4 : Man Power for POH of 50 Track Machine Units and 200 Tamping Banks **285**

CHAPTER 10
STORES AND CONTRACTS **286-294**
1001 Store Depot **286**
1002 Inventory Control **286**
1003 Procurement of Consumables, Components and Spares **288**
1004 Sourcing of Components & Spares and Procurement Procedure **288**
1005 Inspection and Acceptance of Materials **290**
1006 Modes of Procurement, Repairs and Maintenance **290**
(1) Cash Imprest
(2) Emergency Repairs/Purchase
(3) Annual Maintenance Contract (AMCs)
(4) Contracts other than AMCs
1007 Condemnation of Track Machine **291**
1008 Codal Life of Machines And POH/IOH Frequencies **291**
1009 Calculation of Unit Cost of Working of Different Track Machines **292**
(1) Capital Recovery Factor

(2) Codal Life of Machines
(3) Proportional POH and IOH Cost
(4) Fixed and Variable Cost
(5) Working and Approval of Unit Cost

CHAPTER 11
MONITORING **295-311**

1101 GENERAL **295**
(1) Data Collection & Entry
(2) Generation of Reports and Alerts
(3) Periodical Meetings

1102 Organization for Monitoring **298**
(1) Track Machine Control at Headquarters
(2) Track Machine Control at Zonal Maintenance Depot (ZMD) Level
(3) Divisional Control
(4) Satellite Depot (SD)

1103 Functions of Divisional Control in respect of Track Machines **299**

1104 Functions of Track Machine Control at ZMD Level **299**

1105 Functions of Track Machine Control at Headquarter Level **300**

1106 Monitoring Modules of Track Machines **301**
(1) Parameters for Monitoring Productivity and Utilization of Machines
(2) Parameters for Monitoring Health of Machine

1107 Reports and Documentation for Track Machines **303**
(1) Daily Performance Report
(2) Daily Log
(3) Breakdown Report
(4) Monthly Appreciation Report
(5) Monthly Summary
(6) Record for 3 years

1108 Track Management System (TMS) – Present Module **304**

Annexure-11.1 : Track Machines Organization **306**
Annexure-11.2 : Breakdown Report of Track Machine **309**
Annexure-11.3 : Types of Reports in TMS **310**

LIST OF ABBREVIATIONS **312-316**

CHAPTER 1

ORGANISATIONAL STRUCTURE, DUTIES AND INSPECTIONS

PART A - ORGANISATIONAL STRUCTURE AND DUTIES

101 Track Machine Organisation – Role

(1) Track Machine Organisation on Zonal Railway will be the custodian of on-track machines and will be responsible for making the machines available as per the approved deployment programme with requisite staff for efficient working of the machines. Each zone shall have at least one zonal maintenance depot and each division shall have at least one satellite depot for overhauling, repair & maintenance of machines.

(2) Track Machine Organization will maintain machines in good condition. The periodical schedules for maintenance of the machines shall be drawn out and the divisions will be advised of the same in advance. IOH and POH should be catered for and shown in the annual deployment programme. Scheduled maintenance activities could be combined with breakdown repairs wherever possible instead of idling the machine exclusively for such activities.

(3) Track Machine Organisation will monitor the output of machines for quality and performance with respect to blocks given.

(4) Track Machine Organization shall strive for development of its officials and staff to be technically sound, professionally competent, medically fit and safety conscious. All efforts shall be made to impart necessary training – technical as well as G&SR, road learning etc. timely and effectively.

(5) Before giving the machine ready for block working, after daily schedule, the machine shall be checked as per stipulations of OEM's manuals/RDSO instructions for ensuring trouble-free working.

(6) Immediately after major schedules/repairs of the machine, performance of machine shall be closely monitored for the first few blocks.

(7) In the event of breakdowns of machine in block, immediate action should be taken to rectify the defect. In case it is not possible to rectify the defect in the block, all efforts should be made to clear the block section as early as possible to avoid detention to trains.

(8) Efforts shall be made to rush spares, staff and other assistance to site for immediate repairing of the machine. Division shall provide necessary assistance like transport of spares, welding equipment, gas cutting equipment, manpower etc. and assist in expediting the repairs. The objective is to reduce down time to minimum.

(9) In case, it is necessary to bring the machine to satellite depot, division should ensure its expeditious movement to and from the depot. Decision on whether the

machine has to be brought to the depot for repairs shall be taken by Dy.CE/TM (line) considering relevant factors.

(10) The track machines shall be worked as per divisionalised system of working with division managing all day to day affairs including fixation of roaster, minor repairs, arrangement of consumables, staff matters and ensuring suitable working conditions for track machine staff. There may be some variations among the zonal railways.

(11) It shall be endeavour of Track Machine Organisation to utilize IT based applications to improve management of information of track machines. Modules for the same shall be provided in TMS to aim for paperless working.

102 Functions and Organisation

(1) **Functions of Track Machines Organisation -**Track Machine Organisation (TMO) shall be under the overall charge of Chief Engineer/Track Machines (CE/TM) of the Zonal Railway. TMO shall be responsible for the following functions:

(a) Manpower planning including training and development.

(b) Planning, and deployment of track machines.

(c) Operation and monitoring of track machines.

(d) Repair and maintenance of track machines.

(2) Organisation at Zonal Railway HQ

(a) CE/TM shall be assisted by one or more Deputy Chief Engineer(s) at HQ ,

(b) Deputy Chief Engineer/TM/HQ in Headquarter shall be responsible for deployment of machines, finalization of AMCs, planned procurement of spares and consumables, co-ordination with division etc. He shall be assisted by XEN/AXEN/TM/HQ(s) and SSE/JE/TM/HQ(s) working in HQ office and HQ control.

(3) Field Organisation on Zonal Railway

(a) Deputy Chief Engineer/TM/Line, posted in Zonal Maintenance Depot, shall be responsible for operation and maintenance of machines including emergency repairs and procurement. He will ensure proper deployment of staff, initiation of proposal for AMC as well as that of procurement of spares and consumables. The maintenance workshops in Zone i.e. Zonal Maintenance Depots (ZMD) and Satellite Depots (SD) in the divisions shall also be under his control. He shall be assisted by XEN/AXEN/TM/D for ZMD and XEN/AXEN/TM/Line for Satellite Depots and for monitoring of machines in field. He shall also have a 24x7 control set up in ZMD office.

(b) XEN/AXEN/TM/D shall be assisted by SSE/JE/TM/D(s). One of the SSE/TM/D shall be nominated as Depot in-charge called SSE/TM/DI, who in turn, shall be assisted by other SSE/JE/TM/D(s), MCMs, Track Machine Maintainers (TMMs) and Machine Assistants.

(c) XEN/AXEN/TM/Line will be assisted by SSE/TM /SDI who shall be in-charge of Satellite Depot and fleet of designated machines. He shall be assisted by SSE/JE/TM/SD, SSE/JE/TM(s) working on the Track Machines, MCMs, TMMs and Machine Assistants. SSE/JE/TM/SD can also be made in-charge of fleet of designated machines and will be assisted by SSE/JE/TM(s) working on the track machines, MCMs and TMMs and Machine Assistants.

(d) Each machine will be manned by one or more SSE/JE/TM as per the yardsticks, of which one will be machine in-charge assisted by other SSE/JE/TM(s), MCMs, TMMs and Machine Assistants.

(4) Central Periodic Overhauling (CPOH) Workshop

(a) CPOH workshops will be setup on Indian Railways for carrying out Periodic Overhauling (POH) of Track Machines. These will function under CE/TM of the respective railway.

(b) Deputy Chief Engineer/TM/CPOH shall be in charge of CPOH workshop and will be responsible for periodic overhauling of machines. He shall be assisted by XEN/AXEN/TM/CPOH(s) and SSE/JE/TM/CPOH(s), TMMs and Machine Assistants.

103 Duties of Executive (XEN)/Assistant Executive Engineer (AXEN)/TM/Line

(1) General – He shall be responsible for operation and maintenance of all the track machines in his charge. He shall perform following duties:

(a) Inspection and maintenance of all machines to ensure these being in a satisfactory, efficient and effective working condition. For this he shall ensure availability of tools & gadgets for inspection of the machines.

(b) Ensure adherence to stipulated maintenance schedules.

(c) Ensure availability of necessary staff, consumables and spares of fast wearing components and unit replacement assemblies etc. for the operation and optimum utilisation of machines.

(d) Ensure achievement of stipulated targets in respect of both the quantity and quality of output.

(e) Breakdown repairs shall be organised by him so as to ensure that idle time of machine is minimum.

(f) Initiate proposals and plan for major schedules, ensure their execution and submit completion reports for all such works. He shall personally supervise important schedules and major repairs.

(g) Ensure co-ordination with other units of Engineering Department as well as those of other departments as necessary.

(h) Verification of stores held by the field units, once a year. He should ensure that scrap~~s~~ and obsolete stores are returned to the zonal depot or disposed off.

(i) Ensure maintenance of various records and submission of various returns pertaining to machines from the field units.

(j) Satellite depot in the division will be under his control through SSE/JE/TM/SDI.

(k) **Training of Probationers** – The Assistant/Executive Engineer shall take interest in training of all probationers sent to him and see that training is given according to the specified programme. He should periodically examine the notes made by them.

(l) **Staff Matters** –He shall ensure that

(i) Strict discipline is maintained within the framework of the rules.

(ii) Service and leave records are maintained correctly and up-to-date. He will ensure this by sample checks.

(iii) Appeals and representations are dealt with promptly and welfare of staff looked after.

(iv) Assist Dy.CE/TM(Line) in selections for various skilled and semi-skilled posts so that the same are held in time and the posts are promptly filled up.

(v) All the SSE/JEs and other staff working under him possess necessary medical, competency and other certificates, receive route learning and proper training in maintenance practices, safety and protection rules.

(m) Ensure adoption of safe operation and maintenance practices and check availability and functioning of safety devices provided on the machines.

(n) Ensure proper operation of Service Agreements in force.

(o) Counselling of machine staff for immediate action to be taken in case of failure.

(2) **Observance of rules and regulations -** He shall ensure observance of rules, regulations and procedures laid down in this Manual, G&S Rules, IRPW Manual, Engineering Code and other departmental codes, extant orders and circulars issued from time to time. He shall ensure that the staff under him possess these codes and manuals and are acquainted with the relevant rules of operation and maintenance procedures & stipulations connected with their duties and they perform duties, accordingly.

(3) **Inspection by higher officers -** He shall accompany the higher officers during their inspections. Following records shall be made available by him during inspections:

(a) History book of the machine, engine and major unit assemblies.

(b) Failure registers.

(c) Progress bar charts and analysis.

(d) Unit cost statement.

(e) Maintenance schedule register.

(f) Inspection notes of higher officers and compliance report.

(g) Operation and maintenance instructions of the machines issued by OEM/RDSO.

(h) Programme of deployment of machines.

(i) Track Machine Manual and G&S Rules.

(j) Record of the training given to supervisors and their competency certificates, road learning and medical certificates.

(k) Scale and Position of critical spares and consumables.

(l) Inspection checklist and maintenance schedule instruction issued by OEM/RDSO.

104 Duties of Senior Section Engineer/TM/SDI

(1) SSE/TM (SDI) shall be responsible for the satisfactory operation, maintenance and productivity of the fleet of machines under his charge and quality of work performed. He shall inspect the machine(s) under his charge, as per laid down schedule and take remedial measures wherever required within reasonable time. He shall submit the report of inspection to his next higher authority. He shall be able to work/operate the machine(s) under his charge when needed and shall be in possession of valid competency certificate, road learning and medical certificate. He shall also ensure that the SSE/JE/TM working under him in the depot and on the track machines have valid competency certificates, road learning and medical certificates etc.

(2) He shall be well acquainted with the working systems, operating instructions, maintenance schedules, specifications of the oils & lubricants to be used, critical components etc. of machine(s) under his charge. He shall have thorough knowledge of the manuals supplied by the manufacturers of the machines and associated instructions issued by RDSO.

(3) He shall have thorough knowledge of the rules and regulations and procedures concerning his work and duties as laid down in this Manual, G&S Rules, IRPWM, Engineering Code and other departmental codes, extant orders and circulars issued from time to time. He shall guide all the staff working under him in faultless operation and efficient maintenance practices pertaining to the machines in his overall charge and educate them in rules and regulations. He shall ensure that the staff perform their duties efficiently.

(4) He shall have in his possession up-to-date copies of the rule books/documents/manuals pertaining to the safe, efficient and trouble-free working of the machines and also other codes and books applicable and needed for the day-to-day working.

(5) He shall maintain the records in the depot, pertaining to the machines under his charge and submit the prescribed returns regularly. He shall periodically verify the physical condition and quantities of stock in his charge and arrange to submit

periodical returns/requisitions of Tools & Plant, spares, consumables and other stores, carry out verification of all stores including spares held by him, assist in stock verification by Stock Verifiers, and ensure compliance of Account/Audit Reports etc.

(6) He shall ensure discipline of the staff working under him within the framework of rules and endeavour to keep their moral high and look after their welfare.

(7) He shall ensure proper handing over/taking over of the charge when transfer/change of portfolio is affected.

(8) He shall plan and ensure timely execution of the maintenance schedules of the machines within the specified time.

(9) He shall keep himself abreast of the various methods and techniques of reconditioning of components and availability status of spares at the Zonal Maintenance Depot for efficient re-commissioning of the machine during breakdowns. He shall render technical assistance to the higher authorities in developmental activities/import substitution and indigenisation activities.

(10) He shall investigate major failures of the machine critically for corrective actions/remedial measures and also for fixing responsibilities in case of failures occurring due to lapses of staff. He shall obtain the first information reports during breakdowns, inspect the machines and take action for expeditious repairs.

(11) He shall be conversant with the provisions in various Service Agreements/Contracts and organise the visits of Service Engineers (scheduled or break down). Effective utilisation of expert advice and follow-up action on "Service Report Observations" shall form part of his duties.

105 Duties of SSE/TM/SD - Where SSE/TM/SD is available in addition to SSE/TM/SDI depending upon the machine units attached to satellite depot, he will carry out all the duties assigned to SSE/TM/SDI for the fleet of machines assigned to him except those related to stores. He shall follow the instructions of SSE/TM/SDI for improving effective utilization of machines and such other duties assigned to him.

106 Duties of SSE/JE/TM working on machines - Each machine shall be worked under the direct charge of SSE/JE/TM during the movement and working of track machine. He shall be in possession of the valid competency certificate, road learning and medical fitness certificate for working the machine. He shall perform the following duties:

(1) Operate the machine following the instructions issued by RDSO/OEM including calculation and input of data as required.

(2) Carrying out pre-block maintenance daily as per schedule, other maintenance schedules, and making the machine fit for working and give machine ready memo to SSE/JE/P.way or station master.

(3) Ensure proper functioning of all the systems and components and keeping a watch on the controls/indicators/gauges.

(4) Initial setting out for the block working and closing the work of the machine.

(5) Taking precautions for Design Mode operations such as slewing, lifting etc. in case of tamping machines.

(6) Deploying of MCMs, TMMs and Machine Assistants at respective places around the machine for monitoring the work of various systems, maintenance activities during block and also to attract attention of the SSE/JE/TM working in operating cabin and assist him in the event of malfunctioning of the machine or obstructions in track.

(7) He shall ensure safety of staff working around the machine.

(8) Participate in IOH and POH activities of the machine as required.

(9) Assist SSE/JE/TM (in-charge) on the machine in all aspects of machine working and maintenance within his competency.

107 Duties of SSE/JE/Machine In-Charge - One of the SSE/JE/TM on the machine, shall be nominated as the machine-in-charge i.e. SSE/JE/TM/I. In addition to his normal work as detailed in Para 106 above, he shall be responsible for the following functions in which he will be assisted by all the staff posted on the machine:

(1) Carrying out the prescribed schedule of maintenance and keeping proper records of the same.

(2) Safe custody, accountal and replacement of the spares, Tools & Plants and consumables issued for the machine and returning of released spares to zonal depot for reclamation/condemnation.

(3) Keeping systems of the machine in working condition and ensuring the target output, duly maintaining quality.

(4) Maintaining log books and other records, sending daily and other periodical reports/statements using appropriate fastest mode of communication.

(5) Liaison with the divisional officials and Engineering control for efficient working of his machine, co-ordination with the permanent way staff and planning daily programme of machine work and interacting with the permanent way staff for working e.g. working in design mode for slewing and lifting of track etc.

(6) Actively associating during visit of firm's Service Engineer, furnishing of such information as may be needed for proper examination of the machine and taking necessary follow up action.

(7) Furnishing necessary reports to and keeping SSE/TM/SDI or SD informed as the case may be, about all the relevant aspects of the machines as also other records and details as asked by him and carry out necessary actions as directed for proper operation and maintenance of his machine.

(8) In the event of breakdown of the machine, he will be responsible for setting right the defect in shortest possible time with the help of machine and other staff. In

case the machine cannot be repaired in the block, he shall be responsible for winding up using all resources including back-up systems and clear the block section as early as possible. He shall be assisted by SSE/JE/P.Way and demand the engine/breakdown train through SSE/JE/P.Way, if required, without undue delay.

108 Duties of SSE/JE/MCM/TMM in Control Set Up in HQ/ZMD/Division - The duties of the above staff in control offices are as given in Chapter 11.

109 Duties of Master Crafts Man (MCM) and Track Machine Maintainers (TMM) - MCMs and TMMs attached with the machine(s) shall assist the SSE/JE/TM in operation and maintenance of track machines. Their main functions are:

(1) To attend to the daily and weekly maintenance schedules of machine and record the compliance in log book. To attend and assist service checks by the service engineers.

(2) To attend to breakdown and repairs of machines in block with due urgency.

(3) To keep in his custody the various tools, plants and equipment necessary to attend repairs and ensure their working condition.

(4) To attend to the repairs and maintenance of machines including during IOH and POH.

(5) To guide and supervise the machine assistants and other staff in attending to the maintenance/repairs.

(6) To remain vigilant during movement and working of machine and to inform the concerned SSE/JE/TM of any abnormalities.

(7) To ensure safety of the machine and staff working at machine site.

(8) Accompany the machines during shifting as directed, especially T-28 machine and PQRS portals.

(9) Any other work assigned to him by the SSE/JE/TM.

(10) MCMs and TMMs posted in depots and work areas other than machines will perform duties assigned by their controlling officials.

110 Duties of Machine Assistant - He shall assist SSE/JE/TMs and TMMs in performing their functions and their main duties would be as below:

(1) To keep the machine in neat and clean condition.

(2) To replace spares like tamping tools as directed by SSE/JE/TM or TMMs.

(3) To recoup HSD oil as required.

(4) To assist TMM for carrying out daily and other specified schedule maintenance of track machine including that for IOH and POH.

(5) Transportation of material, spares and consumables from depot to machine and vice versa.

(6) To bring all necessary tools and plants from coach to machine or otherwise as specified by TMM or machine-in-charge.

(7) To be vigilant during machine working and promptly inform machine-in-charge regarding any obstruction in track viz. SEJ, Level Crossing, Bridge, joggled fish plates etc. boulders, rail pegs etc. so as to enable SSE/JE/TM to take necessary preventive action.

(8) To warn for any abnormal sound, bursting of hose, breakage of any assembly etc. to machine-in-charge.

(9) To assist machine-in-charge in attending the failure in shortest possible time.

(10) Extend help during service check by service engineer.

(11) Ensure safety of self and colleagues during block.

(12) Perform duty of watchman for machine and coach, if required.

(13) Accompany the machines during shifting as directed, especially T-28 machine and PQRS portals.

(14) At the end of the day, facilitate safe/proper stabling of machine in siding.

(15) Any other duties assigned by TMO officers or SSE/JE/TM or TMM.

(16) Machine assistants posted in depots and work areas other than machines will perform duties assigned by their controlling officials.

111 Duties of Assistant Divisional Engineer (Open Line) ADEN - He shall perform following duties regarding track machines working in his section:

(1) He shall ensure that the pre-requisites for introduction of various track machines as specified in this manual are complied with, well in advance of deployment of the machine(s).

(2) In the stretches where the requirement of tamping is more than the normal tamping cycle, the cause should be analysed and suitable remedial action taken to restore the normal cycle.

(3) He shall make arrangements for pre-block, during block and post block activities.

(4) He shall ensure that machines are utilised in continuous stretches as per planned programme avoiding frequent shifting of the machines.

(5) He shall ensure suitable accommodation for machine staff as required with the facility of water supply, power supply and resting arrangements.

(6) He shall periodically inspect track machines working in his jurisdiction as per specified schedule.

(7) He shall arrange HSD for machines including transportation of consumables, spares etc. required by the machines from the depot to site of work.

(8) He shall ensure adequate lighting arrangements when night working of machines is involved.

(9) He shall monitor the output and quality of work done by the machines.

(10) He shall co-ordinate with other departments like Traffic, OHE and S&T in the field to facilitate machine working.

(11) In the eventuality of breakdown of machine, he shall take all possible actions to clear the block section expeditiously, once it is known that machine cannot be repaired in the block.

112 Duties of SSE/JE/P.Way Deployed with the Machine - He shall be the in-charge of the supervision of the work of track machine. He shall perform following duties:

(1) He shall ensure that the pre-requisites for introduction of various track machines as specified in IRTMM are complied with, well in advance of deployment of the machine like collection of site details and computation of values to be fed for design mode of working.

(2) He shall be responsible for pre-block operations, block operations (other than machine operation) and post block operations as detailed for various machines.

(3) During working of track machines, he shall check the track parameters and condition of track, attending to any shortcomings, ensuring that the track parameters are well within the tolerances. He shall also ensure that track is free of obstructions and infringements for safe passage of traffic before clearing the line block. As required or stipulated he shall allow traffic at suitable speed restriction based on the condition of track after machine working. He shall be responsible for issue of all necessary caution orders for machine working.

(4) Transportation of tamping tools to be reconditioned and bringing back reconditioned tamping tools will be his responsibility. Similarly, he will be responsible for temporary storage and timely arrangement and transportation of diesel oil, lube oil, hydraulic oil and other consumables from the depots to various machines working in his jurisdiction.

(5) In case the quality of work done by the machine is not satisfactory, he shall investigate and take suitable remedial measures in coordination with SSE/JE/TM.

(6) He is responsible for protection of the site of work and adjoining track wherever necessary. He will be responsible for arranging adequate precautionary measures for the safety of staff working with machine in the block section against danger of trains on the adjoining line(s). He shall arrange for track protection and provide look out men for safety at site.

(7) He is responsible to ensure that the machine(s) are stabled in suitable sidings and at such stations as to minimise idle run of the machines as well as wastage of block hours in entering and clearing of the block section.

(8) He shall provide all assistance to SSE/JE/TM for repairing of machine and winding up for expeditious clearing of the block section in case of failure of the track machines in mid-section, duly calling for necessary assistance of light engine, breakdown special etc. as necessary.

(9) He shall arrange for protecting and watching of stabled machines and he shall also ensure that no sick vehicles etc. are pushed into the same siding affecting the taking out of the machines to avail blocks.

(10) He shall co-ordinate with other departments like Traffic, OHE and S&T in the field to facilitate working.

PART B – INSPECTION OF TRACK MACHINES

113 Inspection Schedule of Track Machine Officials - Track machines shall be inspected as per prescribed schedule in accordance with detailed checklist of individual machines issued by RDSO. Periodicity of inspection for officers and supervisors of track machine shall be as given below:

(1) Inspection by Officials of Track Machine Organisation

Table 1.1			
Track machine*	**Inspection frequency of Track Machine Officials**		
	Dy.CE/TM/ Line	**AXEN /XEN/ TM/Line**	**SSE/TM/SDI or SD**
RGM	3 months (owning railway)	Monthly (owning railway)	Fortnightly (owning railway)
	Monthly (working railway)	Fortnightly (working railway)	Weekly (working railway)
TRT	6 Months	Monthly	Fortnightly
TLE/PCCM	1 Year	2 Months	Fortnightly
TEX/CSM/UNIMAT WST	1 Year	3 Months	Monthly
BCM/SBCM	1 Year	2 Months	Monthly
MPT/DTS/BRM/ UTV/RBMV	Need Basis	4 Months	2 Months

**The inspection schedule is for individual machine. e.g. if there are 3 BCMs under one division, then AEN/TM/Line shall inspect each BCM, once in 2 months*

The inspecting officials shall issue inspection reports to their concerned immediate subordinates with a copy marked to immediate concerned superior.

114 Inspection Schedule of Open Line Officials - The schedule of inspection of Track Machines for open line officials shall be as here under:

Table 1.2				
Track Machine	**Inspection frequency of open line officials**			
	Sr.DEN	**ADEN**	**SSE (P.Way) in-charge**	**JE (P.Way) sectional**
TEX, CSM, DTS, WST, UNIMAT and SBCM	3 Months	Fortnightly	During supervision of pre-block, during block and post-block works but not less than once a week	During supervision of pre-block, during block and post-block works but not less than once a week
RGM, TRT, TLE, PCCM and BCM	2 Months	Fortnightly		
MPT, BRM, UTV, RBMV etc.	As per need	Once during the deployment		

Sr. DEN/DEN and ADEN shall inspect the track machines as per above schedule, duly covering other aspects like, adequacy of all allied track works, quality of machine work, safety aspects involved, items pertaining to the welfare of machine staff, records such as programme of tamping, actual tamping, variations, repeated tamping, speed restriction etc.

Copy of inspection report of ADEN shall be sent to AEN/TM/Line and that of Sr. DEN/DEN shall also be sent to Chief Engineer/TM and Deputy Chief Engineer/TM/Line and Dy.CE/TM/HQ in addition to concerned subordinate officials.

115 Items to be Inspected - RDSO has issued checklist for inspection of each type of track machine, which is available on the web site of RDSO. The list of the same is also given in Chapter 8. However, the broad list of items to be checked and inspected by track machine as well as open line officials is given below.

(1) Inspecting Officials of TMO as well as Open Line

(a) Pre Block Inspection - They shall reach the stabling siding or station at least one hour before the block time. They shall check the following:

(i) Staff accommodation/facilities.

(ii) Infrastructural facilities like sidings, rest house, water supply and electrical connection etc.

(iii) Knowledge of safety rules of SSE/TM, MCM, TMM & machine assistants.

(iv) Working of emergency backup system for clearing block in case of machine failure.

(v) Adequate safety of staff working in block section against danger of incoming trains on adjacent lines.

(vi) Staff attendance.

(vii) Checking of competency certificates, route learning and medical fitness of staff, issues of field staff.

(viii) Records of the machine failures and general health of machine.

(ix) Availability of Codes and manuals with latest correction slips.

(x) Availability of safety items/equipment as per prescribed norms.

(xi) Availability and expiry date of detonators, fire extinguisher and first aid box.

(xii) Availability of machine deployment plan and the actual deployment vis-a-vis the plan.

(xiii) Working of braking system.

SSE/JE/P.Way shall inspect item (i) to (v). They will check the knowledge of safety rules for MCM, TMM and machine assistant.

(b) During Block Working - Inspecting officials shall inspect working of the machine(s) and safety precautions and practices observed, during traffic block in addition to attention to pre-requisites, works to be done during and post machine-working activities. They shall record the results of their inspection and ensure compliance within a reasonable time. Immediate action shall be initiated in respect of areas where the condition of machine or track aspects needs quick attention. A report shall be submitted to the next higher authority at the end of every month indicating inspections carried out, deficiencies noticed and remedial actions taken.

(c) Machine Specific Items - Items to be checked for different machines by TMO as well as open line officials are listed below:

(i) **TAMPERS**

- Adequacy of track data required for the selected mode of working.
- Mode of working and its appropriateness.
- Condition of tamping tools.
- Tamping parameters like; tamping depth, squeezing time, squeezing pressure, vibration pressure.
- General lift, ramp in and ramp out, slew, lift, versine values, SE etc.
- Tamping quality.

(ii) **BCM**

- Condition of cutting chain and its fingers.
- Condition of Screens.
- Pre-survey and removal of obstructions.
- Quality of screening and ballast distribution.

- Waste conveyor safety switch operation.
- Width and depth of cutting of ballast profile.
- Safety precaution at closing of work.

(iii) **TRT**

- Condition of BFR, gantry rail and bridge rail.
- Sleeper picking and laying system (NT and OT conveyor).
- Sleeper spacing system (Index wheel).

(iv) **BRM**

- Functioning of all systems for dressing and distribution of ballast.
- Condition of broom and conveyor belt.
- Condition of different ploughs.
- Working of hopper system where provided.
- Quality of profiling done.

(v) **SBCM**

- Condition of cutting chain and its cap.
- Condition of Screens.
- Screening width.
- Operations of waste conveyor safety switch.
- Quality of screening.

(vi) **TLE**

- Proper laying of auxiliary track and its support system.
- Working mode and working speed of machine.
- Condition of BRNs.

(vii) **PCCM**

- Function of motorized trolleys.
- Arrangement of wooden block support for crawler.
- Proper hooking of turnout.
- Condition of hooks and pins.
- Quality of laying (alignment) by machine.

(viii) **UTV/RBMV**

- Condition of crane and its attachments for lifting materials.
- Availability of all specified tools and plant and their condition.
- Condition of BRNs.

(ix) **RGM**

- Condition of Grinding stone and spark arrestors.
- Check track data in GDMS format uploaded in machine, particularly direction of curve.
- Grinding inputs (pattern) and input system.
- Measurements at identified test locations wherever existing.
- Sufficient water in water wagon and its discharge system.
- Grinding quality and improvement in GQI.
- Cleaning of machine of iron dust and its proper disposal.
- Precautions at location of obstructions like points and crossing curve with checkrail etc.

(x) **DTS**

- Frequency of Vibration and static load.
- Working mode and working speed.
- Track parameter after work.
- Precautions taken on bridges, tunnels etc.

(2) **Inspecting Officials of TMO- Additional items -** Track Machine officials shall carry out inspections as per laid down schedule and in accordance with detailed check list issued by RDSO. Few important additional items to be checked are given below for guidance.

(a) General

(i) Details of work done since last POH, IOH, and adherence to other maintenance schedules of machines.

(ii) Condition of camping coach.

(iii) Availability of critical spares and consumables.

(iv) Functioning of safety devices, control unit and measuring units and general cleanliness of the machine.

(v) Tightness of the nuts and bolts of all moving and vibrating items.

(vi) Availability of tools and plants.

(vii) Follow up action on Service Engineer's reports.

(viii) Availability and proper maintaining of records.

- Log Book.
- History Book.
- Register of Periodical Maintenance Schedules.
- Critical Spare part List.

- Failure register.
- Follow up action on Service Engineer's reports.
- OEM manuals.

(b) Engine

(i) General condition of engine with respect to starting problem.

(ii) Engine hours total, since last POH, and last attention given.

(iii) Smoke condition.

(iv) Belt condition and tension.

(v) RPM.

(vi) Oil pressure.

(vii) Oil temperature.

(viii) Oil leakages if any.

(c) Hydraulic System

(i) Measurement of hydraulic pressure of various units.

(ii) Maximum hydraulic temperature.

(iii) Condition of hydraulic cooler.

(iv) Quality of fitment of hose assemblies, leakages.

(v) Quality of hydraulic oil.

(vi) Level of hydraulic oil etc.

(d) Pneumatic System

(i) Air pressure and leakages.

(ii) Working of water separator.

(iii) Functioning of air oiler and air dryer.

(iv) Functioning of various valves.

(v) Functioning of brakes.

(vi) Condition of brake shoe and gap.

(e) Electrical and Electronics

(i) Condition of battery.

(ii) Condition of self-starter and alternator.

(iii) Condition of transducer.

(iv) Condition of all gauges, meters.

(v) Condition of lights, hooter.

(vi) Condition of safety devices like limit switches etc.

(vii) Condition of cable code and terminal code in junction box.

(f) **Oil and Water Level –** Level of oils like engine oil, diesel, transmission gearbox and other gearboxes oil, axles gear oil and coolant/water in radiator etc.

(g) **Filters –** Replacement/cleaning of air filters, air dryer filters, diesel filters, hydraulic filters and lube oil filters as per schedule.

(h) **Lubrication (Oiling and Greasing) –**Adequacy of oiling and greasing of all ball and socket joints, movable parts and cardon shaft as per schedule.

(i) **Specific Items to be seen in Different Machines –** Following items specific to machines should also be checked in addition to that mentioned at Para 114 (1)(c) above:

(i) **TAMPERS** – Condition of rail clamps, hooks, trolleys, tamping bank, tool tilting system, lining & lifting system, satellite, working of ALC, Laser, GVA system etc.

(ii) **BCM** – Condition of cutter bar, screens, wear plates, corner rollers, turret gear, plough, conveyors belts etc.

(iii) **TRT** – Condition and working of conveyer pads, sled, dynamic plough, clamping and guiding rollers etc.

(iv) **BRM** – Condition of wear plates of different ploughs, rail top clearing, rubber elements etc.

(v) **SBCM** – Condition of conveyor belts, tooth bucket & ditcher wheel etc.

(vi) **TLE** – Condition of sleeper gripper, rail clamps, sliding frames, simplex and duplex chains etc.

(vii) **PCCM** – Condition of clamps, sliding frames, crawler and trolleys etc.

(viii) **UTV/RBMV** – Condition of outrigger and lifting capacity of crane.

(ix) **RGM** – Grind modules tilting system, dust collection system, working of all grind motors and automatic system of its operation linked with grind stone, working of front and rear camera, functioning of obstruction detection system, working of buggy up and down system and its locking.

(x) **DTS**- Roller clamp condition, working of vibration unit and preloading unit.

(3) **Inspecting Official of Open line - Additional Items -** Open line officials shall look for the following items also in addition to those listed above:

(a) Output of the machine vis-a-vis traffic block.

(b) In Tampers, they should check tamping charts and check reasons and suggest for remedies to increase tamping cycle.

(c) In BCM's they shall ensure that depth of cutting is a judicious mix of lifting and excavation based on advance survey and proposed L-section.

(d) Check benchmarks & reference marks and obligatory points.

CHAPTER 2

TAMPING MACHINE AND DYNAMIC TRACK STABILIZER

201 General - Purpose of tamping and stabilization of track (ballast bed) is to produce well compacted sleeper supports in order to improve the load distribution across sleepers, restore track to correct geometry and have long lasting retentivity of packing. Tamping machines are used for correcting the track geometry and tamp the ballast while Dynamic Track Stabilizer (DTS) is used for better anchoring of the track skeleton in the ballast bed to improve the durability of track geometry under running traffic.

202 Tamping machine - Tamping machine measures the existing track parameters and lifts it to enable correction of the cross level and alignment, to achieve target or pre-determined parameter values, with an aim to improve the track geometry. It simultaneously packs the ballast under sleeper(s), using tamping tools fitted on tamping unit, to provide well compacted ballast bed.

(1) **Functions -** The main functions of tamping machines are-

(a) Correction of alignment,

(b) Correction of longitudinal and cross levels,

(c) Tamping of ballast under the sleepers.

Some of the tamping machines have additional fitments for track ballast stabilization also.

(2) **General Layout -** General layout and important units of a tamping machine (09-32 CSM) are shown below-

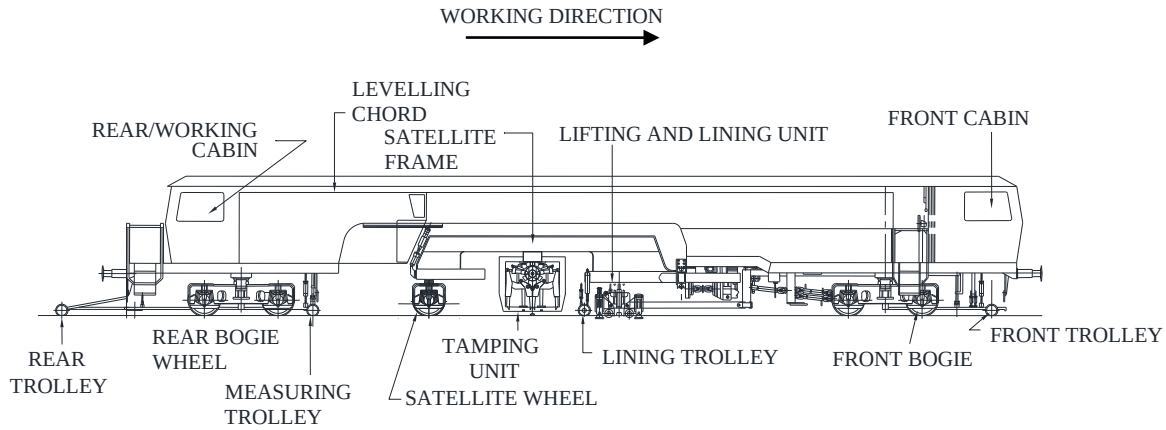

Fig. 2.1

203 Important assemblies of tamping machines

(1) **Engine -** Diesel engine is the main source of power. The engine converts chemical energy of fuel into mechanical energy, part of which is used directly

and remaining further converted into different forms of power for the working of machine.

(a) **Mechanical power through gear boxes -** A part of mechanical power generated is used, by means of hydrodynamic gearboxes (in most of the machines), for movement of tamping machine. Remaining mechanical power is converted to other forms as mentioned below.

(b) **Hydraulic power through hydraulic pump -** Hydraulic power is generated by means of hydraulic pump driven by mechanical power. It provides power for operations during working through various hydraulic motors and cylinders.

(c) **Pneumatic power through compressor -** Pneumatic power is generated by means of compressor driven by mechanical power. It is used for brakes and locking/unlocking system of assemblies, up and down movements of feelers, operation of bogies for datum selection, horn operation and chord tension etc.

(d) **Electrical power through alternator and batteries -** Electrical power is generated through alternator, or sourced from batteries. It is used to provide electrical power for sensing devices, feedback of corrected parameters, signals to hydraulic units, like directional valves, proportional valve and servo valve for operations.

(2) **Tamping units -** Two or more independent tamping units are provided in tamping machine (one or more for each rail depending on the make and model of the tamper). These are mounted on the machine frame by means of vertical guiding columns. In some of the machines, the tamping units are fitted to the satellite frame.

The tamping units on Indian Railways have the capability for tamping one/two/three sleepers at a time depending upon type and model of the tamping machine. The tools are arranged in pairs and each of the two sides of sleeper is tamped by four such pairs, four numbers on either side of each rail. The units are held on horizontal guide columns in order to slide sideways, which allow their manual/automatic centering over the rails in curves. The tools are vibrated by piston rods pivoted on eccentric shaft driven by hydraulic motors.

A typical layout of tamping unit and its different components are shown as Fig 2.2

The lifting and lowering of tamping units is achieved by means of a hydraulic tamping units lifting/ lowering cylinder. The insertion depth of tamping tools and squeezing pressure can be varied for different types of sleepers. In case of simultaneous tamping of double/triple sleepers, the opening width of tamping tools can be changed pneumatically by changing the clapper piece to suit the sleeper opening and by pneumatic operation of clapper cylinders for joint sleepers.

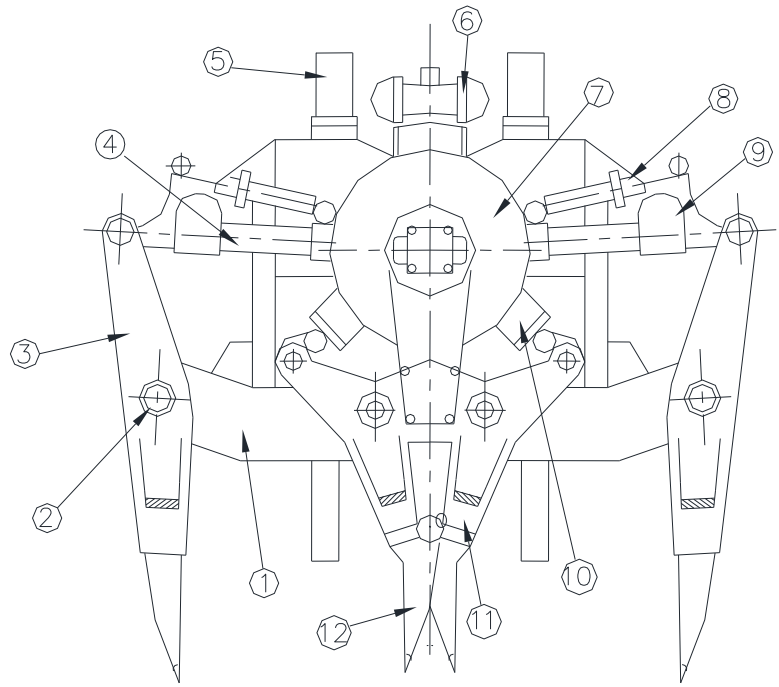

1. TAMPING BANK
2. CENTER PIN
3. BIG TAMPING ARM
4. BIG SQUEEZING CYLINDER
5. GUIDE ROD
6. OIL BATH
7. PLATE GUARD
8. CLAPPER CYLINDER
9. SQUEEZING PLATE
10. SMALL SQUEEZING CYLINDER
11. SMALL TAMPING ARM
12. TAMPING TOOL

Fig. 2.2

(3) **Tamping Tool -** The size & shape of the blade of tamping tool has a bearing on the quality of compaction (tamping) of ballast. The size of tamping tools differs, depending on model/make of tamping machine. Tamping tool with carbide shield called Tungsten Carbide Tamping Tool (TCTT) are now being used for improving the performance of tools. The positions of tamping tools (TCTT) for various machines with important dimensions are depicted at **Annexure 2.1**.

~~(4)~~ **Lifting and Lining unit -** The lifting and lining unit is positioned in front of the tamping units. Lifting is carried out using one lifting cylinder with the help of roller clamps/hook on each side.

The lining operation starts simultaneously with the lifting operation. As soon as the target values are reached, lining and lifting operations are automatically stopped.

(5) **Satellite unit -** Continuous sleeper tamping machines have tamping & lifting cum lining unit, provided on the separate unit called satellite unit. Satellite unit is placed on an independent under-frame, which is mounted on wheels.

It can move independent of the main frame, capable of cyclic movement from sleeper to sleeper.

(6) **Trolleys -** These are wheels mounted units provided with sensing feelers used for measurement and correction of the track parameters. Four trolleys are used in tamping machine, which are- front trolley, lining trolley, height transducer trolley, measuring trolley and rear trolley.

(7) **Brake system -** Following types of braking system are provided on tamping machine-

(a) **Direct brake**- It is applied only on machine during transit.

(b) **Indirect brake-**This brake is used for application on machine and coupled camping coach/wagon while running. This brake system is provided in machines with KE valve. KE valve is available in all new tamping machines. It works with single piping system.

(c) **Emergency brake-** This brake is applied on machine during transit alone or coupled with camping coach/wagon only when KE valve is in 'ON' position. It is applied through indirect brake system.

(d) **Safety brake-** This brake is applied automatically by switching off hydrodynamic transmission gear (ZF Gear in Plasser machines). Normally this should not be used for service brake application.

(e) **Parking brake-** This is hand operated mechanical brake, applied when machine is stabled.

204 Types of tamping machines

(1) **Tampers without Satellite unit -** The tamping unit and the lifting cum lining unit are mounted on the main frame of the machine itself. The machine moves and stops at every sleeper for lining, levelling and tamping. One to two sleepers can be tamped simultaneously in one operation. Following machines fall in this category.

(a) **Duomatic (Plain Track Tamper) -** It is a Plain track tamper and with 32 tamping tools to pack two sleepers at a time. These machines are also referred as Work Site Tampers (WST) for purpose of nomenclature. The names of the models of Duomatic tamping machines presently in use on Indian Railways; and the name of manufacturer, are given below-

(i) **08-32 Duomatic (Plasser India).**

(ii) **08-32C Duomatic (Plasser India).**

(iii) **08-32 WST with flat car(Metex–JSC Moscow, Russia).**

(iv) **VPR-02M without flat car(Kalugaputmash, Russia).**

The important features/dimensions of these machines are given at **Annexure 2.2**

(b) **UNIMAT (Points and Crossing Tamper) -** This is primarily a points and crossing tamping machine. Tamping unit of this machine is designed in a manner to allow independent operation of individual tamping tool. This helps in tamping of almost all the sleepers in points and crossings. Tamping tool(s), which infringes any track component, can be tilted individually or in pairs and rest of the tools tamp the sleepers. Tamping unit in most of these machines can be rotated to align with the sleepers, which are laid at an angle e.g. Fan Shaped Layout design. Advanced models of UNIMAT have the arrangement for lifting of third rail and more advanced have the provision for both; lifting as well as packing under the third rail. Various models of UNIMAT machines presently in use on Indian Railways with the name of the manufacturers are as under-

(i) **08-275 UNIMAT (Plasser India).**

(ii) **08-275-3S UNIMAT (Plasser India)** with arrangement only for lifting of third rail.

(iii) **08-475-4S UNIMAT (Plasser India)** with arrangement for lifting and packing under the third rail.

The important features/dimensions of these machines are given at **Annexure 2.3**

(c) **Multi-Purpose Tamper (Plain and Points and Crossing Tamper) -** This machine is designed for spot attention on plain track as well as point and crossing. These may have a flat platform at rear end with crane facility for loading, unloading and transportation of P.way materials. Various models of Multi-Purpose Tampers, presently in use on Indian Railways are as given below-

(i) **UNIMAT Compact (MPT) (Plasser India),**

(ii) **UNIMAT Compact Split Head (MFI) (Plasser India).**

The important features/dimensions of these machines are given at **Annexure 2.4**

(2) **Tampers with Satellite Unit -** These machines are provided with a satellite unit, which moves independent of the main machine in working mode. Components required for tamping, aligning and levelling of track are provided on this satellite unit. While the main machine moves at a uniform speed continuously, the satellite unit moves and stops at every sleeper (sleeper set) for lining, levelling and tamping. These machines do twist correction also. Different models of these types of machines can tamp two/three sleepers in one operation. The machines falling in this category are-

(a) **09-32 CSM (Plain Track Tampers) -** It is a Plain track tamper designed for lining, levelling, twist correction and tamping of sleepers. It has

tamping unit with 32 tamping tools to tamp two sleepers at a time. Single chord lining and double chord parallel levelling systems are used. The important features/dimensions of this machine are given at **Annexure 2.5**

(b) Tamping Express (09-3X) (Plain Track Tampers) - It is a plain track tamper designed for lining, levelling, twist correction and tamping of sleepers. It has 48 tamping tools to tamp three sleepers at a time. Single chord lining and double chord parallel levelling systems are used. The important features/dimensions of these machines are given at **Annexure 2.6**

205 Tamping Mechanism - The tamping units work according to the asynchronous constant pressure tamping principle. The tamping tools penetrate the ballast and perform a closing movement with sinusoidal vibrations, as shown in Fig 2.3.

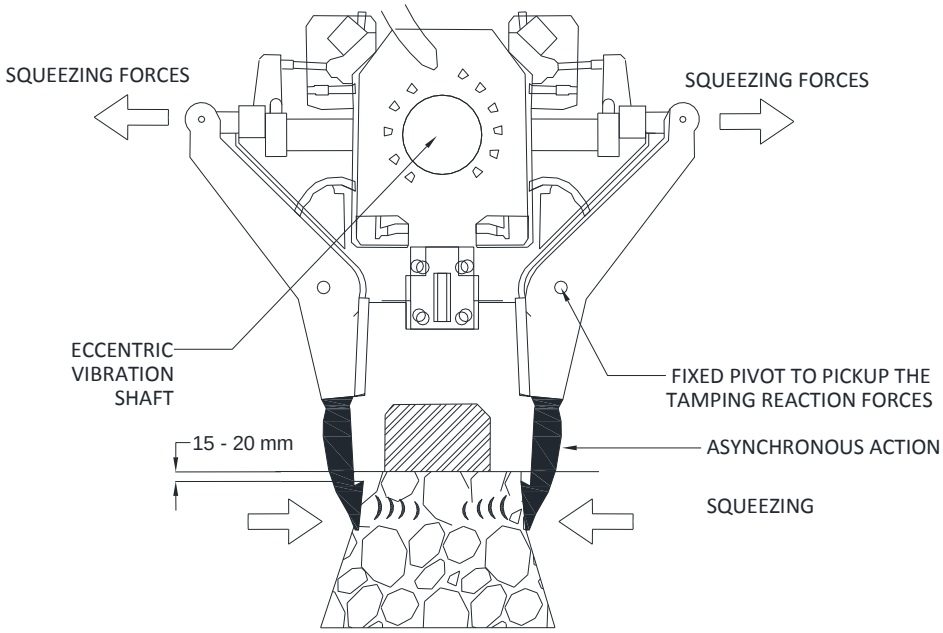

Fig. 2.3

The tamping tools continue to move, pressing the ballast till desired force is reached and thus each of the tools applies the same force on the ballast. Since each of the tools continue to move for different durations and presses the ballast till the desired pressure is reached, the process is known as asynchronous constant pressure tamping operation. Components of tamping unit are shown in Fig 2.3.

All tamping tools, therefore, apply the same amount of pressure to the ballast being tamped; thus there is equilibrium of forces between the individual tool pairs and the specific surface pressure of all tools. During tamping of ballast, resistance gets built up in front of each pair of tools. The movement of the tool is completely

independent, according to the resistance encountered from the ballast. Once the resistance reaches the pre-selected value (hydraulic pressure in the squeezing cylinder), the corresponding tool pair stops squeezing automatically, however other tool pair(s) continue to squeeze till the resistance for those also becomes equal to preselected pressure. Individual tools may have different closing movements as shown in Fig 2.4

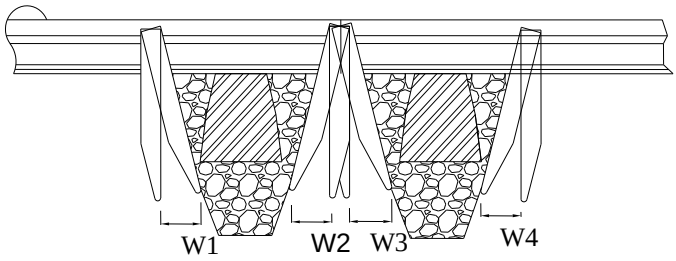

Fig. 2.4

206 Tamping parameters

(1) **Squeezing pressure -** Squeezing force per unit effective area of squeezing piston is called squeezing pressure. The force at face of tamping tool for consolidation of ballast will correspond to this squeezing force.

For tamping units, presently available with Indian Railways, the squeezing pressure for different track structure is as below:

Table 2.1

Type of Track and Sleeper	Squeezing Pressure
Plain Track (CST9)	90-100 Kg/cm^2
Plain track (ST& wooden)	100-110 Kg/cm^2
Plain track (PSC)	110-120 Kg/cm^2
P & C (ST/Wooden)	110-115 Kg/ cm^2
P & C (PSC)	125-135 Kg/ cm^2

The squeezing pressure should be kept on higher side of the stipulated range for caked ballast, however for deep screening sites and newly laid tracks with unconsolidated ballast bed, it could be on lower end of the range.

(2) **Tamping depth -** For effective tamping of the ballast below the sleeper bottom, under the rail seat, the gap between top edge of the tamping tool blade and bottom edge of sleeper in closed position of the tamping tool should be adjusted depending upon the type of rail and sleeper. The desirable gap between top edge of the tamping tool blade and bottom edge of sleeper for different types of sleepers will be as under-

Table 2.2	
Type of Sleeper	**Desirable gap between top edge of the tamping tool blade and bottom edge of sleeper**
Flat bottom sleeper	15-20 mm
Metal sleeper	22-25 mm

To obtain the correct depth of tamping tool during packing of sleepers, the initial (Zero) position of tamping tool is set as shown in Fig 2.5

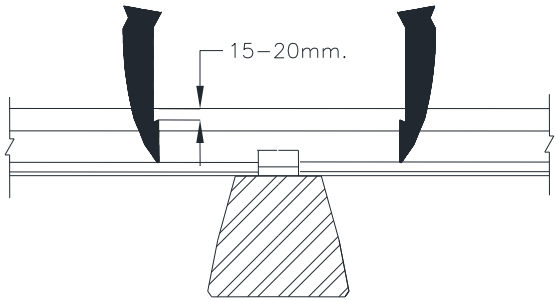

Fig. 2.5

Tamping tool depth is calculated as:

Tamping tool depth = Sleeper depth at the rail seat location + Rail height + rubber pad thickness

***Example 2.1*:**

For a track with 60 Kg rail and sleepers, the tamping depth will be

= 172 mm (rail height) + 210 mm (sleeper depth) +6 mm (thickness of rubber pad to drawing no. RDSO T-3711)

= 388 mm (Fig 2.6)

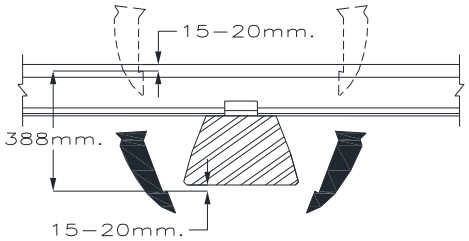

Fig. 2.6

(3) **Tamping Tool Vibration, Amplitude & Frequency -** The tamping tools are vibrated by piston rods pivoted on eccentric shaft driven by hydraulic motors with following parameters-

Table 2.3	
Parameters	**Value**
Rate of revolution of vibration shaft	2000 to 2100 RPM (approx.)
Vibration frequency of tamping tool	33 to 35Hz. (approx.)
Amplitude of oscillation	3-5 mm

These values may vary depending on design/model/make of tamping machine. Technical manual of the machine may be referred for details of all such parameters.

(4) **Vibration pressure -** The vibration pressure of tamping tool is so adjusted that vibration does not slow down or stop even while penetrating the ballast. The vibration pressure varies from machine-to-machine and ranges from 150 to 210 Kg/cm^2.

(5) **Tamping cycle & squeezing time -** A complete tamping cycle involves lowering of tamping unit to the desired depth, squeezing of ballast (till all tool pairs reach pre-defined squeezing pressure), holding of tamping tools in that position, releasing and lifting of tamping unit & travelling of tamping unit to the next sleeper location. Time taken in squeezing the ballast with preset pressure is called the squeezing time.

Normal setting of machine is such that lifting and lining of track starts when the tamping unit is lowered by about 100 mm from its zero position. Squeezing action commences about 30 mm before the tool reaches the target depth. Squeezing

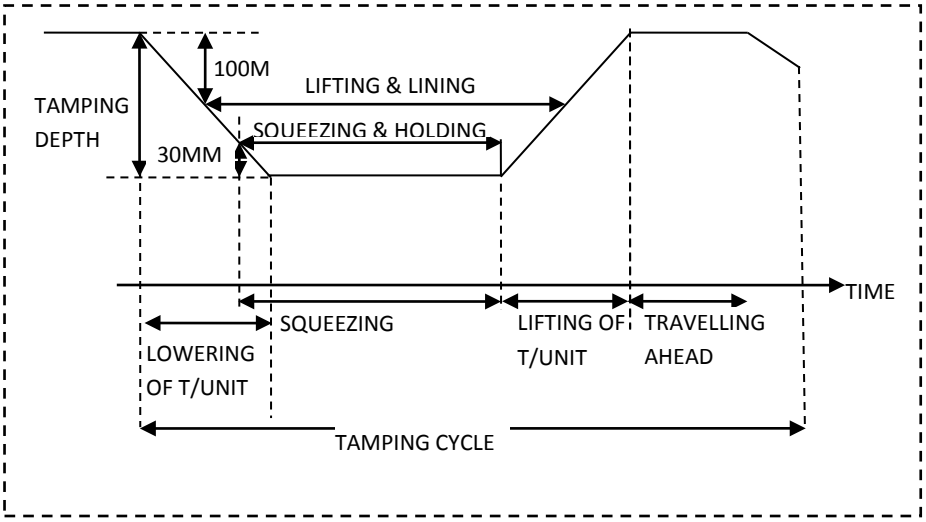

Fig. 2.7

circuit is cut-off as the preset squeezing time is completed. The tamping unit is then lifted in succession. Lifting and lining circuit is cut-off when tamping unit, while in lifting operation, is 100 mm before the Zero position. For maintenance packing, squeezing time of 0.8 second to 1.2 second should normally be adequate. Higher value of the above range of squeezing time is required for track with caked up ballast.

(6) **Tamping tool surface area -** Surface area of tamping tools blade of different machines is given in **Annexure 2.1.** Tools with more than 20% wear of the original surface area should not be used. The worn out tools are to be reconditioned/replaced.

207 Optional equipment - The use of optional equipment like Laser Beam System, Geometry Value Assessment (GVA), and ALC etc. simplifies working and reduces error-proneness associated with manual system of data collection and feeding. These systems are briefly described below-

(1) Laser beam system - A pair of photocells mounted on tamping machine receives a fanned-out laser beam from laser emitter. In case of unbalanced laser input received by photocells, a corresponding differential signal activates an electric motor, to move the whole receiver assembly along with front end of the chord to the centre of the laser beam. Thus, front tower end of chord is shifted laterally by the amount of error to enable design lining and levelling. Working of Laser Beam system is explained in **Annexure 2.7.**

(2) Geometry Value Assessment (GVA) - It is a small computer, which eliminates the feeding of adjustment values from tables and marking on sleepers. The locations of main points of curve i.e. starting of transition, transition length, radius, super elevation data etc. are fed into the computer.

The use of GVA eliminates the necessity of attention by operator for feeding values and thus avoids possible mistakes in calculations and/or feeding, which result in better progress with improved quality.

(3) Automatic Guiding Computer (ALC) System - It is advanced system, which automatically calculates the values of various track parameters, to be fed into machine on the basis of target track geometry. It has the capability to measure and record existing track parameters during a measuring run, in advance of working, and also allows flexibility to choose the desired track geometry. It also saves the operator from entering various parameters to be fed, as it does automatic feeding of parameters. The detailed working of this system is explained in **Annexure2.8**. ALC's are being provided with fault finding diagnostic software also.

(4) Data Recording Processor (DRP) System - It is a system for recording track parameters during working operation, at the working speed of the machine. It records the parameter of tamped track, like unevenness, alignment, cross-level, twist. The measuring sensors are so mounted that tamped track parameters are recorded in the working direction of the machine. It has a

system to predefine the limits of individual parameters and it is possible to evaluate and classify the measurement results. The parameters can also be displayed graphically along with calculated standard deviations of different parameters in small lengths (say 200 meter section). Apart from the track parameters, it can also be designed to record the machine working parameters like squeezing time, squeezing pressure and squeezing depth.

(5) Computerized Measuring System (CMS) - This is on board computer used for displaying track parameters measured i.e. super elevation, versine and Longitudinal level etc. It also displays the nominal value fed by the operator. It also displays lifting and lining values fed manually, through Laser system and through ALC separately. It is used for digital calibration of lining and levelling system (For calibration of systems controlled by servo valve) & diagnosis of signals for proper working of these units.

(6) Computerized Working System (CWS) - This computer receives the various machine working parameter (controlled by proportional valve) from its circuit some of which are listed below and displays it on monitor-

(a) **Driving**: RPM of engine, work drive speed, run drive speed etc.

(b) **Tamping**: tamping depth, tamping position, speed of up and down of tamping unit, squeezing pressure, squeezing time etc.

(c) **Satellite drive** (if provided): satellite speed etc.

(d) **Automatic positioning**: Sleeper distance setting during automatic working.

It is also used for setting of the above parameters i.e. tamping parameter like tamping depth, squeezing time, squeezing pressure, satellite forward and reverse speeds etc.

208 Lining system - Lining system is for measuring and correction of track alignment. Single chord lining system is used in all tampers working on Indian Railways. The chord stretched between front and rear trolley is used for measuring alignment of track by means of measuring transducers. The track is, then slewed by lifting-cum-lining unit to the target alignment.

For the purpose of lining -

- Machine measures alignment of only one pre-selected reference rail and rectifies that rail i.e. reference rail.
- The alignment of other rail, being fixed with the sleeper, automatically gets rectified except for correcting the gauge defect.
- Versine on curved track depends on radius of curves, chord length for measurement and location of measurement.

(1) Reference Rail - The reference rail for carrying out attentions to alignment should be selected as given below-

(a) On curved track – outer rail (however, if outer rail is highly worn out, inner rail should be taken as reference rail).

(b) On straight track on single, double and middle line in multiple line section –Any of the two rails of the track being tamped, which is less disturbed.

(2) **Lining method -** Tamping machines follow two methods of alignment correction; 3-point & 4-point. Some of the latest machines have provision for only 3-point lining method.

(a) **4- Point Lining method -** The selected reference rail is measured at four points on the curve taking two measurements for versines. These values are then compared to correct the geometry. This method reduces existing error significantly to improve the track alignment.

(b) **3- Point Lining method -** The selected reference rail is measured using 3-points and the lining is performed until the measurement at middle measuring point reaches the target versine value. This method restores the geometry to almost perfect provided correct measurements are fed.

209 4 Point Lining method

(1) **Lining principle -** This method can be used for correcting alignment of only the curved track. In this method track is measured at 4 references point and versines measurements of two intermediate points are compared (using geometrical versine ratio relation) to control the lining. The principle followed is that, in a circular curve, versines measured at two pre-decided locations on a chord of given length will have a fixed ratio, depending on the position of measuring points. This versine ratio is constant and is independent of the radius of the circular curve . The four points in machines are as below-

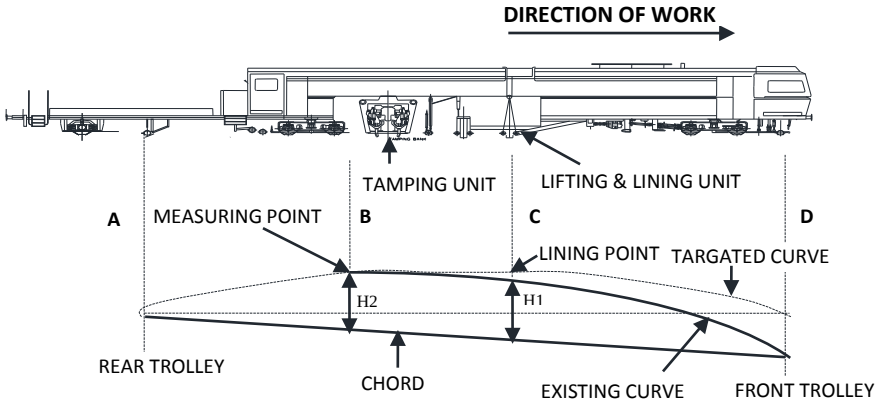

Fig. 2.8

Here A is the rear trolley location, B is the location of measuring trolley (where versine is measured), C is lining trolley (where also versine is measured and correction is done), and D is the front trolley location.

Trolleys at A, B, C and D are pneumatically pressed against the outer rail (reference rail selected for alignment). A wire forming the chord is stretched between A and D representing the 'base Line'. The transmitting potentiometers (transducers), which are fixed to the measuring trolley B and lining trolley C are connected to this wire by means of forks and the wire drives for measurement of versines. The geometrical property used in this method is explained below-

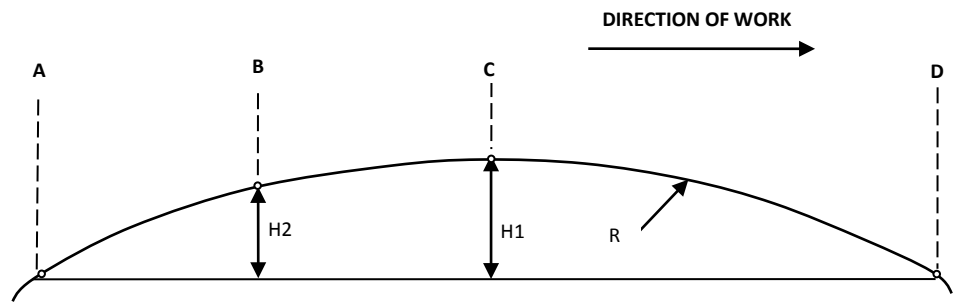

Fig 2.9

From the above figure,

Theoretical Versine H_1 $= \frac{AC.CD}{2R}$

Theoretical Versine H_2 $= \frac{AB.BD}{2R}$

Versine Ratio i $= \frac{H1}{H2} = \frac{AC.CD}{AB.BD}$ *(is independent of radius of the curve)*

$$H1 = i.H2$$

Machine does the curve correction by slewing point C, until Versine H_1 is in the correct ratio to **H_2 (H_1 =i.H_2)**. The Versine Ratio **'i'** is the property of machine and depends on respective distance between the trolleys. The value of **'i'** for various machines are listed in **Annexure 2.9**

In a four point lining system, location of A is taken as first reference point for subsequent corrections. It is, therefore, important to choose initial point, on the track with correct geometry, as pre-existing error at the initial point will get transmitted to track location being corrected. All subsequent corrections will also have accumulated errors.

Points A & B of the machine always remain on the corrected track (corrected w.r.t previous positions). Point D always remains on the portion of track, which is yet to be corrected. Lining correction is done at point C. The machine system feeds **H_2** in system, where it is multiplied with constant **i**, to give **H_1**. This value **(H_1)** is then fed in difference amplifier and error, if any, is indicated on the galvanometer. The alignment is corrected at C by lining

units so that H_1 becomes equal to $H_2.i$ or the ratio $H_1/ H_2 = i$ is maintained and galvanometer indicates zero reading.

In the machine having satellite units, the constant value **'i'** may vary due to relative movement of position C. To overcome this problem a compensation system is provided to automatically adjust for measuring locations.

(2) Application of 4-Point Lining Method - 4- point lining method can be used in following situations-

(a) When theoretical track geometry is either not known or not required to be known, track is aligned according to geometrical properties of existing curve.

(b) When, due to the location of track defects, the track slewing values are expected to be so large that they cannot be implemented without additional measures, and it is decided to smoothen the curve and rather than bringing it to the targeted/design profile.

Lining can also be carried out according to reference points or previously set slewing values, as explained below-

210 Corrections to be applied in 4 Point Lining method - The curve to be corrected as explained above has to be further compensated for following errors-

- The error due to front trolley being on disturbed track,
- At variable curvature where front trolley and rear trolley are on curve of different radii and the ratio of H_1/H_2 equal to **'i'** does not remain true, like transitions portion of the curve or while exiting and entering from one curve to another.

(1) Correction (F_D) in 4 Point Lining due to Front trolley on Disturbed track

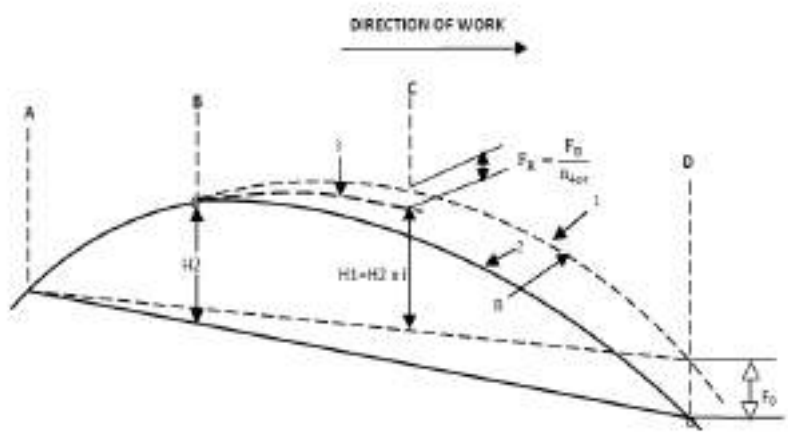

Fig. 2.10

In figure 2.10, curve marked 1 shows the targeted alignment, 2 shows existing position of track (disturbed) being attended and 3 is corrected alignment with front trolley on disturbed track.

Points A and B in figure 2.10 are on the previously aligned track, point D is the front end of the chord i.e. front trolley is on the disturbed track with an error $\mathbf{F_D}$, resulting in incorrect measurement of versine $\mathbf{H_2}$. Point C is slewed until $\mathbf{H_1}$ is in the correct ratio to incorrectly measured $\mathbf{H_2}$. Depending on the distances of the measuring points (which are fixed for a given machine), an error remains at lining Point C, as shown in the figure, which is also called left over error or residual error **'F_R'**.

Left over error F_R = F_D/n_{4pt}

Error reducing ratio n_{4pt} = $\frac{AD.BD}{AC.BC}$

Value $\mathbf{n_{4pt}}$ depends on trolley distances and its value for various machines are given in **Annexure 2.9.**

A Correction equal to F_D in the direction opposite to it needs to be fed in front tower to eliminate this left over error, to apply F_R at lining trolley.

The F_D value has to be computed from the readings taken during field survey to be done prior to tamping. Either of the two methods may be adopted for the field survey.

- Measurement of versine on reference rail of the track (which is generally termed as disturbed track) and calculating slews by suitable software for realignment of curves, for deciding target curve which will be termed as desired curve.
- Survey with respect to fixed references like reference post, OHE masts etc. This is to bring the track on targeted alignment which is termed as design lining.

(2) Versine Compensation (V) in 4 Point Lining at location with changing curvature

For simple curves with transition at either end, the corrections are applied at following sections of the curves:

- For entry of machine from straight to transition and existing from transition to straight.
- Machine working in transition.
- For entry of machine from transition to circular curve and existing from circular to transition curve.

When machine enters from straight to (leading) transition with front trolley on transition and rear trolley on straight, the measurement of $\mathbf{H_2}$ and $\mathbf{H_1}$ are as shown below:

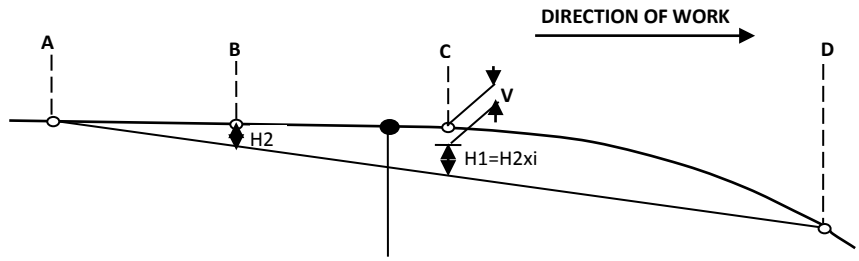

Fig. 2.11

The correct versine at C will be **H_2.i +V,** where V is the versine compensation required to bring track to target position. In the above curve, this compensation will be towards outside of the curve. The value of compensation increases as transition curve is parabolic of third degree and will become maximum (V_m) when entire machine is on transition curve and will then remain constant.

When the machine enters from leading transition to circular curve, the compensation reduces from V_m and will eventually become zero when the entire machine enters the circular curve. Similarly, when the machine enters from curve to trailing transition and from trailing transition to straight, the versine compensation is applied in opposite direction as shown below:

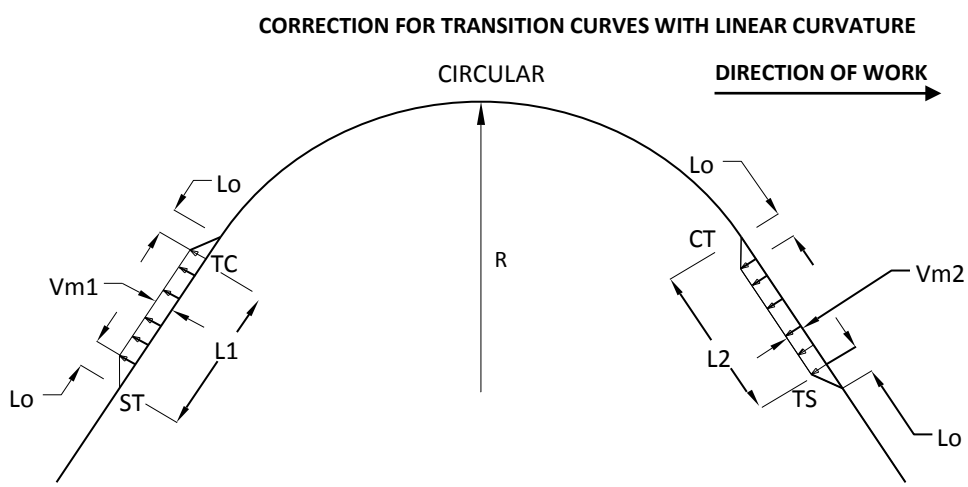

Fig. 2.12

Note: Versine correction is applied at trolley C but is to be fed by operator in front cabin and therefore to be written for front trolley D location i.e CD distance ahead of where it is applied. The above graph has been made accordingly.

Here R is the radius of circular curve, L1 and L2 are the transition length at either end, L_o is the chord length of machine, and Vm1 and Vm2 are maximum versine compensations at the two ends.

The value of Vm depends on 3 factors i.e. position of different trolleys of the tamping machine, length of transition and radius of circular curve and worked out by formula:

$$\boldsymbol{Vm = Machine\ Constant/L.R}$$

$$\boldsymbol{Machine\ Constant = (AC.CD.BC)/6}$$ ***(AC, CD, BC are shown in Fig 2.8)***

Variation of V is not linear from zero to maximum value (V_m). The value of V_m for different lengths of transitions and radii of curves along with corresponding values of V at intermediate locations are given in machine manufacturer's instruction manual.

A sample distribution for V in the chord length of L_o as given manufacturer's instruction manual is given in **Annexure 2.10** for guidance.

In machines with ALC, radius of curve and transition length can be fed into ALC, and feeding of V value is done by ALC itself.

Example-2.2 below explains the method of calculating V and Vm value.

***Example 2.2*:**

To attend a curve of radius R=583 m with transition length 70 m by DUOMATIC 08-32C using 4 Point method.

For DUOMATIC 08-32C from Annexure 2.9

AB=5.0 m, BC=5.3 m, CD=9.35 m, AC=10.3 m, BD=14.65 m and AD=19.65 m.

Machine constant= (10.3x9.35x5.3)/6=85.06,

Hence V_m=85.06/70x583=0.002 m i.e. 2.0 mm

From Annexure 2.10

V value from straight to transition-

Distance from ST and CT (Meter)	*0 to 8 m*	*9 to 13 m*	*14 to 19.7m*
V in mm	*0*	*1*	*2*

Distance from TC and TS (Meter)	*0 to 8 m*	*9 to 13 m*	*14 to 19.7m*
V in mm	*2*	*1*	*0*

ST, CT, TC and TS stands for straight to transition, curve to transition, transition to curve and transition to straight respectively

For remaining portion of transition length V=V_m should be fed. Direction of feeding will be as shown in Fig 2.12.

Note: These values are to be written on sleepers to be fed in versine potentiometer in front cabin when front trolley is above that location

The general principle followed in deciding the direction of feeding (toggle switch) versine compensation is as below:

If machine is entering:-

- ***From large radius (straight has infinite radius) to low radius -towards outside***
- ***From Low radius to large radius -towards inside***

Versine compensation and its direction in different curve layout are as below:

(a) Curve with Transition

(i) **Straight to Transition to Curve to Transition to Straight**

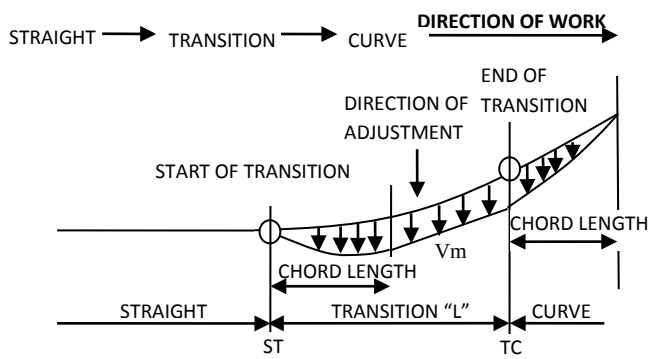

Fig. 2.13

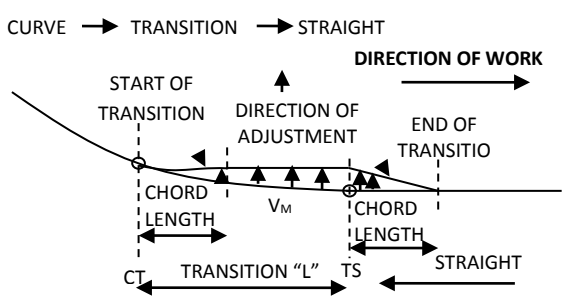

Fig. 2.14

(ii) **Compound Curve**

- **R1>R2 V0=V2-V1**

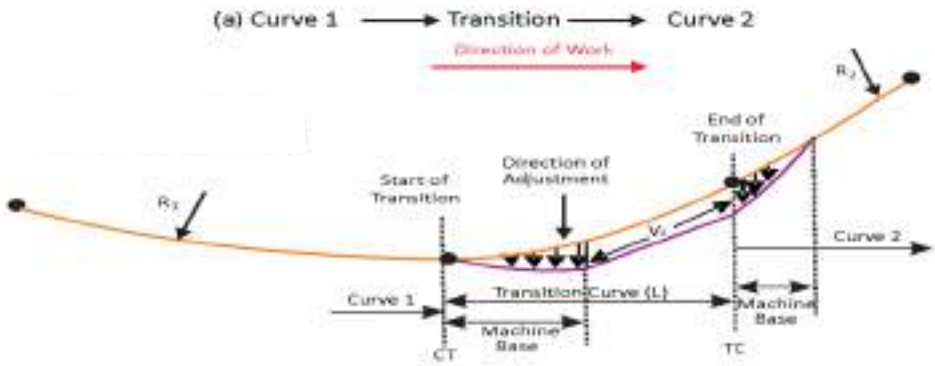

Fig.2.15

- **If R1<R2 Vo=V1-V2**

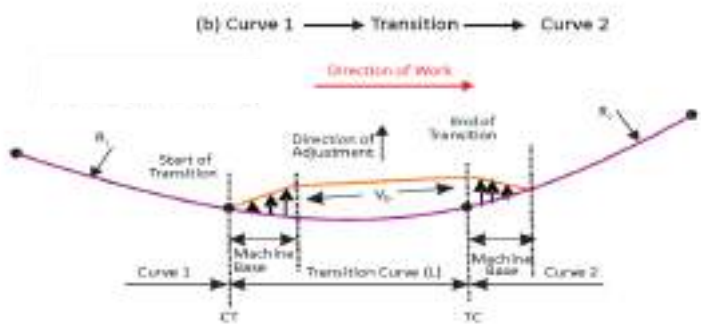

Fig. 2.16

(iii) **Reverse Curve**

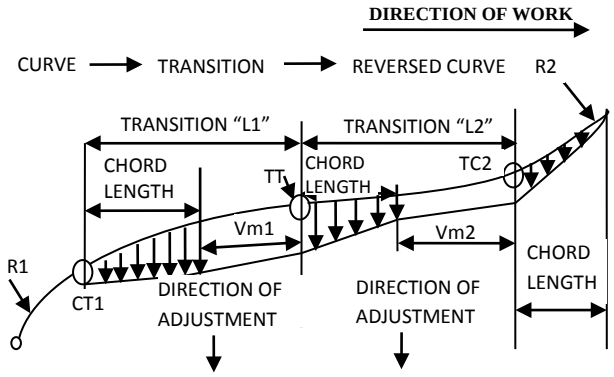

Fig. 2.17

Note: The chord length shown in above figures is machine chord length.

(b) Curve without Transition - For curves without transition, the correction values applied is called F. The versine correction F, when machine is entering from straight into a circular curve is zero at the tangent point SC (Straight Curve Junction) and as the front trolley moves into the circular curve, the value of F gradually increases till it attains a max value F_m. It then gradually reduces, till it becomes zero when the rear trolley reaches at the tangent point CS (Curve Straight Junction). The value of F_m can be calculated as given below-

$$\boldsymbol{Fm = \frac{Constant\ (C_f)}{R}}$$ (fig 2.11)

$$\boldsymbol{Cf = AC.CD.BC/2(AD + BC)}$$

F will increase to F_m at a distance X from SC and from CS where X is equal to

$$\boldsymbol{X = AD.BD/(AC + BC)}$$

The variation of F is not linear. F depends on the position of trolleys and radius of curve. Its value for different curves for a particular machine is given in machine manufacturer's instruction manual. A sample of F values with reference to radius of circular curve for a particular machine, as supplied by manufacturer is shown in **Annexure 2.11**. The method of feeding F value for different curve configurations are given below:

(i) **STRAIGHT –CURVE-STRAIGHT**

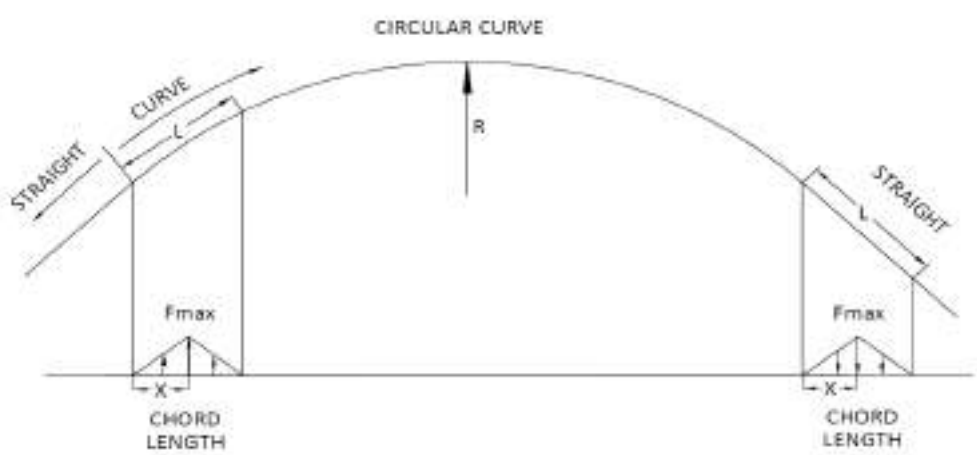

Fig. 2.18

(ii) **COMPOUND CURVE**

- **CURVE 1 TO CURVE 2(**R1>R2**) Fm0=Fm2-Fm1** (Fm1 and Fm2 are corrections as given by machine manufacturer for curve 1 and 2 respectively)

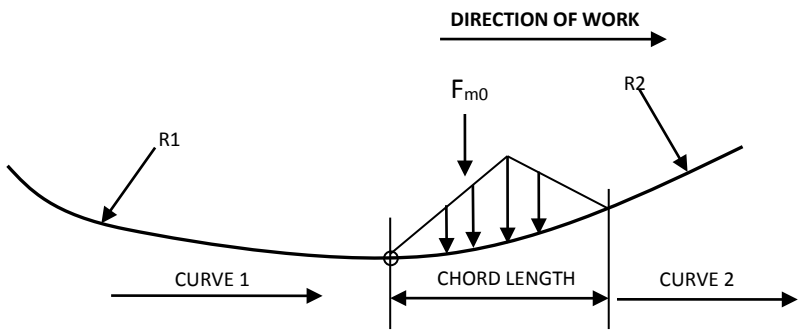

Fig. 2.19

- **CURVE 1 TO CURVE 2 (R1<R2)Fm0 = Fm1 – Fm2**

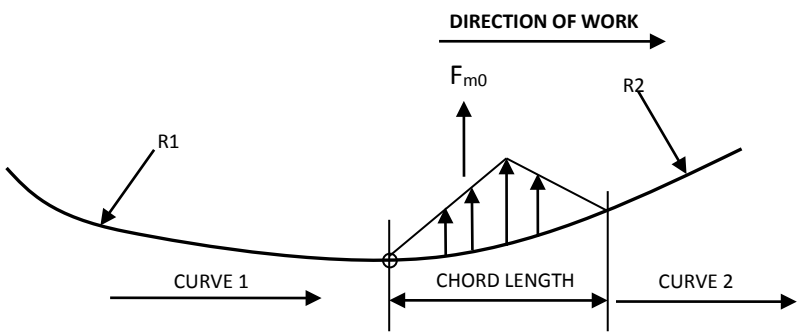

Fig. 2.20

(iii) **REVERSE CURVE (S-CURVE) Fm0 = Fm1 + Fm2**

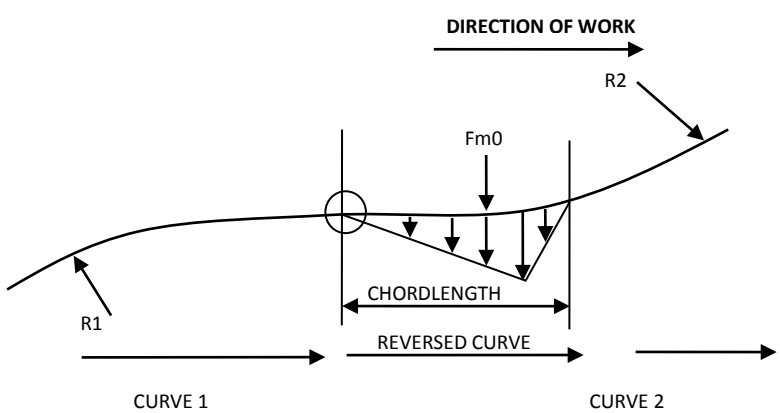

Fig. 2.2

211 Modes of Tamping using 4-Point Lining Method (Only for curves) - The modes of tamping by 4-Point lining method for correcting the curve are

(1) **4-point Smoothening or Compensation Mode -** In this mode, tamping is done on the basis of existing (theoretical/average) track geometry without conducting alignment survey. However, the beginning and end of transitions and radius of circular curve are needed to calculate versine. Compensation value V, for maximum it is called Vm value (for curve with transition). Or F value, for maximum compensation called Fm value (in case

of curve without transition). The value of Vm depends upon transition length and radius and Fm value depends upon radius of curve and depending upon machine constant. The machine constant. In this method existing curve is smoothened, however it is not brought to any targeted profile.

In machines with ALC, radius of curve and both transition length can be fed into ALC, calculation and feeding of Vm value/ Fm value done and feeding of V value is done by ALC itself.

(2) **4- Point Design Lining –** Here field survey of curve to be attended is done in advance to ascertain the error (F_D) from targeted profile (which can be design or desired alignment) at different locations. In addition to correction Vm and V or Fm and F as applicable for design or desired curve (R and L is taken for this curve for all calculations), correction F_D is also applied. The curve here is smoothened and also brought to near targeted profile.

In machines with ALC, radius of curve and transition length can be fed into ALC, and input of V and Vm or F and Fm value is done by ALC itself. Front offset values can also be fed through ALC by making a data file. These values can be fed for any chosen interval (say every 10 m – lower value of 3 to 5 m is desirable) and the ALC interpolates the values for every tamping location in between accordingly. F_D values can be written on sleepers also and fed by operator in slew potentiometer.

Annexure 2.12 gives an example showing stepwise procedure, to be followed for 4-point Lining.

212 3 Point Lining Method

(1) **Lining Principle -** 3- point lining method can be used for straight as well as curved track. The track is measured using three points B, C and D and aligned according to pre-specified theoretical versine at point C. The chord at measuring position B is fixed by the fork and the potentiometer is switched off. The ordinate at C only is measured on chord BD and compared with pre-set (or fed) ordinate value. Any difference detected will activate the lining control to effect the necessary correction.

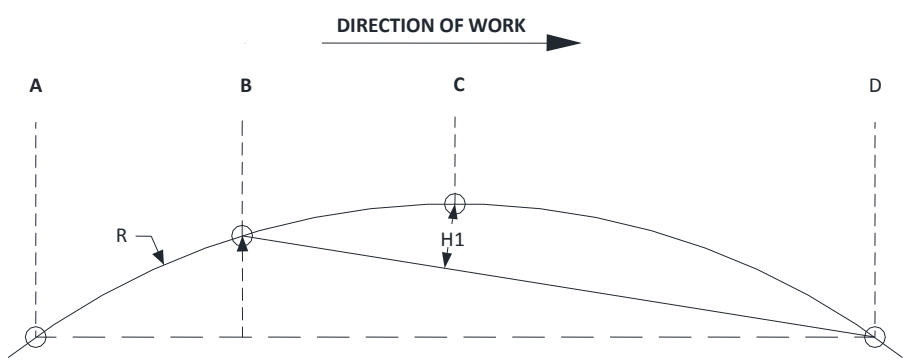

Fig. 2.22

The measuring chord is fixed between Points B and D. Geometrically

$$H1 = \frac{BC.CD}{2R}$$

Theoretical value $H1 = \frac{BC.CD}{2R} = \frac{System\ constant}{R}$

The theoretical versine of H1 at point C is dependent on chord length for a given machine and curvature. Alignment correction is done until the theoretical versine $\mathbf{H_1}$ is achieved.

(2) **Application of 3-point lining method -** The 3-point method is mainly used if-

(a) The track is to be lined according to specified radii or versines. For straight track this versine is taken as zero.

(b) The lining system is used in conjunction with a sighting device and remote control or a Laser.

213 Corrections to be applied in 3- point lining method

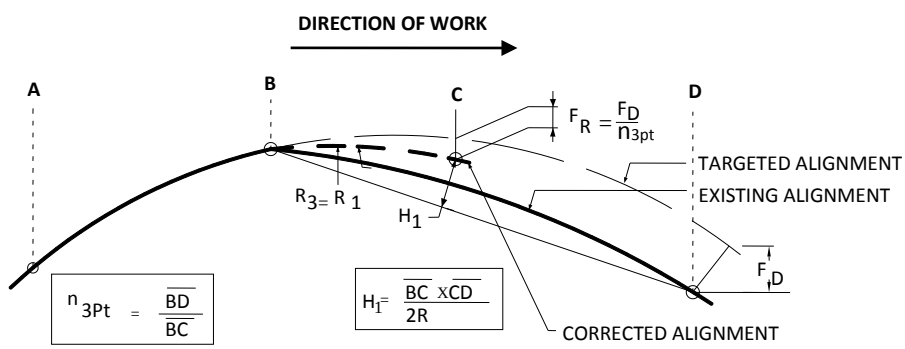

Fig. 2.23

In above figure, Point B is on the already aligned track (target alignment) behind the machine. The front end of the chord, point D is on the existing (disturbed) track and is having lining error $\mathbf{F_D}$. Point C is aligned until $\mathbf{H_1}$ corresponds with the specified theoretical versine. Due to wrong position of trolley D, the residual error $\mathbf{F_R = F_D / n_{3pt}}$, remains, which needs to be corrected. This error, if not corrected, will also results in wrong positioning of trolley B for next position of tamping as machine moves forward and therefore the error at correcting position C further accumulates/increases as machine moves forward.

$n_{3pt} = BD/BC$

n_{3pt} value for available tamping machines is listed in **Annexure 2.9**

The F_D value has to be computed from the readings taken during field survey to be done prior to taking up tamping. Any of the three methods may be adopted for the field survey.

- Survey with respect to fixed references to get slews which is F_D required to bring the track to original design location w.r.t which references were provided.
- Measurement of versine on reference rail of the existing track and calculating slews using software for realignment of curves to get desired curve. The slew value becomes Fd.
- Recording alignment by taking measuring run using ALC and on deciding targeted alignment, the versines to be achieved are calculated by ALC duly considering displaced location of front trolley (F_D). Fd is automatically taken while tamping using ALC and are not to be fed separately.

The correction F_D would be accordingly applied for tamping without using ALC as shown below.

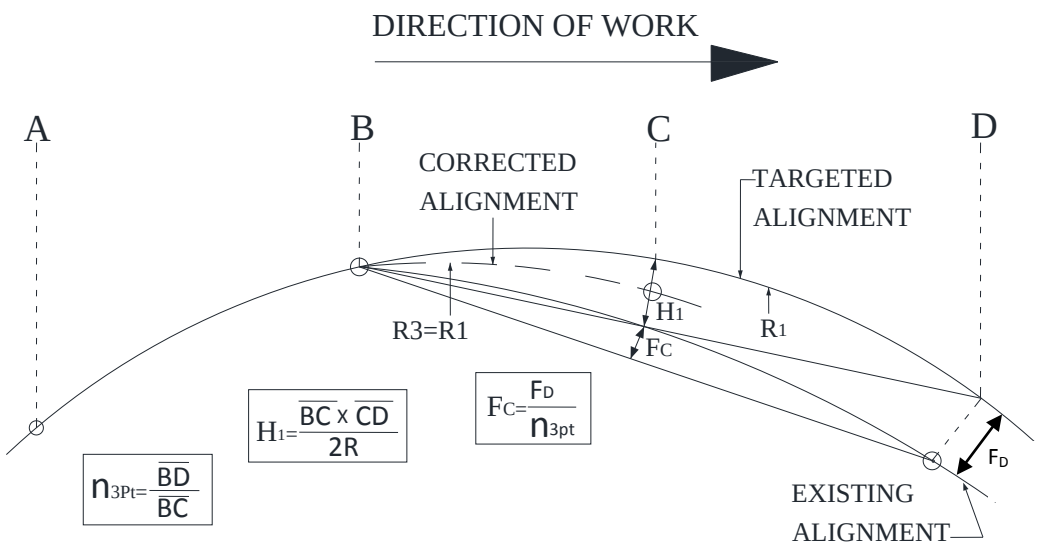

Fig. 2.24

Note: These values are to be written on sleepers to be fed in slew potentiometer in front cabin when front trolley is above that location.

214 Determination of target versine values for the 3-point lining method -Target versines are achieved at C but are fed in versine potentiometer in front cabin. Thus, the versine values to be achieved at trolley C is fed CD distance ahead at front trolley D position. Machine manufacturer has accordingly given the versine diagram to be fed at front trolley position and is discussed below. Following nomenclatures are used for target versines-

H= Target versine of circular curve.

Hx, Hy, Hz, Hw = Target versines for parabolic transitions. (In Plasser India Machines, these parameters are shown as Ha,Hb,Hc,Hd. Hv is the rate of increase/decrease of versine in transition.

The target versines for different portions of curve are calculated as shown below-

(1) Curve with parabolic transitions

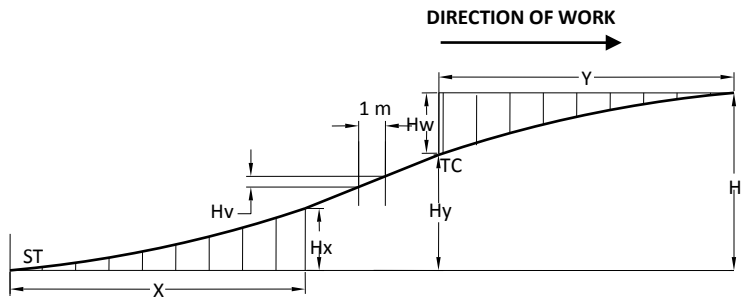

Fig. 2.25

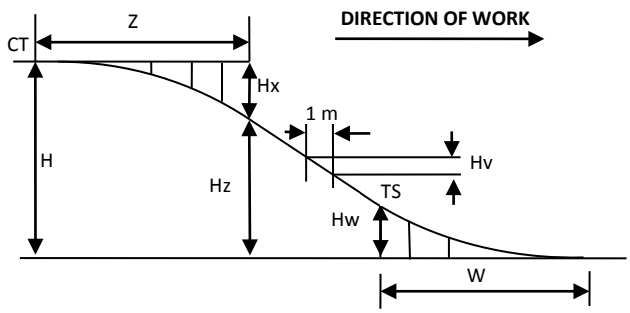

Fig. 2.26

Section X, Y, Z and W equal to machine chord length (BD) for 3point lining.

The versine of circular curve is:-

$$H = \frac{System\ constant\ value}{R}$$

SECTION X - The versine Hx for section X is calculated by dividing the prepared operation constant value "Cxz" for X and Z portion by the product "R* L1". L1 is the length of transition at entry.

Hx =Operation constant value for X & Z (Cxz)/(R.L1) = $\frac{C_{xz}}{R.L1}$

BETWEEN SECTION X and Y - After section X till TC (end of the transition) the versines are increased by adding of one "Hv" per meter

Hv = System constant value/R*L1 = $H/L1$

SECTION Y - Hy for the section 'Y' are calculated as

Hy = H – Hw where Hw=$\frac{C_{yw}}{R.L1}$

Where Hw is further defined below

SECTION Z - Hz for the section 'Z' is

Hz = H –Hx where Hx=$\frac{C_{xz}}{R.L2}$and L2 is transition length at exit

BETWEEN SECTION Z and W - After section "Z" till "TS" the versine are decreased by subtracting of the "Hv" per meter, where Hv=H/L2

SECTION W - The Versine "Hw" is obtained from formula

Hw = Operational constant value for Y and W (Cyw) /R.L2=$\frac{C_{yw}}{R.L2}$

The operational constant Cxz and Cyw are given in manufacturers manual and can also be calculated for different machines.

An example with calculations of various versines is given below:

Example 2.3.

Method of attending curve of Radius 583 m and transition length 70 m at both end by 09-32 CSM using 3-Point lining system.

For 09-32 CSM (from Annexure-2.9)

AB=6 m, BC=4.7 m, CD=10.05 m, AC=10.7 m, BD=14.75 m, AD=20.75 m

Here H =$BC.CD)/2R = \frac{23617}{R} = 40.5\ mm$

Hv= 40.5/L = 0.578 mm/m

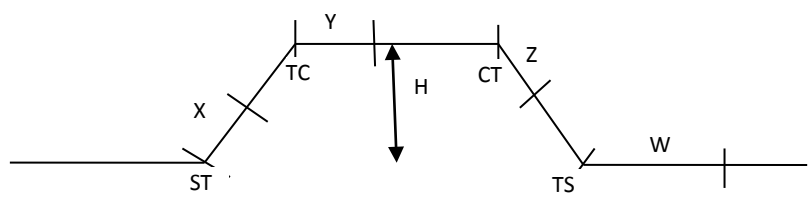

Length of X, Y, Z & W i.e. =BD=14.75

Versine for sections X, Y, Z and W									
Distance from ST, TC, CT &TS (in m)	*0*	*2*	*4*	*6*	*8*	*10*	*12*	*14*	*14.75*
SECTION X AND Z									
R. L	*40810 m*								
Constant for sections X & Z (Cxz)	*0*	*425*	*3399*	*11417*	*27191*	*53107*	*90534*	*135455*	*153120*
H x = Cxz/ R.L	*0*	*0.01*	*0.08*	*0.3*	*0.6*	*1.3*	*2.2*	*3.3*	*3.7*
Hz= H –Hx	*40.5*	*40.5*	*40.4*	*40.2*	*39.9*	*39.2*	*38.3*	*37.2*	*36.8*
SECTION Y AND W									
Constant for sections Y & W (Cyw)	*195238*	*148428*	*104167*	*65004*	*33489*	*12170*	*2362*	*48*	*0*
Hw = Cyw/ R.L	*4.8*	*3.63*	*2.55*	*1.6*	*0.8*	*0.3*	*0.06*	*0*	*0*
Hy = H –Hw	*35.7*	*36.9*	*37.9*	*38.9*	*39.7*	*40.2*	*39.9*	*40.5*	*40.5*

Here the operational constant value Cxz and Cyz are given by manufacturers after every 2 m, therefore the calculation of versine is for two meters interval. This may be calculated for alternate sleepers.

For portion between X and Y in transition, the versine at end of section X is increased at the rate of Hv per meter for the length of (transition length –chord length) where at the end it should be equal to versine at starting of section Y.

Distance from end ST	*14.75*	*24.74*	*34.75*	*44.75*	*55.75*	*65.75*	*70*
Distance from end of X(x)	*0*	*10*	*20*	*30*	*40*	*50*	*55.25*
Hxy=3.7+x.Hv	*3.7*	*9.5*	*15.3*	*21.0*	*26.8*	*32.6*	*35.7*

Distance from end CT	*14.75*	*24.74*	*34.75*	*44.75*	*55.75*	*65.75*	*70*
Distance from end of Z(z)	*0*	*10*	*20*	*30*	*40*	*50*	*55.25*
Hzw=36.8-z.Hv	*36.8*	*31.02*	*25.24*	*19.46*	*13.68*	*7.9*	*4.86*

For portion between section Z and W, the versine at end of section Z is reduced at the rate of Hv per meter for the length of (Transition –chord length), where at the end it should be equal to versine at starting of section W.

The calculation has been shown at 10 m intervals, which for practical purpose is calculated at every sleeper on interpolated accordingly.

Note: These values are to be written on sleepers to be fed in versine potentiometer in front cabin when front trolley is above that location.

(2) Curve without Transition.

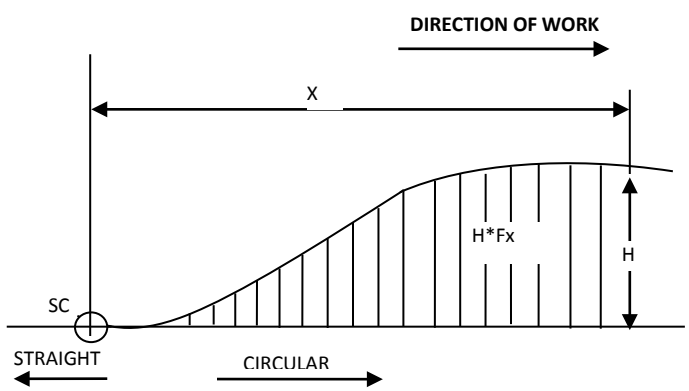

Fig. 2.27

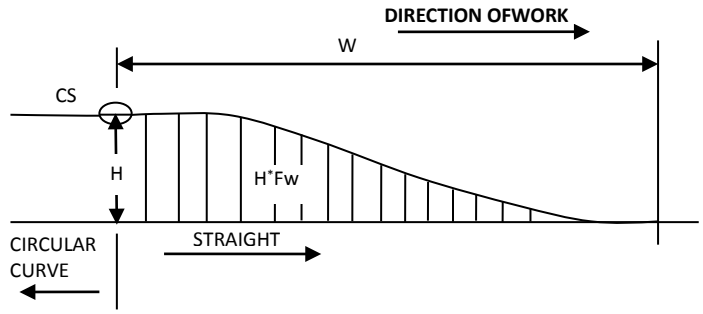

Fig.2.28

HFx= H. Fx

HFw= H.Fw

The versine H for the circular curve is obtained from formula

H = System constant value/ R

The operational constant Fx and Fw are given by machine manufacturers in their manufacturers manual.

215 Mode of Tamping using 3-Point Lining Method - The modes of tamping by 3-Point lining method for correcting curve are

(1) **3- Point Elementary Mode Lining –** In this mode, tamping is done on the basis of existing track geometry (theoretical/average) without conducting field survey for calculating shift (F_D) of curve and tamping is done using calculated versines H, Hx, Hy, Hz and Hw or HFx and HFw as applicable on the basis of theoretical or average track geometry (Preferably) as ascertained based on versine measurement for feeding into the machine manually.

In the machines with ALC, the track geometry parameters i.e. radius of curve, transition detail can be fed and the versine H, Hx, Hy etc. are calculated by ALC and fed to the machine

In this mode of lining, since front offset is not fed , curve is not brought to the any desired or designed location. Error is reduced but curve is not smoothened as front trolley error is reflected at correcting trolley position C.

(2) **3- Point Design Mode Lining –** In this mode, tamping is done to achieve targetted (desired/designed) track geometry. However, in addition, field survey of track to be attended is carried out in advance to ascertain the error (F_D) of existing track at different locations from desired or designed alignment. Here, calculated versines i.e. H, Hx, Hy, Hz and Hw or HF_x and HFw as applicable, on the basis of designed/desired track geometry and correction F_D for achieving this desired/ designed alignment is fed into the machine manually.

In the machines with ALC, the targetted track geometry parameters i.e. radius of curve, transition detail etc. and F_D required for target profile is fed (by creating a separate computer data file) and targeted versines H, Hx, Hyetc. are calculated by ALC and fed to the machine. F_D can alternatively also be fed through front potentiometer (front cabin).

The track is brought to the designed or desired target geometry and location based on target curve taken for calculating versine values and F_D.

(3) Measuring Run (with ALC) Lining Modes - In machines with ALC, measuring run for recording of the curve and correction to curve is done using 3-point mode. The targeted (desired) curve parameters (SE) including transition details etc. are decided based on recorded data and fed into ALC. The target versine at each location i.e. H, Hx, Hy etc. are calculated by ALC itself (after taking into account F_D at different locations) using desired target geometry and the measured curve data to correct curve accordingly.

Annexure 2.12 gives an example giving step wise procedure, to be followed for 3-point Lining.

216 Comparison between 3 Point and 4 Point Lining System:

3 Point lining method can be used for both straight and curve while 4 Point lining method should be used only for curves. The comparison of two methods is given below:

(1) 3-Point Lining elementary mode /4-point Lining Smoothening Mode

Table 2.4

S.No	3 Point Lining in elementary Mode	4 Point Lining in Smoothening/Compensation Mode
A	Versine of desired curve i.e. H, H_X , H_Y, H_Z and H_V etc. are calculated based on theoretical geometry of existing curve and chord length of machine. The calculated versine value is fed through versine potentiometer.	For circular portion of curve, machine measures versine at measuring trolley (H_2) and versine at lining trolley (H_1) is corrected on the basis of versine ratio. In transition, versine correction (Vm etc) are calculated based on theoretical/average geometry of existing curve and chord length of machine and is applied through versine potentiometer.
B	Since F_D is not considered, residual error is F_D /n_{3pt}. Depending on chord length, the value of n_{3pt} for machines working on Indian Railways is between 3 to 3.5. The residual error is thus F_D/3 to F_D/3.5 i.e. 33% approx.	Residual error here is F_D /n_{4pt}. The value of n_{4pt} is in between 6 to 7.5. The residual error is thus F_D/6 to F_D/7.5 i.e. 13 to 16% approx.

Note:

(i) The residual error in 4-Point lining in smoothening mode is less as compared to that in 3-Point lining in elementary mode. When curve is not measured in advance, the curve achieved based on the theoretical/average geometry may not be to the acceptable alignment.

(ii) In 4- point method, left over error at any station could influence the track alignment at next station. However, it is still desirable to use this method for smoothening of curve, as it reduces the station-to-station versine variation.

(2) 3 -Point Lining /4-point Lining in Design Mode

Table 2.5

S.No.	3 Point Lining in Design Mode	4 Point Lining in Design Mode
A	Versine of target curve i.e. H, H_X , H_Y, H_Z and H_V etc. are calculated based on desired or designed curve geometry and chord length of machine. The calculated versine value is fed through versine potentiometer. In addition slew values (F_D) are fed in the front tower in slew potentiometer.	For achieving targeted desired or designed curve geometry, machine measures versine at measuring trolley (H_2) and versine at lining trolley (H_1) is corrected on the basis of versine ratio. In transition, versine (Vm etc) correction calculated for targeted geometry is applied in addition by feeding these values through versine potentiometer. In addition to above slew values (F_D) are fed in the front tower in slew potentiometer
B	In machines with ALC, (i) The target geometry (design/desired) may be fed directly in ALC along with F_D to get that targeted alignment. (ii) Measuring run data can be used for deciding the desired curve alignment ALC considers correction F_D, calculated on the basis of measured run curve profile and targeted curve profile and is not to be fed separately.	In machines with ALC, The target track geometry may be fed directly and Vm correction is applied automatically based on radius and transition details.
C	Used with LASER system	Not applicable.

D	The curve can be brought to the designed or desired target geometry and location.	The curve here can be smoothened and brought to near designed alignment or desired alignment

Note:

(i) If the track is desired to be brought to the known position and geometry (designed alignment) using fixed references for F_D, 3- point lining in deign mode should be followed {refer para 213 & 215(2)}.

(ii) In absence of fixed references, it is advisable to use measuring run mode of tamping for achieving desired alignment {refer para 215(3)}.

(iii) In absence of fixed references and when measuring run is not feasible, desired geometry based on ROC calculation and corresponding F_D be used with or without ALC. {refer para 213 & 215(2)}.

(iv) 4-Point design mode should normally be used only when it is intended to smoothen the curve and bring it close to desired alignment.

217 Levelling of Track - Fixed type parallel chord levelling system is provided on all tamping machines. Longitudinal level of both rails and cross-level is corrected.

(1) Datum Rail and Cant Rail – For correcting longitudinal profile, one of the rails is selected as datum (base) rail and other as a cant rail. Machine corrects datum rail and maintains cross-level on cant rail (other rail in case of straight track) with reference to datum rail. Datum (base) Rail should be selected as under:

- On curves- inner-rail.
- On straight track in double line-less disturbed rail, which is generally non-cess rail.
- On straight track in single line and straight middle track in multiple lines section- higher/less disturbed rail.

(2) Selector Switch –In tampers supplied by Plasser India, Cant Selector Switch is provided to select cant rail, which is kept opposite to the datum rail (base rail). In Russian Tamper, datum Selector Switch is provided for selecting datum Rail.

218 Levelling and Lifting System

(1) Equipment –It consists of two chord wires one for each rail, stretched tightly from Front tower (F) to Rear tower (R). Tamping machines rectify level defects in track by lifting it with reference to these levelling chords. Height transducers are mounted on middle feeler rods (M), which rest on track in between lifting unit and tamping unit. Both rails are controlled separately. Pendulums are provided between left and right feeler rods to keep both chords parallel and also measure cross level.

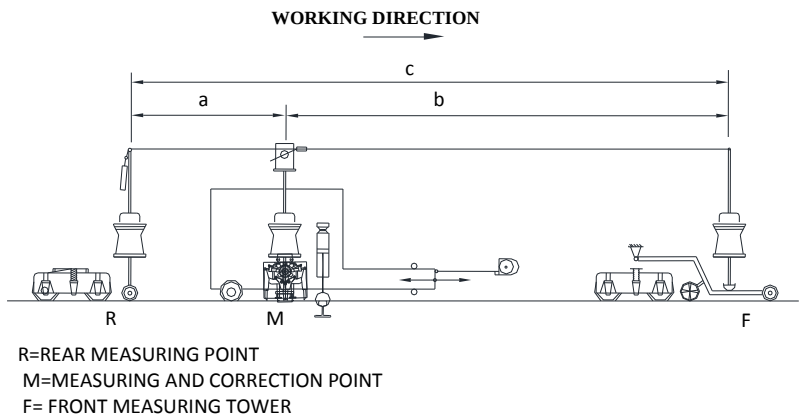

Fig. 2.29

(2) **Working –** Height transducers provided on middle feeler rod measures the gap between its zero level and chord wire. Datum rail is lifted to eliminate this gap and other rail (cant rail) is lifted to bring specified cant between two rails, which is kept zero in straight track and equal to super elevation value on curved track.

(3) **Reduction Ratio–** In levelling process, front tower always remains on unlevelled track and rear tower on levelled track. Because of level defects at front tower location, the front end of the chord goes out of its correct position equal to level offset at that point. Due to incorrect position of the front end of chord proportional level errors remain after levelling.

Thus, the levelled track at M is having

Level error = $\boldsymbol{LF.\frac{a}{a+b} = LF\ (Y)/r}$

Where,

LF = Level offset (Y) at front tower

r (reduction ratio) = (a+b)/a

(4) **Reduction Ratio of Various Machines –**Various machines have different reduction ratio (c/a) for lifting. Values for some of the important machines are:

Table 2.6

Bogie Distance (m)	**08-275 UNIMAT**	**08-275-3S UNIMAT**	**09- 32 CSM**	**UNIMAT Compact(MPT)**	**T-Express (09-3X)**	**08-32C Duomatic**
RM(a)	3.32	4.85	3.90	5.10	4.56	5.3
MF(b)	8.89	10.73	8.90	9.05	10.67	9.35
RF(a+b)	12.21	15.58	12.80	14.15	15.23	14.65
Reduction Ratio (r)	3.678	3.212	3.232	2.775	3.333	2.764

219 Mode of Working for Levelling - Tamping machine corrects the levelling error in following two modes.

(1) Smoothening or Compensation Levelling Mode- In this mode, long level defect of track is not surveyed and general lift over the datum rail based on short wave defects is generally fixed (fed through potentiometer in front cabin) and the longitudinal level of track is smoothened accordingly. Longitudinal level is not completely corrected and thus some residual error (F_R) remains.

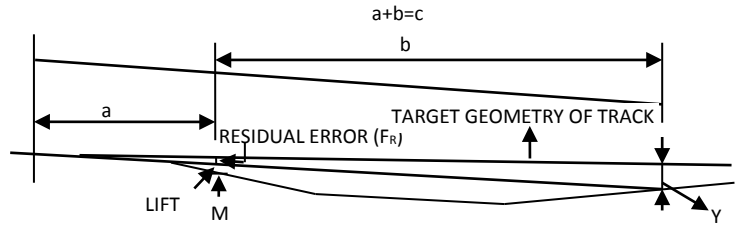

Fig. 2.30

Only short wave defects, within the base of the machine can be smoothened. Super elevation in curve & correction value **X** & **K** (discussed at para 222(2) & (3)) are fed in addition. In the **machines with ALC**, the general lift and curve detail (design or desired as decided for alignment correction) may be fed through ALC in advance and the ALC will automatically adjust cant value fed and distribute SE in transition length.

In machines with CMS, the general lift, ramp in and ramp out is displayed on its screen.

(2) Design or Precision Levelling Mode – In this mode instead of general lift, the lift value (Y) for achieving target level based on field survey are fed through general lift potentiometer over the datum rail to rectify 100% error. All long wave and short-wave defects can be completely removed. Super elevation in curve & correction value **X** and **K** are fed in addition.

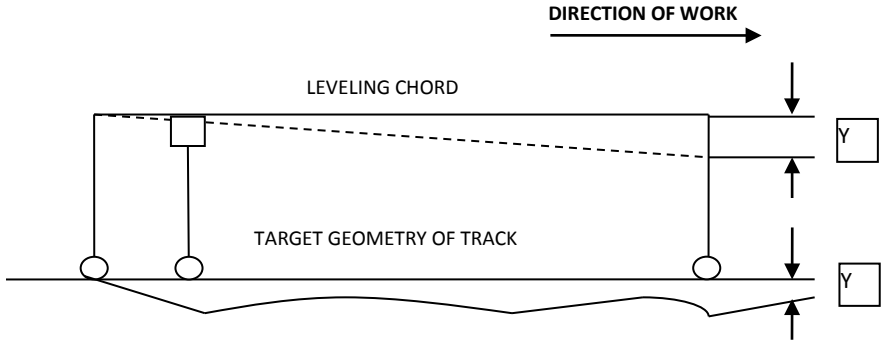

Fig. 2.31

In the machines with ALC, the target lifting value can be fed through ALC by preparing a data file or by writing them on sleepers. While working on curve, the radius, super elevation and transition length of targeted

desired/design curve can be fed in advance and the ALC will automatically adjust cant value fed and distribute SE in transition length.

Note: Lift values at every location are to be written on sleeper to be fed in general lift potentiometer in front cabin when front tower is above that location.

(3) Measuring Run (ALC) Levelling Mode (for level on machine chord length)

In machines with ALC, measuring run recording of the tangent track and curve can be done. The level of track is measured on levelling chord and is smoothened by eliminating different peaks and dips. However, long wave defect is not eliminated. In curves, after deciding targeted level and SE in circular portion the cant is distributed along the transition. In case additional lift of track is required, the minimum and maximum lift limits can be changed in ALC and track will be smoothened accordingly.

220 General Lift - It is the amount of lift, given to cover all undulations, for datum rail. The other rail is then lifted to maintain cross-level/super-elevation as required with reference to corrected datum rail.

(1) Deciding General Lift –The lifting of the track is decided based on the magnitude of the dips/peaks in the track. The target level for the datum should be such that it is always higher than the largest of dips, as ascertained by P.Way supervisor in advance, duly increased by a value of at least 10 mm at high points to achieve a uniform top surface of rail.

Therefore, the amount of lift, to be applied to datum rail, will be the algebraic difference of higher and lower point of Datum rail + 10 mm. Dips and peaks are decided on preliminary survey of Datum rail in chord equal to machine chord length (15 m) approximately for eliminating short wave defects. However, for straight track where datum is lower than other rail, it should be more than maximum cross level difference.

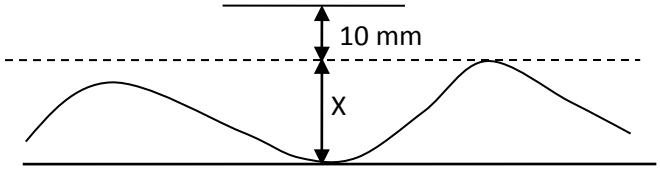

GL= x+10 mm

Fig. 2.32

(2) Quantum of General Lift –However, while fixing the target level, for datum rail, care should be taken to make sure that total lift value does not exceed 50 mm at any point on Datum rail. If more than 50 mm lift is required, it should be undertaken by in two passes of tamping machine. If lifting required is more than 30 mm but less than 50 mm, double insertion in the

same pass tamping should be done, minimum lift at any location should be 20 mm for effective tamping.

(3) **General Lift on Curves –** For Curves, when the existing super-elevation (SE) is less than equilibrium SE, general lift will be equal to track irregularities over the datum rail (inner rail + 10 mm) and when the existing SE is more than equilibrium SE, general lift will be the track irregularities in the datum rail plus max difference between existing and equilibrium SE

221 Ramp in Ramp out

(1) **Value of Ramp –**While giving the general lift, ramp in of 1 in 1000 and also while closing the work ramp out of 1 in 1000 should be given to the track for smooth transition.

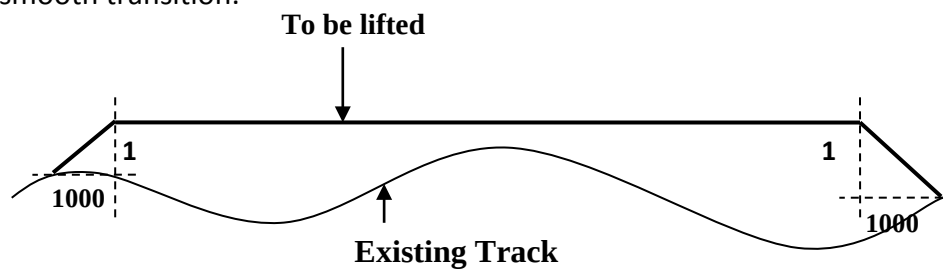

Fig. 2.33

(2) **Method of Ramping –**Method of ramp in and ramp out and closing and opening of two successive blocks.

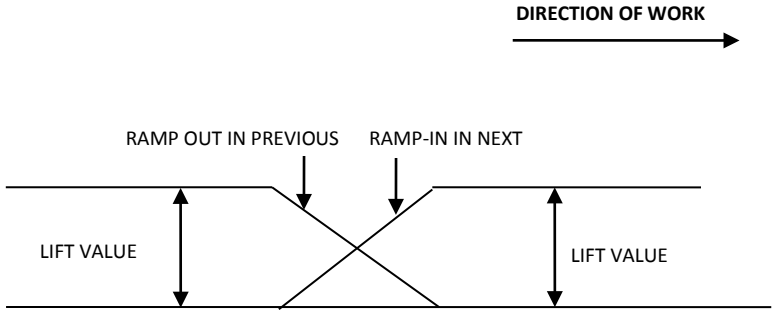

Fig. 2.34

(3) **Feeding of Ramp Values –**The principle of feeding lift for front tower (ramp in) is shown below:

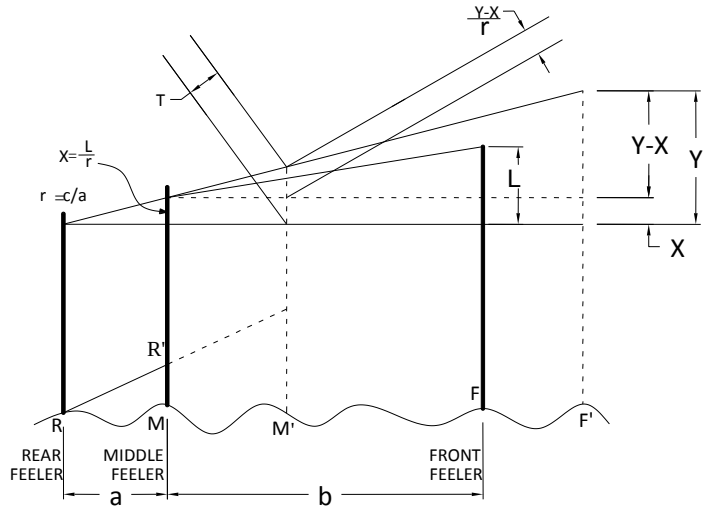

Fig. 2.35

$$\frac{L}{X} = \frac{c}{a} = r\ (reduction\ ratio)$$

As this machine is ahead to next position and suppose a lift of Y has been given to the front cabin. Total actual lift at lifting point (M) can be written

$$T = X + \frac{Y - X}{r}$$

In other words if T is the lift required at any position, the Y value at front tower would be

$$Y = (T - X).r + X$$

An example for ramp in and ramp out calculations is attached as **Annexure-2.13**

In machines with ALC, general lift value and ramp gradient is fed through it directly. In machines with CMS, general lift, and ramp gradient is displayed on screen

222 Input of the Lifting and Cant Values - In machines like CSM, Tamping Express and UNIMAT-4S, the cross level is entered in the working cabin at location M. In other tampers it is fed in front tower (F).

The adjustment of the track lifting value (general lift/target height) is fed at the front reference (front cabin) point F manually or automatically. Proportional value is transmitted to electronic control and measuring transducer mounted on the middle feeler rod (M), which measures existing longitudinal level. Lifting of track is done till the difference becomes zero.

(1) **Method of Feeding of Cant in Curves –** In machines designed for feeding cross level through front cabin i.e.at F, following steps are to be followed:

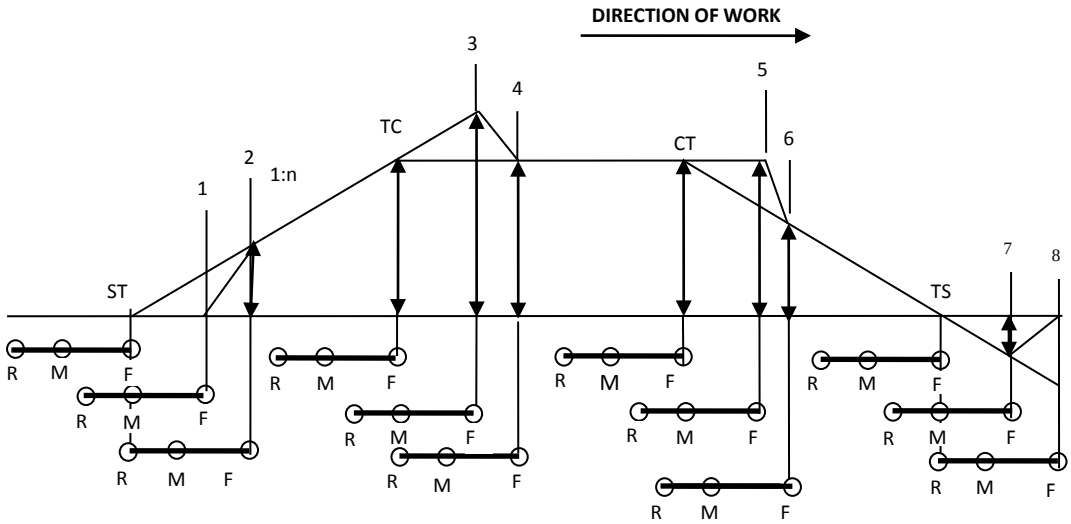

Fig. 2.36

(a) Total cant value should be distributed throughout the transition length in such a way that it is zero at **ST** & **TS** and maximum at **TC** & **CT**.

(b) Select higher rail as a cant rail.

(c) Do not feed super elevation when front F reaches at **ST**. Start increasing SE value from zero when M reaches ST. At this F is distance "b" (distance between M and F) away from **ST**.

(d) Cross level (XL) feeding at F, from there is increased at a uniform rate so that by the time R reaches ST, the desired value of SE at the position of M is achieved. Cross level (XL) feeding at F is accordingly adjusted and will normally be at rate more than the cant gradient.

(e) XL value from there and is increased at a uniform rate i.e. at cant gradient till M reaches TC and full SE is achieved there. The value of XL fed at F would be more than SE at this position as is seen above.

(f) Value of XL feeding at F is now decreased at uniform rate from there to make it equal to SE in a distance of "a" (distance between R and M).

(g) XL fed in F equal to SE shall remain constant over the circular curve and beyond until M reaches at CT.

(h) At this point start reducing XL till R reaches CT i.e. in a distance of "a" and the value at M and F should be as required there.

(i) XL at F is further reduced at a uniform rate equal to cant gradient, till M reaches TS. The value of XL in F at this position would be negative.

(j) Beyond this the negative XL at F is increased to Zero in a distance of "a" i.e. till R reaches TS.

In machines like CSM, Tamping Express and UNIMAT-4S, in which cross level is entered in the working cabin at location M, the actual cant value at M is entered and additional feed of cant through ± 10 mm potentiometer may also be required to be fed in front tower. In latest model machines, provided with encoders, additional feeding through ± 10 mm potentiometer is not required. In most of such machines, the ± 10 mm potentiometer is not being provided at all.

If the galvanometer does not come to zero position (desired cant is not achieved), additional correction required to bring it to zero, is to be fed through ±5 mm potentiometer in working cabin at M.

(2) **Correction (K) in Cross-Level to be fed due to error created by Curvature –** While working in curve, both the levelling chord shifts inside. Also the height transducer gets tilted thus causing extra lift equal to K beyond general lift or lift value Y fed. Therefore, to achieve the desired level of track the general lift/lift value, will have to be reduced by value called correction "K".

(a) Correction value "K" is fed while working in curve and is equal to

$$\boldsymbol{K = \frac{Constant.SE}{R}}$$

(b) The correction value "K" depends on radius, super elevation and gauge of the track. The constant varies from machine to machine. The K value is deducted from the amount of general lift/lift to be given in the front tower. The K value distribution is given in below.

(c) Value of K correction, depending on curvature, gauge and super elevation, for any machine is supplied by manufacturer in the instruction manual. A sample is enclosed as **Annexure 2.14.**

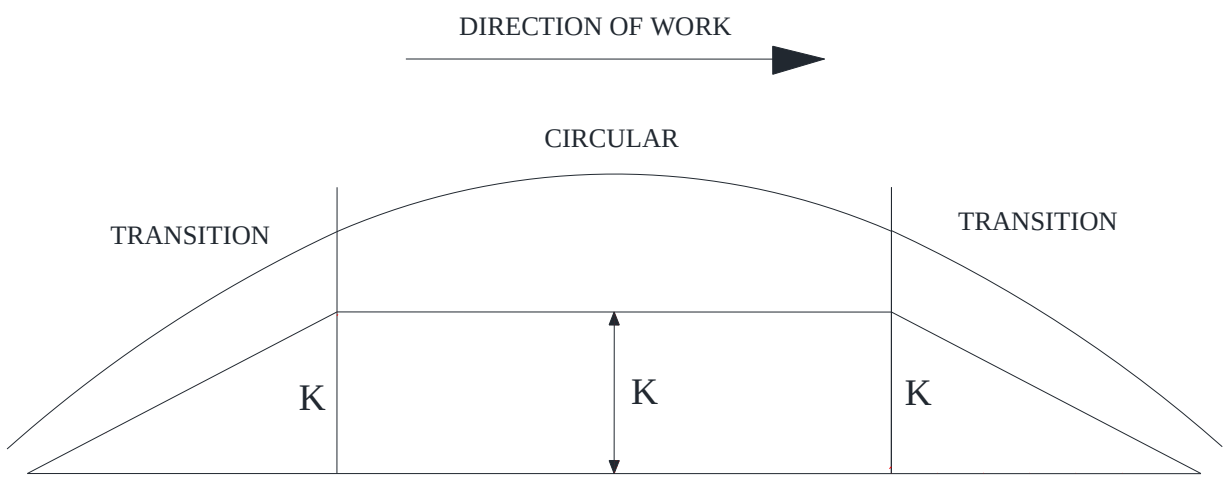

Fig. 2.37

(3) **Attention to Vertical Curve –** The levelling chord and track profile are not parallel when machine works in vertical curve. The requirement of lift is either more or less than that given by machine in case of summit and valley curve respectively. To account for the same, general lift/lift value is adjusted depending on type of curve. Accordingly, additional correction value "X" is applied to general lift/lift value as below

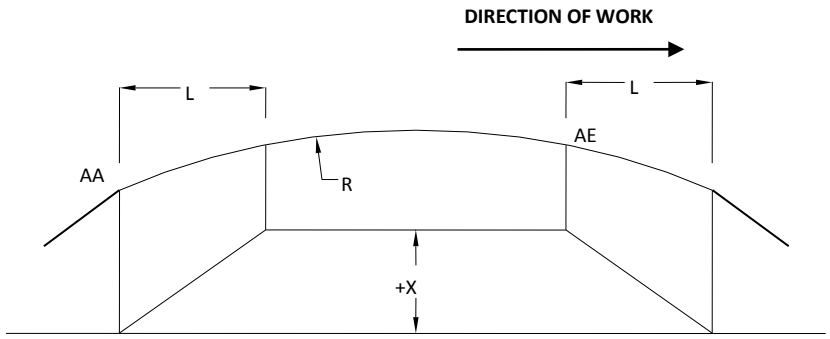

Fig. 2.38

(a) **For Summit Curves–** X' value starts from beginning of summit (AA) as shown in Fig 2.38. The value of 'X' gets added to the existing lifting value & reaches maximum when the complete levelling chord is on the vertical curve. The value 'X' reduces from end of summit (AE) and becomes zero at the point so that the complete levelling chord is out of vertical curve. L is levelling chord length.

(b) **For Valley (sag) Curves –** If the vertical curve is as below then 'X' value starts from beginning of valley (AA) as shown in Fig 2.39. The value of 'X' gets subtracted to the existing lifting value & reaches maximum when the complete levelling chord is on the vertical curve. The value 'X' reduces from end of valley (AE) and becomes zero at the point so that the complete levelling chord is out of vertical curve. L is levelling chord length.

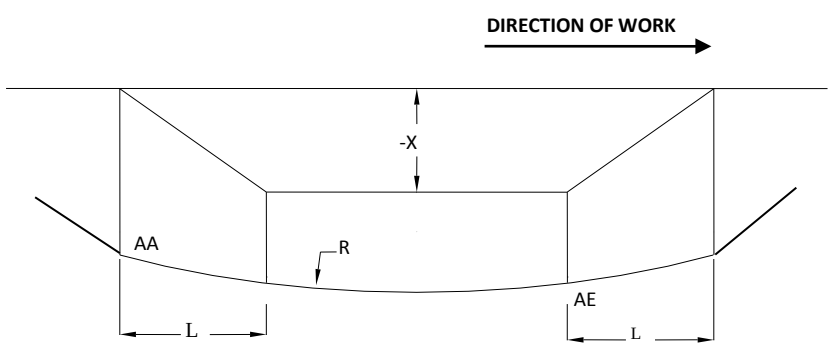

Fig. 2.39

(c) The value of X for different vertical curves are given by machine manufacturer, One sample is enclosed as **Annexure 2.15.**

223 Survey and Working of Tamping Machines in Design Mode - The Guidelines for survey of track (for getting F_D and Y), and operation of tie tamping machines in Design mode is given in **Annexure 2.16**. The methods of operation including feeding of requisite data in various modes of tamping are given in **Annexure-2.12**.

224 Works required Before, During and After Tamping

(1) General - Activities/works to be done before, during, and after tamping are elaborated in following paragraphs. In addition to the above, areas needing special care in respect of various machines are also brought out.

(2) Preparatory Works for Introduction of Tamping Machines for Plain Track and Turnouts - Before undertaking through maintenance tamping of plain track and/or turnouts, advance planning and fulfillment of pre-requisite are necessary to ensure quality work and increased retentivity of tamping. Action as detailed hereunder shall be taken and a detailed project report prepared duly incorporating location specific needs, if any.

(a) A field survey should be carried out to

(i) Determine existing profile of track including availability of clean and total ballast cushion, to decide the extent of lift and assess ballast requirements.

(ii) Take census of hogged and battered joints, if any, which may require end cropping or reconditioning etc.

(iii) Take census of broken and damaged sleeper on plain track as well as in turnouts.

(iv) Make assessment of the extent of cess repairs required.

(b) A minimum clean ballast cushion of 150 mm below the bottom of the sleepers, at rail seat location, is recommended for quality output and retentivity of tamping by the tamping machines. For new line, doubling, gauge conversion etc. the total (clean) cushion before undertaking tamping by machine should be at least 250 mm (on main line) and 150 mm on loop lines/siding.

(c) Availability of adequate ballast should be ensured in shoulders and cribs to allow required lift as per proposed vertical profile as per the relevant provisions in the **Indian Railways permanent Way Manual** (with all correction slips) and **Indian Railways Schedule of Dimensions** (with all correction slips) and to maintain ballast profile as per IRPWM after tamping work.

(d) Track drainage should be improved and pumping locations should be attended. Rounded ballast in these locations should be replaced with

clean and angular ballast. For aforesaid objectives planning and execution of deep screening of ballast, if required, training out of ballast, and cess repair works should be done well in advance.

(e) All broken and damaged sleepers should be replaced including those in points and crossings.

(f) Necessary attention to hogged/battered joints is given, as required, by end cropping or reconditioning etc.

(g) Permanent reference pillars for alignment as discussed in **Annexure 2.16** should be marked.

(h) In case of tamping on turnouts, sufficient length of approach track, taking into account the special track features on either side should also be planned for tamping. In case of the turnout leading to loop line, the turn in-curve shall also be tamped along with turnout.

(3) **Pre-tamping Works -** The following preparatory works shall be completed before undertaking tamping of track

(a) Another round of field survey should be carried out just before deployment of tamping machine to update the existing profile of track and rework proposed track profile as per guidelines detailed in **Annexure 2.16.** The time gap between this field survey and actual tamping machine working should be minimum.

(b) In case the permanent reference pillars have been installed and documented, the slew and lift data can be used directly.

(c) Alternatively the measuring run facility (ALC) of tamping machine, if available, should be used for surveying the existing track profile and determination of proposed track profile during the block itself just before commencing tamping operation.

(d) The beginning and the end of curve/transition curves should be written conspicuously on sleepers. In addition various parameters mentioned below (as shown in the sketch) should be written on every alternate/every third sleeper for use of the operator for feeding.

(i) For straight track–slew (F_D), lift (Y) values for designed longitudinal profile.

(ii) For horizontal curves–slew (F_D), versine compensation (V_m/F) values (in 4 point lining system) or versine (H, Hx, Hy, Hz, Hz, Hw) values (in 3 point lining system) Super-elevation and lowering values (K correction), lift (Y) values for designed longitudinal profile.

(iii) For vertical curves–correction values for vertical curves (X correction).

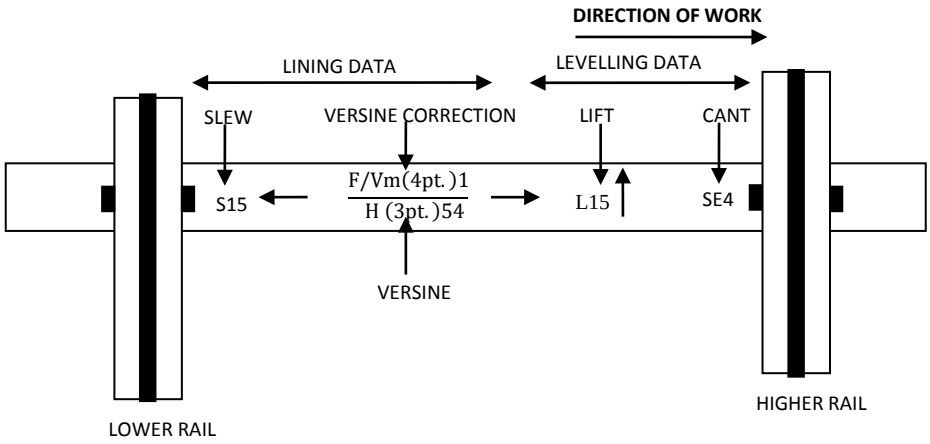

Fig. 2.40

(e) Ballast should be heaped up in the tamping zone to ensure effective packing. However, sleeper top should be visible to the operator and the ballast must not obstruct the working of lifting rollers.

(f) Necessary attention to all remaining hogged/battered joints, as required, is given.

(g) All cup joints, if any, should also be attended.

(h) Deficient fittings and fastenings should be made good and all fittings and fastenings like fish bolts, keys, cotters, loose-jaws, elastic rail clips etc. should be properly tightened. Worn out fittings and rubber pads should also be replaced.

(i) Sleepers should be squared, uniformly spaced and the gauge corrected.

(j) De-stressing of rails, adjustment of creep, expansion gaps in joints and SEJs etc., if necessary, shall be carried out.

(k) Guard-rails at the approach of girder bridges and on ballasted deck bridges shall be removed temporarily.

(l) All obstructions such as rail lubricators, signal rods & bonds, cable pipes, axle counter etc., which may obstruct the tamping tools should be removed temporarily. In case it is not possible to remove, these obstructions should be clearly marked and made known to the operator before the start of the work.

(m) Wooden distance blocks (pieces) on platform lines, wooden blocks and joggled fish plates etc. shall be removed temporally ahead of tamping & J-clips therein shall be replaced with proper liners and ERCs.

(n) In electrified sections, the earth/structure /cross bonds should either be removed temporarily or properly adjusted for unobstructed tamping.

(o) Level crossing shall be opened and check-rail shall be removed temporarily ahead of tamping machine.

(p) Suitable speed restriction as per the policy guidelines issued by Railway shall be imposed, if existing Joggled fishplates are removed before packing. This speed restriction shall be relaxed only after re-fixing Joggled fishplates.

(q) For **turnouts,** following works should be done in addition

(i) Complete layout including spacing of sleepers as per relevant drawings shall be checked and corrected, if required.

(ii) The broken/battered or worn nose of the crossing should be either replaced or reconditioned, as necessary.

(iii) Ensure that all broken/damaged sleepers, if any, in crossing portion have been replaced.

(iv) High points on the turn out and approaches should be determined and general lift should be decided. General lift of minimum 10 mm must be given.

(v) A joint inspection by SSE/TM and SSE/P.way shall also be carried out to ensure that pre-requisite and preparatory work, to achieve high quality work by machine, are ensured.

(r) Co-ordination with other Departments:

(i) **Operating Department**: for planning and arrangement of sufficient line blocks to ensure optimum use of tamping machines.

(ii) **Electrical Department**: for availability of OHE staff, as required.

(iii) **S&T Department**: for availability of signal staff and making communication arrangements, as required.

(4) Operations During Tamping - The following points should be observed by the SSE/JE/TM and the SSE/JE/P.Way:

(a) The tamping machine should work in design mode only, except for initial round of tamping at worksite. DTS shall be deployed to work behind the tamping machine in the same block.

(b) The tamping (Squeezing) pressure should be adjusted according to the type of sleeper as sleeper as given in Para 206(1).

(c) The gap between top edge of the tamping blade and the bottom edge of the sleeper in closed position of the tamping tools should be adjusted depending upon the type of rail and sleepers. The gap for different types of sleepers should be as given in para 206 (2).

(d) During tamping the squeezing time should be kept as specified in Para 206 (5) Lower squeezing time should be chosen for ballast in un-

consolidated/partially consolidated conditions. Higher squeezing time may be required for track with caked up ballast.

(e) The machine should have full compliments of tamping tools. The tamping tools should not be loose or worn out. The wear on the tool blade should not be more than that specified in Para 206 (6).

(f) Care should be taken to ensure that tamping tools are inserted centrally between the sleepers into the ballast to avoid damage to sleepers. The number of insertions of the tamping tool per sleeper varies with the type of sleeper and the amount of track lift to be given as per Para 220(2). One additional insertion should be given for joint sleepers.

(g) For LWR/CWR track, the relevant provisions of. LWR manual shall be adhered to.

(h) Ramp in and Ramp out to be provided as per Para 221.

(i) If work is to be done during night, sufficient lighting at work site should be ensured.

(j) Correct feeding of relevant values – F_D, Y, Vm, F, H, K, X shall be ensured, while working in manual mode.

(k) During tamping, the parameters of tamped track should be checked immediately after tamping for cross level and alignment and necessary corrective action should be taken.

(l) **For Turnouts**

(i) Ensure that sufficient length (at least 50 m) of approach track, taking into account the special track features, on either side are also tamped in continuation.

(ii) For turnouts in quick succession, without sufficient length in between, adequate line block shall be planned to tamp adjacent turnouts together.

(iii) S&T connections and stretcher bars shall be removed.

(iv) While moving the machine over the switch after tamping on main line portion, either leading or first following stretcher bar is connected for safe movement of machine over switch.

(v) For tamping of turnouts, main line portion is to be tamped first. Sequence of tamping is given in **Annexure 2.17**.

(vi) In case of diamonds (with/without slips), direction of more traffic should be tamped first as shown in **Annexure 2.17.**

(vii) While tamping mainline portion, the additional lifting arrangement, provided in the machine (UNIMAT-3s), lifts the turnout side rail also. Therefore the lifted end of sleepers on turnout side should be adequately supported on wooden

wedges, or using non-infringing jacks under rails, till these sleepers are tamped by machine. In latest model (UNIMAT-4s), tamping of sleeper support under third rail can also be tamped.

(viii) In case of the turnouts leading to loop line, the turn in-curve shall also be tamped in continuation.

(m) It should be ensured that S&T and electrical staff are associated during the work.

(5) **Post Tamping Operations -** The Section Engineer (P. Way) shall pay attention to the following items:

(a) Checking and tightening of loose fittings.

(b) Replacement of broken fittings.

(c) The ballast shall be dressed neatly as per IRPWM profile. Proper consolidation of ballast between the sleepers shall be done manually in case Tamping machine is not followed by DTS.

(d) Actual output of the work done, shall be compared with reference to rated output. Analysis and monitoring of ineffective time shall be done.

(e) Any unusual occurrences shall invariably be reported to M/C control & Engineering Control along with loss of working time, if any.

(f) Final track parameters on straight track as well as main line on turnouts should be recorded with the help of recorders provided in the tamping machine or by optional equipment like Data Recording Processor (DRP) or by separate run of track measuring trolleys etc. The machine should, after tamping, be able to achieve track geometry generally to category A standards, but in no case lower than category B limits specified in IRPWM.

(g) A copy of this record should be kept with the Section Engineer (P. Way).

(h) If the recorder is not available, then gauge and cross level at every 5th sleepers of tamped track should be recorded.

(i) In addition, the versines and super-elevation of curves shall also be recorded.

(j) While working in LWR territory, the provision of Manual of Instructions on Long Welded Rail (with all correction slips) should be followed.

(k) The fixtures like checkrails etc. removed during pre-tamping operation should be restored.

(l) Guard rails removed during preparatory work should be restored.

(m) Distance blocks on platform lines, joggle fishplates, OHE bonds, signaling rods/bonds & cables pipes shall be put in place and fittings shall be tightened.

225 Dynamic Track Stabilizer (DTS)

(1) **General –** During maintenance operations such as tamping, lifting, slewing, deep screening etc. the lateral resistance of track gets reduced which rebuilds gradually with passage of trains. This consolidation can also be achieved faster, uniformly and more effectively by means of a Dynamic Track Stabilizer.

(2) **General Layout –**The general layout of Dynamic Track Stabilizer are given below:

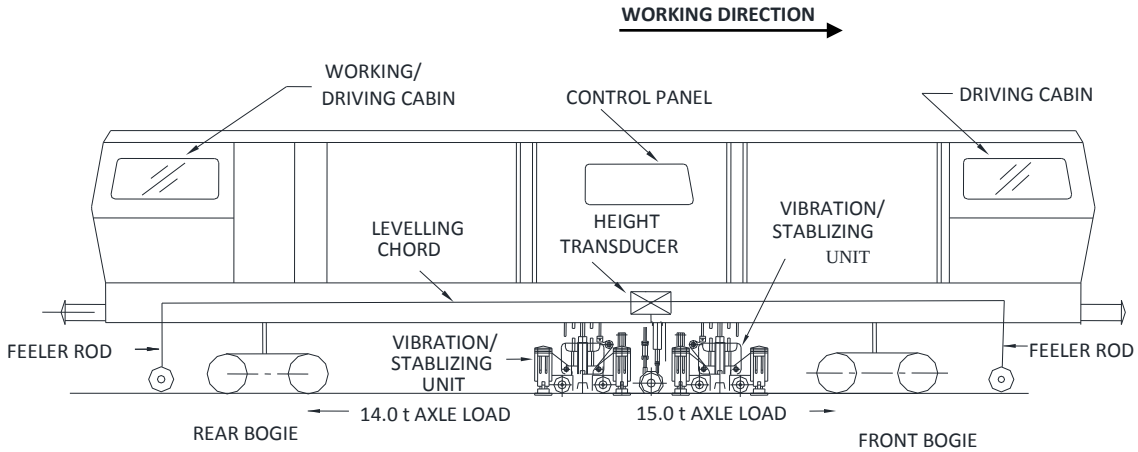

Fig. 2.41

(3) **Advantages of DTS -** Consolidation by the DTS has the following major advantages:

(a) Elimination of initial differential settlements, which are caused by the impact of passing trains.

(b) The track geometry achieved by tamping machines is retained for a longer duration as consolidated structure of ballast bed is built up.

(c) Lateral track resistance increases resulting in enhanced safety against track buckling.

(d) Speed restrictions can be relaxed earlier.

(4) **Brake System**

Following types of braking system are provided on machine:

(i) **Direct Brake**- It is applied only on machine during transit.

(ii) **Indirect Brake-**This brake is used for application on machine and coupled camping coach/ wagon while running. This brake system is provided in machines with KE valve. KE valve is available in all new tamping machines. It works with single piping system.

(iii) **Emergency Brake-** This brake is applied on machine during transit alone or coupled with camping coach/wagon only when KE valve is in 'on' position. It is applied through indirect brake system.

(iv) **Safety Brake-** This brake is applied automatically by switching off hydrodynamic transmission gear (ZF Gear in Plasser machines). This should not be normally used as service braking system.

(v) **Parking Brake-** This is hand operated mechanical brake, applied when machine is stabled.

226 Working Principle of Dynamic Track Stabilizer

(1) Mechanism of DTS – Heavy dynamic consolidating units are pressed firmly against both rails by hydraulic pressure. Flywheels produce a horizontal oscillations (some of machines use vertical oscillations also) directed laterally to the track, which together with a vertical load is transmitted onto the track and subsequently to the ballast bed. The dynamic effect of directional oscillation causes the sleepers to be "rubbed into' the ballast bed and produces a "flowing movement" of the ballast which get denser by filling of the voids.

This compaction causes not only a controlled and uniform settlement of the track but also an enhanced friction between sleeper and compacted ballast bed, thus increasing lateral track resistance.

The oscillation frequency is adjustable. The impact by the dynamic force and simultaneously applied static force are important aspects of functioning of DTS. Hydraulic cylinders attached between the machine frame and the consolidating units apply vertical static loads on both rails. The vertical load helps in maintaining firm contact between the consolidating units and the track for transmitting the oscillation. The vertical static pressure is also adjustable.

(2) Levelling System in DTS – DTS is equipped with a levelling system, which prevents the longitudinal, and cross level values achieved after tamping from varying due to differential settlement of various segments of track during operation of DTS. The transducers of the longitudinal level and the cross level measuring system recognize the tendencies towards formation of faults of this kind and influence the load control with their measuring signal via the automatic governor, thus counteracting the tendency of propagation of the faults.

(3) Speed of Working of DTS – The speed of working can be controlled by an adjustable hydrostatic drive. If the track geometry is corrected by several passes of the tamping machine, then a low speed of working of 0.5 kmph to 1.0 kmph is selected for first and second passes of the machine. For subsequent passes, higher working speed is selected.

(4) Stabilization Achieved by DTS- It is possible to permit speed of 40 kmph on

freshly deep-screened tack, if ballast is adequate and Dynamic Track Stabilizer has been used behind the tamping machine.

227 Modes of Working of Dynamic Track Stabilizer - The machines are capable of working in following two modes

(1) Maximum Settlement/Constant Pre Load Mode (i.e. Levelling system-OFF)– In the this mode of working, the machine works to achieve higher consolidation through maximum pressure (vertical load)and thus larger settlement, however, the settlement achieved in this mode of working is usually irregular, though the consolidation level of ballast bed is high.

(2) Controlled Settlement/Variable Pre Load Mode (i.e. Levelling system-ON) – In this mode of working, the DTS machines are capable of settling the track in a controlled manner while maintaining the track geometry, both longitudinal and cross level. A settlement value is preselected (around 30% of lift during tamping)and the pressure (vertical load) in the long cylinders is controlled by levelling system. In some machines measuring and control system has been installed which can remove any residual fault in track geometry.

228 Types of Dynamic Track Stabilizer - There are three make of DTS machines in use over Indian railways

(1) Types of DTS

(a) DTS 62N (Plasser India).

(b) DTS VKL-404IN (BHEL, India).

(c) DTS DSP-C8T (METEX -JSC, Moscow Russia).

(2) Salient Features of Different DTS –The important dimensions of the machines are given at **Annexure 2.18**. Salient features and technology used in different machines are given below:

Table 2.7

S.No.	Feature	Plasser's DTS – DGS-62N	BHEL's DTS – VKL-404IN	METEX's DTS – DSP-C8T
1.	Bogie	One bogie is powered bogie for travel drive and both bogie serves as powered bogie for working drive	One bogie is driving and second is idle. The driving bogie is equipped with two traction motors.	One bogie is driving and second is idle during running. However, during working, both bogies are powered.
2.	Stabilizing Units	Has, two stabilizing units. Each stabilizing	Has, two stabilizing units. Each stabilizing unit	Three stabilizing units located at the middle part of the

		unit consist of a frame with 4 running rollers with flange inside, a horizontal running guide rollers per rail and the vibration drive unit. The running rollers are pressed against the railhead from inside during the vibration process and the horizontal guide rollers from outside. The stabilizing units are designed that only horizontal vibration occurs by means of a cardan shaft.	consists of a frame with 4 running rollers. The stabilizing units are designed that only horizontal vibration occurs by means of a cordon shaft. The rollers are so designed to enables the work in the turnouts. The roller balances are equipped with the blades, which guide the rollers through the crossing.	machine. Each stabilizing unit consists of a frame with 4 guide rollers. The guide rollers are pressed against the railhead from inside during the vibration process Vibration units drive is carried out by hydro motors and cordon shaft. Both horizontal and vertical vibrations are produced.
3.	Vibration frequency	0-45 Hz (Favorable range 32 to 37 Hz)	0-40 Hz (Favorable range 32 to 35 Hz)	40-49 Hz (Vertical vibration) (Favorable range 40 to 45 Hz) 20-22.5 Hz (Horizontal)
4.	Working speed	0-2.5 Kmph	0-3.0 Kmph	0-2.5 Kmph
5.	Vertical preload	240 KN MAX. (120 KN on each stabilizing unit)	240 KN MAX (120 KN on each stabilizing unit)	320 KN MAX. (106.6 KN on each stabilizing unit)
6	Leveling System	The measuring system of the leveling device works on the principle of three	No Leveling System	The measuring system of the leveling device works on the principle of four

		point system.		point system.
7	Working Mode	There are two working modes: i) Controlled Settlement mode. ii) Maximum Settlement mode	There are also two working modes: i) Constant Drop Mode CDM. ii) Constant Thrust Mode CTM	There are two working modes: i) Levelling mode which is computer controlled ii) Constant Vertical Preload
8	Max Drop Value	10 mm (Leveling mode)	In constant thrust mode –CTM-10 to 50 mm In constant drop mode-CDM-5 to 10 mm	Up to 20 mm (Leveling mode)

229 Working of DTS

(1) **General –** The machine should be used in maximum settlement mode at renewal or deep screening sites. On maintenance site, it should be used in controlled settlement. Track should be consolidated by DTS following the tamping machine in the same block, to ensure faster and uniform consolidation.

(2) **Precautions in DTS Working** – The following extra precautions are necessary in the operation of this machine:

(a) Complete and tight fittings to hold rails with sleepers are essential.

(b) Adequate pre-depositing of ballast for achieving the required profile is necessary.

(c) The vertical pre-load is to be selected, if the levelling system is used, in such a way that the determined maximum settlement is not exceeded.

(d) The selection of frequency (depending on track condition), working speed and vertical pre-load should be judicious according to the needs and with/without “Levelling” system in “ON” condition. The frequency to be properly set when the machine appears to be in smooth behaviour i.e. the vibrations are transmitted to the track and not back to the machine.

(e) When **stabilizing track on bridge with ballasted deck**, there are chances of resonance if applied frequency matches with the natural frequency of the bridge. The natural frequencies of bridges with span over 10 m lies below 30 Hz. Therefore, normally higher frequency of

40-45 Hz shall be selected when working on bridges. When working on major or important bridges, sufficient staff should be deputed to observe the bridge spans, especially the bearings, during stabilizing operations. If any unusual sounds/vibrations/movements are noticed, stabilizing operations shall be immediately stopped on that bridge and a speed restriction of 20 kmph shall be imposed on the bridge till it is examined minimum at the level of JE (Bridge).

(f) While working the machine in stretches adjacent to walls, trench walls, retaining walls, platform etc. no restrictions for the working of the machines are normally necessary. However, when these structures are defective, extra care is necessary in the proximity of 20 m on either side to avoid likely damages to the structure.

(g) No stabilizing work in tunnels is permitted.

(h) When working behind tamping machine attending track at maintenance site and deep screening site, DTS (Plasser make) should work with following parameters.

Table 2.8

Condition	**Leveling system**	**Settlement settings(vertical load)**	**Oscillation frequency**	**Working speed**
A. Stabilization of Plain Track during maintenance tamping				
	ON	70 bar	30-35 Hz	600-1300 m/h
B. Stabilization after tamping of Plain Track at newly laid/deep screened track				
After first tamping operation	OFF	80 bar (Constant Loads)	30-35 Hz	600-1000 m/h
After second tamping operation	OFF	100 bar (Constant Loads)	30-35 Hz	600-1000 m/h
After final tamping operation	ON	70 bar	30-35 Hz	600-1300 m/h
C. Stabilization of Points and crossing during maintenance tamping				
	ON	50 bar	30-38 Hz	600-1300 m/h

(i) While stabilizing Points and Crossing, DTS should not be stopped at crossing portion.

(j) Ramp in and ramp out (1 in 1000) should be given while starting the work or restarting the work at any time.

Annexure 2.1

Position of Tamping Tools in Tamping Machines

(1) Position of Tamping Tools for 09-3X Tamping Machine

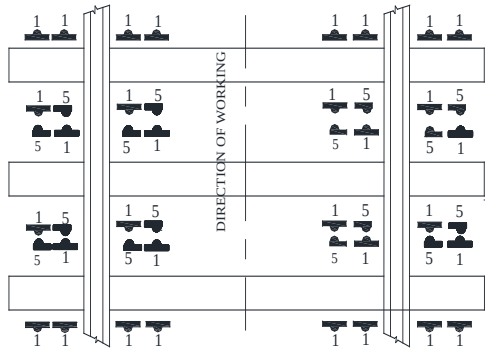

TOOL DESCRIPTION FOR TAMPING EXPRESS (09-3X)

Tool	RDSO Drg. No	Total No Required (out of 48)	Tool Sketch
1	RDSO/TM/ 15A/16	32	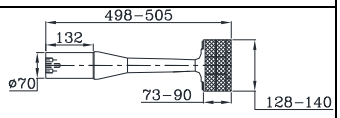
5	RDSO/TM/ 15E/16	16	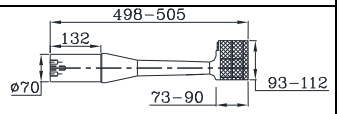

(2) Position of Tamping Tools for New CSM (MODEL CSM-955 On Ward) And DUOMATIC (New) Tamping Machine

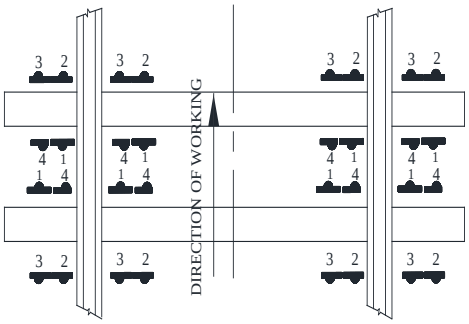

TOOL DESCRIPTION FOR NEW CSM AND DUO

Tool	RDSO Drg. No	Total No Required (Out of 32)	Tool Sketch
1	RDSO/TM/ 15A/16	08	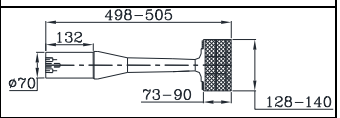
2	RDSO/TM/ 15B/16	08	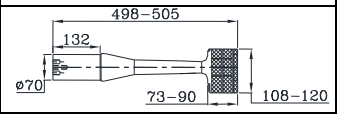
3	RDSO/TM/ 15C/16	08	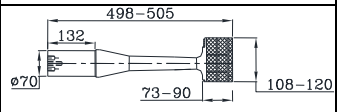
4	RDSO/TM/ 15D/16	08	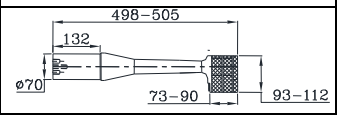

(3) Position of Tamping Tools for CSM (UPTO CSM 954)& DUO Tamping Machine (Old Model)

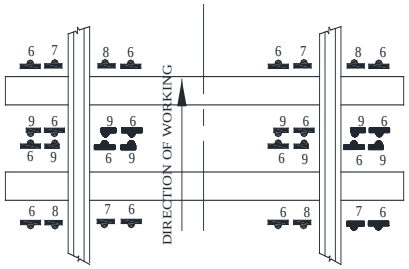

NOTE: -

1. NO. 2 & 4 CAN BE REPLACED BY EACH OTHER
2. DIMENSIONS ARE IN MM.

TOOL DESCRIPTION FOR CSM & DUO (OLD MODEL)

Tool	RDSO Drg. No	Total No Required (Out of 32)	Tool Sketch
6	RDSO/TM/ 14A/16	16	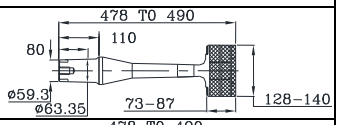
7	RDSO/TM/ 14B/16	04	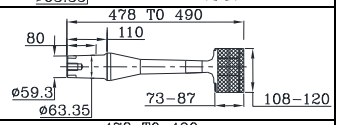
8	RDSO/TM/ 14C/16	04	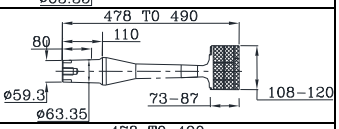
9	RDSO/TM/ 14D/16	08	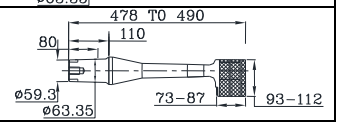

(4) Position of Tamping Tools for UNIMAT-4S Tamping Machine

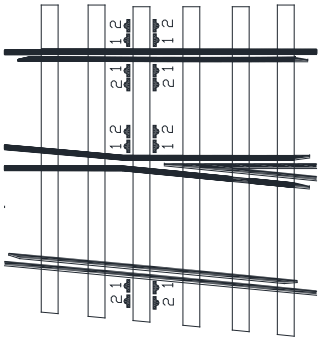

TOOL DESCRIPTION FOR UNIMAT-4S TAMPING MACHINE

Tool	RDSO Drg. No	Total No Required (Out of 16)	Tool Sketch
1	RDSO/TM/ 01A/16	08	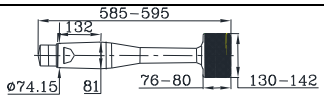
2	RDSO/TM/ 01B/16	08	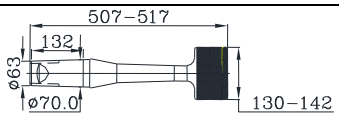

(5) Position of Tamping Tools for UNIMAT-2S & 3S Tamping Machine

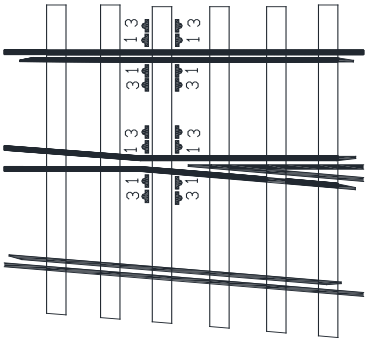

TOOL DESCRIPTION FOR UNIMAT-2S&3S TAMPING MACHINE

Tool	RDSO Drg. No	Total No Required (Out of 16)	Tool Sketch
1	RDSO/TM/ 01A/16	08	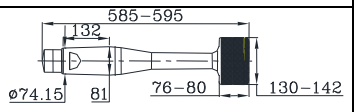
3	RDSO/TM/ 01C/16	08	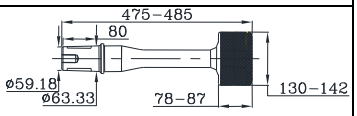

Annexure 2.2

Important Features/Dimensions of DUOMATIC & WST METEX

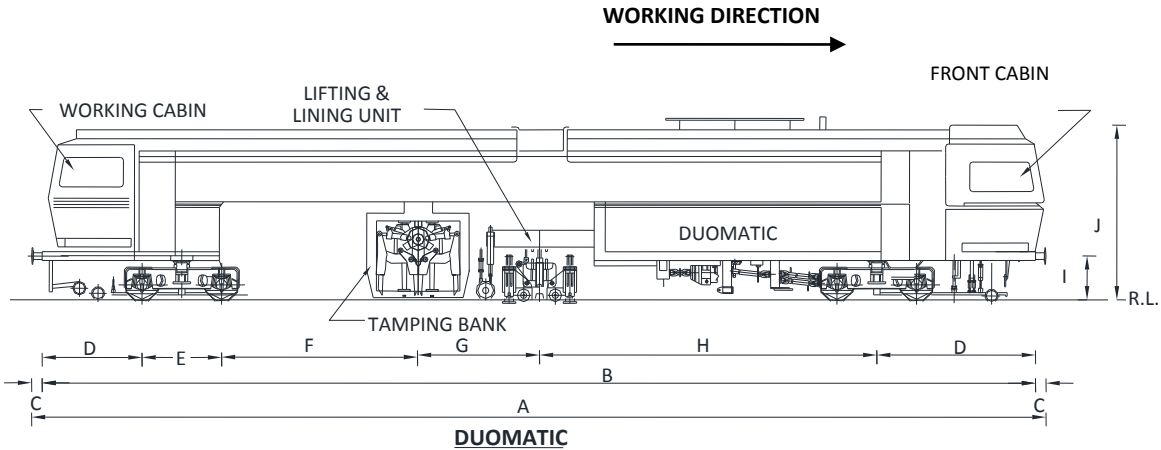

DUOMATIC

NAME OF MACHINE	A	B	C	D	E	F	G	H	I	J	WHEEL DIA	AXLE LOAD	WIDTH
08-32 DUO	18940	17670	635	2125	1830	1455			1080	3350	730	10.5t	2900
08-32C DUO	17670	16400	635	1800	1800	1600	2060	6440	1105	3715	850	12.0t	3000
VPR-02M2C DUO WITHOUT FLAT CAR	17740	16470	635	3130	1830				1105	3780	732	13.0t	2970

ALL DIMENSIONS ARE IN mm.

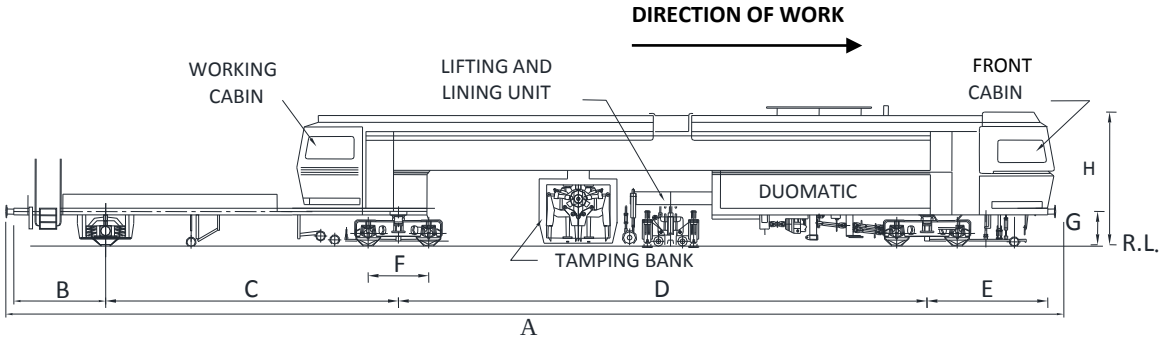

WST METEX (WITH FLAT CAR)

NAME OF MACHINE	A	B	C	D	E	F	G	H	WHEEL DIA	AXLE LOAD	WIDTH
WST METEX	23550	2000	5800	11300	3130	1830	1105	3810	710	12.5t	3000

ALL DIMENSIONS ARE IN mm.

Annexure 2.3

Important Features/Dimensions of Points & Crossing Tamping Machine

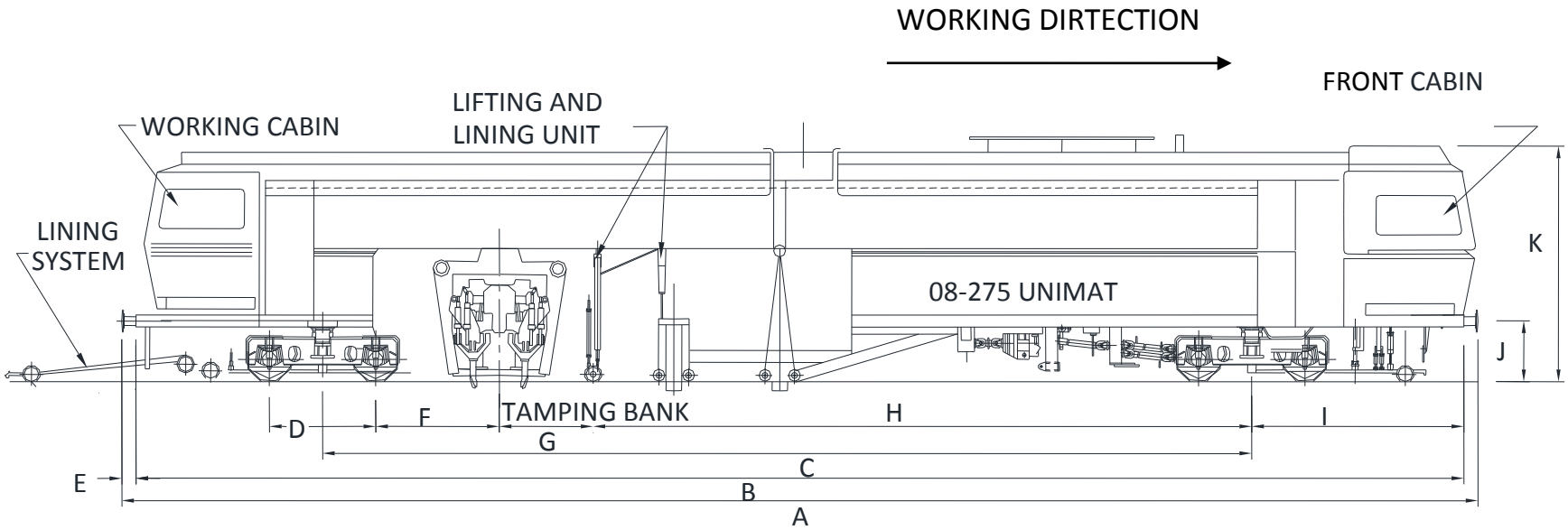

POINT & CROSSING TAMPING MACHINE

NAME OF MACHINE	A	B	C	D	E	F	G	H	I	J	K	WHEEL DIA	AXLE LOAD	WIDTH
08-275 UNIMAT	19140	17900	11500	1500	620	1530			3200	1040	3300	730	11.5t	3050
08-275 3S	21670	20400	14000	1800	635	1830			3200	1105	3550	730	17.34t	3000
08-475 4S	28370	27100	14000	1800	635	1830	1160	10110	3200	1105	3743	920	19.8t	3000

ALL DIMENSIONS ARE IN mm.

Annexure 2.4

Important Features/Dimensions of UNIMAT Split Head MFI & Multipurpose Tamping Machine

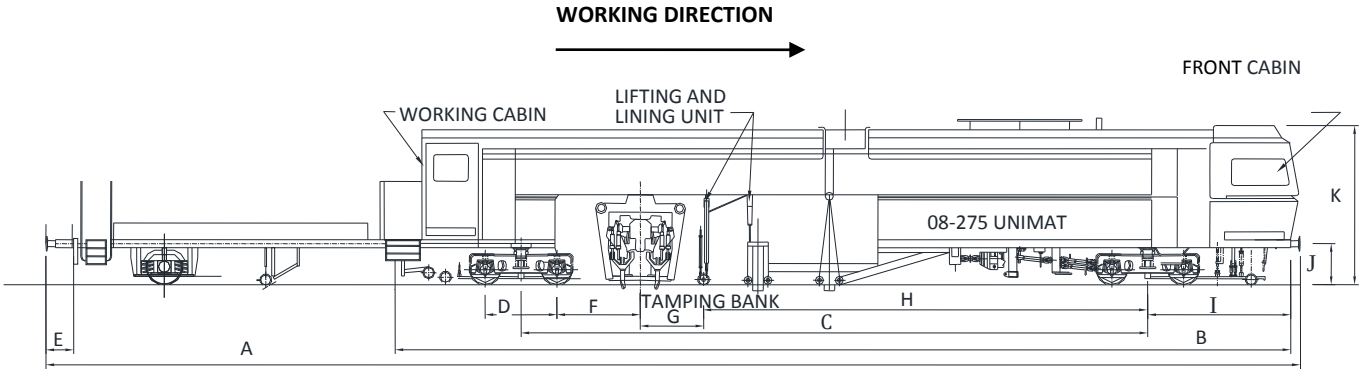

UNIMAT SPLIT HEAD MFI

NAME OF MACHINE	A	B	C	D	E	F	G	H	I	J	K	WHEEL DIA	AXLE LOAD	WIDTH
UNIMAT SPLIT HEAD MFI	28570	19000	12000	1830	635	1435	1300	8350	3500	1105	3350	730	15.75t	3000

ALL DIMENSIONS ARE IN mm.

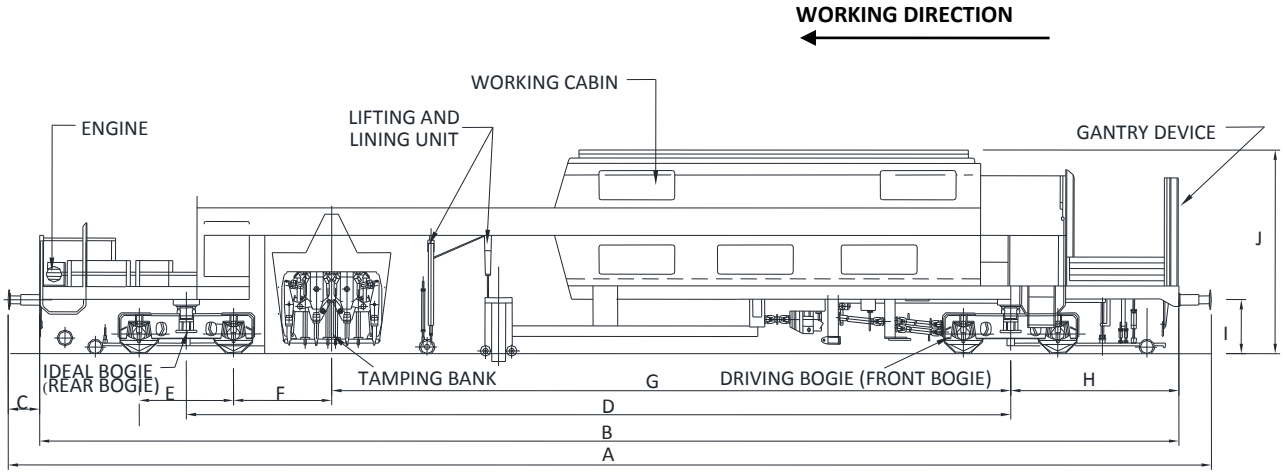

MULTIPURPOSE TAMPING (UNIMAT-COMPACT/M)

NAME OF MACHINE	A	B	C	D	E	F	G	H	I	J	WHEEL DIA	MAX. AXLE LOAD	WIDTH
MULTI PURPOSE TAMPING MACHINE	**19270**	**18000**	**635**	**12000**	**1800**	**1500**	**9600**	**3000**	**1105**	**3793**	**730**	**11.5t**	**3100**

ALL DIMENSIONS ARE IN mm.

Annexure 2.5

Important Features/Dimensions of Continuous Tamping Machine 09-32-CSM

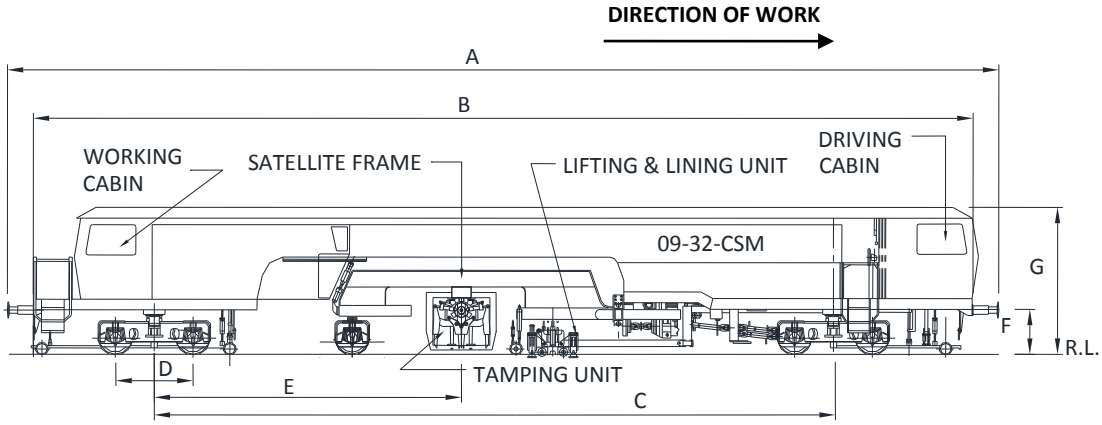

09-32-CSM

NAME OF MACHINE	A	B	C	D	E	F	G	WHEEL DIA.	SATELLITE DIA.	AXLE LOAD	WIDTH
09-32-CSM	20670	19400	13700	1800	4170	1100	3500	730	730	13.0t	3040

ALL DIMENSIONS ARE IN mm.

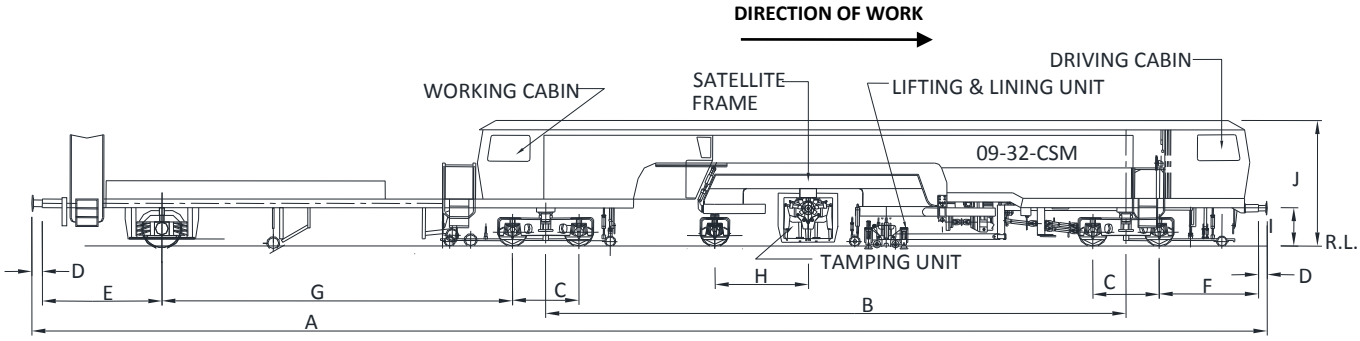

09-32-CSM

NAME OF MACHINE	A	B	C	D	E	F	G	H	I	J	WHEEL DIA	AXLE LOAD	WIDTH
09-32-CSM	27670	13700	1800	635	2000	2300	6600	1550	1100	3500	730	13.0t	3040

ALL DIMENSIONS ARE IN mm.

Annexure 2.6

Important Features /Dimensions of Tamping Express (09-3X) (Plain Track Tampers) of Different Models

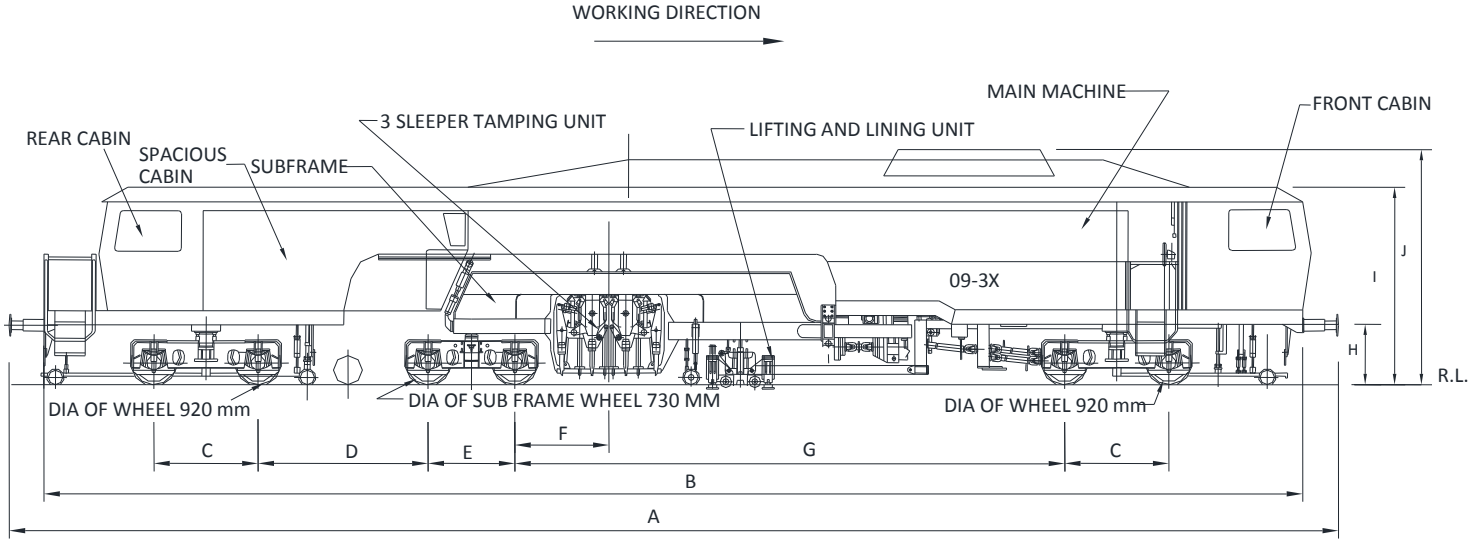

TAMPING EXPRESS

NAME OF MACHINE	A	B	C	D	E	F	G	H	J	MAIN WHEEL DAI	SATELITE WHEEL DAI	WIDTH	MAX. AXLE LOAD
TAMPING EXPRESS 09-3X AXLE LOAD 18.5t	22940	21700	1800	2935	1500	---	---	1105	4000	850	730	2900	18.5t
TAMPING EXPRESS 09-3X AXLE LOAD20.0t	22940	21700	1800	2935	1500	1800	9465		4000	730	730	2900	20.0t
TAMPING EXPRESS 09-3X AXLE LOAD 21.0t	22940	21700	1800	--	1500	1800	---	1105	3805	920	730	2900	21.0t

ALL DIMENSIONS ARE IN mm.

Annexure 2.7

Laser Sighting System

LASER lining is used on straight track in 3-point mode to remove long misalignment or false curve on otherwise straight track. The LASER system consists of LASER gun (transmitter) and LASER receiver. The LASER trolley, which consists of laser gun, is placed in front of the machine up to 200-300m away. The receiver mounted on the front tightening trolley is adjustable so that it follows the LASER beam and the position is detected by a transducer that provides an input to the lining system equivalent to the offset of the front of the chord. As the machine is working, it moves up to the LASER trolley until the distance is a minimum of 20 m away. LASER system operates fully automatically and is able to cope with distances of up to 300 m. But LASER lining is only applicable for straight track. Important details are given below:

(1) By means of a special device, the LASER beam is fanned vertically in such a way that, the eventual change in track height has no influence on the system.

(2) By means of an automatic follow up control, the LASER receiver is always positioned at the centre of the LASER beam and therefore determines the input of the slewing values.

(3) The distance of the LASER gun from the machine is also dependent on the ambient conditions (rain, snow, fog, high ambient temperature). In good ambient conditions (clear, dry air) the lining distance can be extended considerably.

Working Sequence of Design Lining with the Laser Sighting System

Phase 1 (Initial Setting) - LASER transmitter is positioned as far as possible from the machine. If the lining error (F) at P is known, the laser transmitter can be, adjusted laterally by amount of lining error F

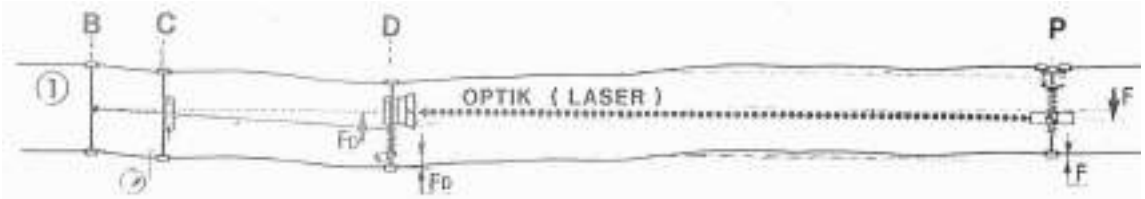

Phase 2 and 3 when the design lining commences, the front end of the chord with the LASER receiver is shifted by an amount of the error $\mathbf{F_D}$ in the direction of the emitted laser from transmitter. The track is lined at point C and matches exactly with the line of sight.

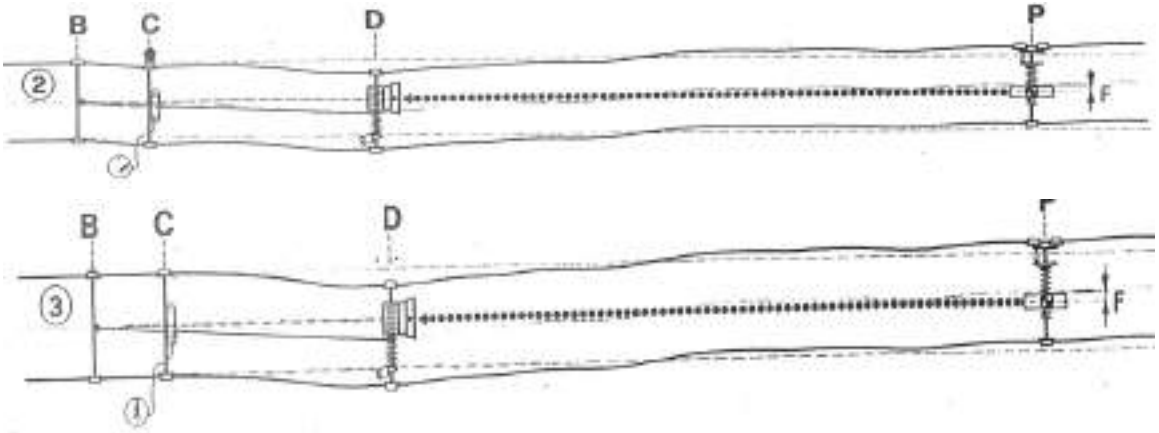

Phase 4 and 5: The machine drives forward and the front end of the chord is matched up again with the line of sight. The machine is ready for the next lining operation.

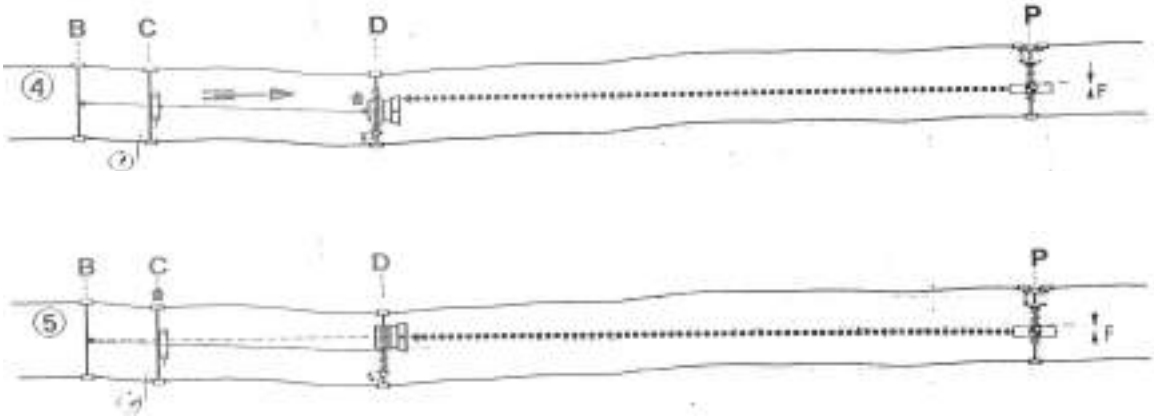

Annexure 2.8

Automatic Guiding Computer (ALC) System

It is advanced computer software loaded on on-board computer, which automatically calculates target output for the lining, levelling and cant based on manual input of required track geometry or measuring run data. The alignment, cant (SE) and level (gradient) are also displayed on the computer screen.

(1) Known Track Geometry mode

(a) Lining - If the track geometry is known, the data required for lining to be fed in ALC are

(i) Beginning of transitions

(ii) Transition lengths

(iii) Radius of circular curve

(iv) Front offset (Fd) Value

ALC software draws the curve according to input data of curve and displays on computer screen. The ALC also calculates theoretical H, H_X, H_Y, H_Z and H_W values for 3-Point lining or V_m/F values for 4-Point lining system accordingly for different locations.

While working in 4-point lining system, on curves, V_m/F values can be supplied by ALC, based on fed geometry viz. radius of circular curve and transition curve details etc.

In 3-Point lining system, ALC feeds the relevant theoretical value of H, H_X, H_Y, H_Z and H_W calculated on basis of fed geometry for that location to printed circuit board (PCB). The difference (error) in existing track parameters and fed values is calculated by (PCB) and track is corrected accordingly to eliminate the differential.

In addition, by conducting field survey for alignment, the slew values (F_D) are calculated and fed into the machine either manually or through ALC by creating a front offset data file, for design mode working.

While working on straight track, the ALC works in 3-Point lining system only by taking H values as zero.

Location of track geometry where alignment has to be fed into the machine is shown below. The input will be displayed in the same format.

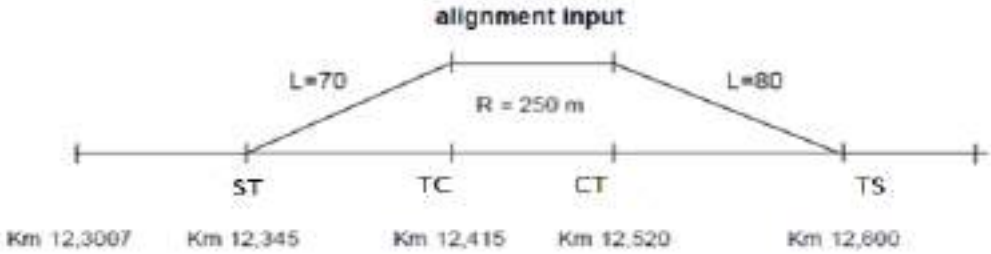

(b) Levelling - If the track geometry is known, the data required for leveling and cant correction to be fed in ALC are:

(i) Beginning of transitions

(ii) Transition lengths

(iii) Maximum Cant (super-elevation)

(iv) Beginning and end of vertical curve (circular) and its radius or gradient detail.

The ALC feeds the calculated SE value, K value and X value at different locations for correction by the machine. At any location (point) required cant and lift value can be seen on screen by positioning the curser.

Target height (Y) values for datum rail are fed in general lift potentiometer (values may be written on sleepers) or through a data file of distance and target height (prepared separately) for automatic leveling by ALC.

Location where superelevation and gradient are fed into ALC are shown below:

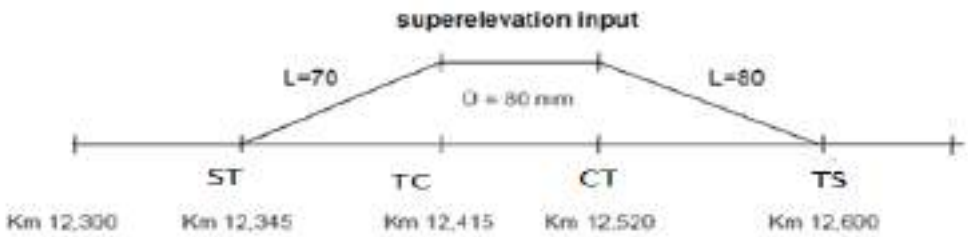

Gradient input

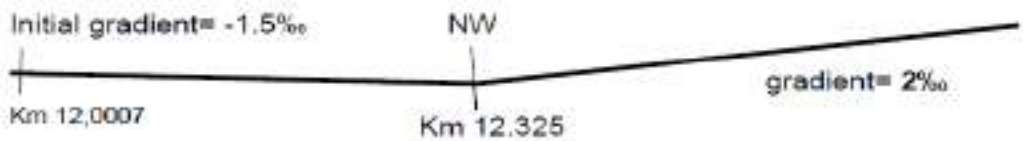

(2) Unknown Track Geometry or Measuring run mode

(a) **Lining -** Measuring run and correction to alignment is done in 3-Point system only. The ALC measures the existing track geometry by taking a measuring run at a speed up-to 10 km/h. The existing track geometry is also displayed on computer screen. The target curve alignment can be decided on the basis of measuring run data and the curve can be corrected accordingly. Front offset value is automatically calculated by ALC and fed based on existing and proposed geometry.

(b) **Levelling -** Measuring run records the vertical profile of the track and the level is smoothened to best profile within the maximum and minimum lifting value fed through ALC computer.

Annexure 2.9

Machine Trolley Distances

S.No.	Machine	Trolley Distances, I, N, Constant Value 7 System constant										
		AB	BC	CD	AC	BD	AD	I	n 4Pt	n 3Pt	Constant Value 4 Pt	System constant 3 Pt.
1	0 8 - 32 (8018-8045)	5	5	10	10	15	20	1.33	6	3	83333	25000
2	08-275 (8249-8060)	5	5	10.6	10	15.6	20.6	1.358974	6.4272	3.12	88.333	26500
3	08-275 -3S(8292-8312)	4.2	5.69	12.71	9.89	18.4	22.6	1.626577	7.389545	3.233743	119.207	36159
4	UNIMAT COMPACT- M(2000-2002)	5	5.4	11	10.4	16.4	21.4	1.395122	6.249288	3.037037	102.96	29700
5	UNIMAT COMPACT- M (2003-2008)	5	5.6	10.8	10.6	16.4	21.4	1.396098	5.912399	2.928571	106.848	30240
6	0 9- 32 CSM (901-953)	6	4.7	10.05	10.7	14.75	20.75	1.215085	6.085951	3.138298	84.2357	23617
7	0 9-3X Tamping Express (2954-3963)	4.35	5.475	11.075	9.825	16.55	20.9	1.511433	6.430246	3.022831	99.2908	30317
8	0 8-32 New (8049-8059)	5	5.115	9.8	10.115	14.915	19.915	1.329226	5.741059	2.915934	84.5057	25063
9	08-275 UNIMAT-3S (8261-8291)	4.2	5.18	12.82	9.38	18	22.2	1.59063	8.224185	3.474903	103.8172	33203
10	08-475 UNIMAT-4S (8401-8418)	5.85	6.09	12.71	11.94	18.8	24.65	1.379864	6.373136	3.087028	154.0337	38701
11	0 9-3X Tamping Express (2964-3965)	4.35	5.475	11.075	9.825	16.55	20.9	1.511433	6.430246	3.022831	99.2908	30317
12	0 9-3X Tamping Express (3966-3971)	4.35	5.475	11.075	9.825	16.55	20.9	1.511433	6.430246	3.022831	99.2908	30317
13	0 9- 32CSM (954-967)	6	3.79	10.96	9.79	14.75	20.75	1.212411	8.248751	3.891821	67.7768	20769
14	UNIMAT MFI SPLIT HEAD (2009-2018)	5	6.05	11.2	11.05	17.25	22.25	1.434899	5.741184	2.85124	124.7913	33880
15	08-32 C (8128-8140)	5	5.3	9.35	10.3	14.65	19.65	1.314744	5.273356	2.764151	85.0694	24777
16	09-32 CSM (968 -984)	6	3.79	10.96	9.79	14.75	20.75	1.212411	8.248751	3.891821	67.7768	20769

Annexure 2.10

Sample-Versine compensation (V) in 4 point lining at Location with changing curvature (DUO-0832C)

V-VALUES

Transition - curve

Transition - straight

Adjustment from Front Cabin

m	2.0	4.0	6.0	7.0	8.0	9.0	10.0	11.0	12.0	13.0	14.0	15.0	17.0	19.0	19.7	0.0	0.0	0.0	0.0
Vo	1.00	0.98	0.92	0.87	0.81	0.73	0.63	0.51	0.39	0.28	0.18	0.10	0.02	0.00	0.00	0.00	0.00	0.00	0.00
2	2	2	2	2	2	1	1	1	1	1	0	0	0	0	0	0	0	0	0
4	4	4	4	3	3	3	3	2	2	1	1	0	0	0	0	0	0	0	0
6	6	6	6	5	5	4	4	3	2	2	1	1	0	0	0	0	0	0	0
8	8	8	7	7	6	6	5	4	3	2	1	1	0	0	0	0	0	0	0

V-VALUES

straight - transition

curve - transition

Adjustment from front cabin

m	2.0	4.0	6.0	7.0	8.0	9.0	10.0	11.0	12.0	13.0	14.0	15.0	17.0	19.0	19.7	0.0	0.0	0.0	0.0
Vo	0.00	0.02	0.08	0.13	0.19	0.27	0.37	0.49	0.61	0.72	0.82	0.90	0.98	1.00	1.00	0.00	0.00	0.00	0.00
2	0	0	0	0	0	1	1	1	1	1	2	2	2	2	2	0	0	0	0
4	0	0	0	1	1	1	1	2	2	3	3	4	4	4	4	0	0	0	0
6	0	0	0	1	1	2	2	3	4	4	5	5	6	6	6	0	0	0	0
8	0	0	1	1	2	2	3	4	5	6	7	7	8	8	8	0	0	0	0

Annexure 2.11

Sample- F- Values with reference to radius of circular curve

F-VALUES (for circular curves without transitions)	
R	Fm
990	9
980	9
970	9
960	10
950	10
940	10

F-VALUES

straight - curve

curve - straight

Adjustment from front cabin

m	2.0	4.0	6.0	7.0	8.0	9.0	10.0	11.0	12.0	13.0	14.0	15.0	17.0	19.0	19.7	0.0	0.0	0.0	0.0
Fo	0.04	0.15	0.33	0.45	0.59	0.75	0.91	0.99	0.99	0.92	0.76	0.53	0.17	0.01	0.00	0.00	0.00	0.00	0.00
2	0	1	1	1	1	2	2	2	2	2	2	1	0	0	0	0	0	0	0
4	0	1	1	2	2	3	4	4	4	4	3	2	1	0	0	0	0	0	0
6	0	1	2	3	4	5	5	6	6	5	5	3	1	0	0	0	0	0	0
8	0	1	3	4	5	6	7	8	8	7	6	4	1	0	0	0	0	0	0
10	0	1	3	5	6	8	9	10	10	9	8	5	2	0	0	0	0	0	0

Annexure 2.12

Example: Sequence of tamping of track by WST 08-32C.

A. Detail about track & general input.

i) SE= 50 mm. R=400 m. Transition Length L_1 & L_2=50 m.

ii) General lift required 30 mm (based on general survey)

iii) Starting and closing shall not be in curve.

B. Detail about Machine 08.32C.

i) Lining chord

AC=10.30 CD=9.35 BC=5.30 AB=5 m

BD=14.65 m AD=19.65 m.

ii) Levelling Chord.

RM=5300 mm. MF=9350 mm. RF=14650 mm

C. Sequence of working

1. Tamping parameters setting.

i) Set tamping depth=Sleeper height + Rail height+6 mm (Pad)

ii) Set Sq. time as prescribed in instruction manual for that machine.

iii) Deciding on squeezing pressure.

2. General lift (manual feeding through front potentiometer)

Calculation method is given in Annexure 2.10 should be followed.

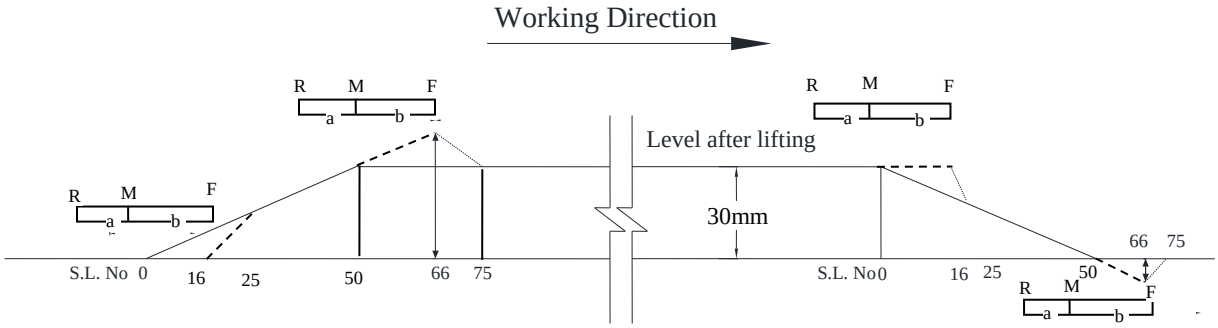

Length of ramp in and ramp out = 30.1000 = 30,000 mm
No. of sleepers in which this ramp is achieved = 30,000/600 = 50
No. of sleepers in length RM(a) = 5.3/0.6 = 9
No. of sleeper in length MF(b) = 9.35/0.6 = 16
Rate of lift per sleeper = 30/50 = 0.6 mm
So, feeding of lift value on 66 sleepers in ramp in will be 66X 0.6 = 39.6 mm (40 mm)
Lift at other locations can accordingly be calculated.

3. 4 - Point Lining

Calculation Vm value is done by Formula Vm = AC.CD.BC/6RL

Vm value also given in respective machine catalogue

Here Vm= 10.30x9.35x5.30/6x400x50 = 4.25 mm = 4 mm

Distribution of 4 mm is given in machine catalogue and shall be fed through versine potentiometer. The direction and distribution of V value (compensation Value) will be as below

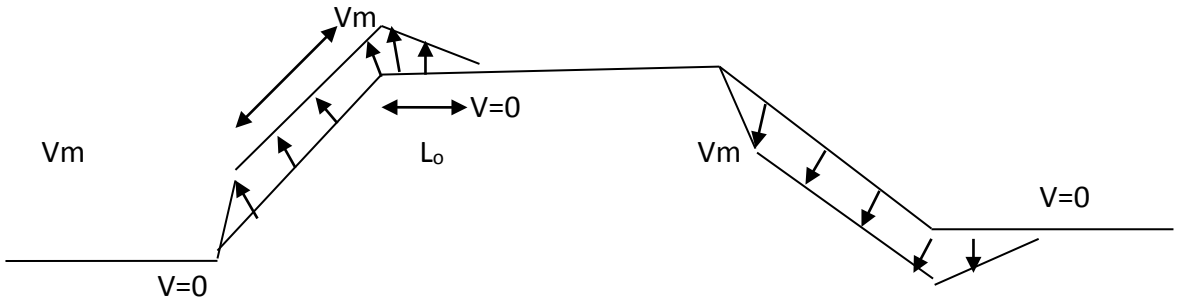

4. 3 – Point Lining

If machine is working in 3 point Lining then calculate following versines for input.

I) H value= BC.CD/2R = 5.30x9.35/2x400 =62mm or constant/ R = 24778/ 400

II) Hv (versine varying per meter) = BC.CD/2RL = 62/50= 1.24 mm/m

It may also be calculated as

Hv= (versine at starting Y-versine at end of x) / (Transition Length – Machine chord length)

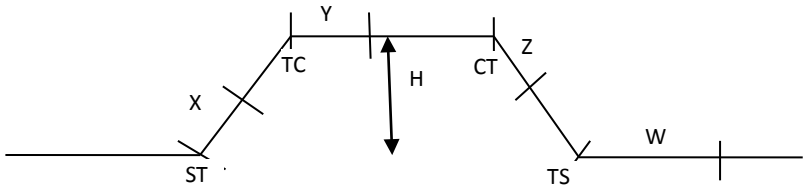

Length of X, Y, Z & W i.e. =BD=14.75

Hx, Hy, Hz and Hw shall be calculated as given in Example-2

5. Levelling System

a) **Cant**

If fed through front tower, cant should be fed as given in Para 224 (1)

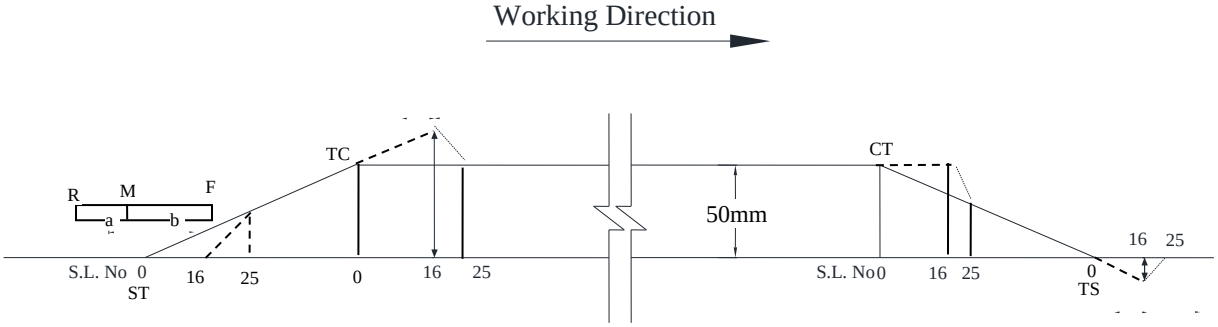

Divide cant value (Max) by transition length= 50mm/50m= 1mm/m

Cant value to be distributed in full transition as shown above. Similar to the method shown for feeding general lift the cant value in front tower for getting a cant of 50 mm at TC will be

= (50 mm + 0.6 x 16) x 1 = 59.6 mm

Cant at other locations can be calculated accordingly.

If fed in working cabin, the actual cant at that location (M) shall be fed, with maximum value as 50 mm.

b) **K Correction Value -** While working in curve general lift has to be reduced by K value as given in para 224 (2). The value of K correction is supplied by manufacturers in their manual.

K value of given data =3mm, which means 3 mm will be subtracted from general lift 30mm in circular position i.e. max between TC to CT and Zero at ST and TS.

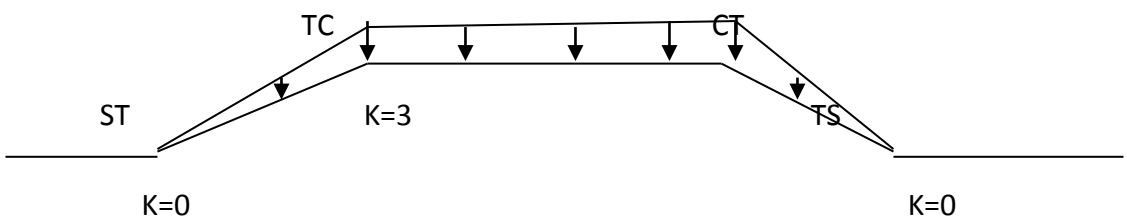

c) **X Value -** For vertical curve, X value should be fed as described in manual.

In machines with ALC, all the above parameters are either fed or are automatically calculated by ALC itself on the basis of input of track geometry.

6. Additional Input for Design Mode of Lining and Levelling:

I) Lining: F_D value (offset value) fed in the front cabin by slew potentiometer. F_D is amount by which track is shifted from its desired/design position

II) Levelling: target height value (Y) i.e. Desired lift over the Datum rail.

FD and Y are determined by field survey and calculating slew and lift manually/using software and can also be fed by making a data file for ALC or by using laser (3-Point Lining) system as applicable.

Alternatively, in machines with ALC where Measuring run is taken all the required feedings (included front offset F_D and lift Y) are automatically taken into account based on final alignment decided.

In brief the input required in different mode of working on curves are

Mode of working	Values to be fed			Remark
	Versine/versine compensation	Slew	cant	
4 pt. smoothening/ compensation mode	Yes (Versine compensation)	-	Yes	1. Existing curve radius and Transition length required for calculating versine compensation (Vm). 2. Desired cant should be known. 3. K-value should be calculated and adjusted in general lift. 4. X-value if required should also be adjusted in general lift.
4 point design / Precision mode	Yes (versine compensation)	Yes (F_D Values)	yes	1. Designed curve radius and Transition length required for calculating versine compensation (Vm). 2. Designed cant should be known. 3. K-value should be calculated and adjusted in lift value (Y). 4. X-value if required should also be adjusted in lift value (Y). 5. In addition to above, F_D and Y should be ascertained by field survey for designed curve.
3 point Elementary mode	Yes (Versine values H, H_X, H_y, H_z, H_w, H_v, HF_x, HF_w)		yes	1. Existing curve radius and Transition length required for calculating Versine values. 2. Designed cant should be known. 3. K-value should be calculated and adjusted in general lift. 4. X-value if required should also be adjusted in general lift.
3 point design or precision mode	Yes (Versine values H, H_X, H_y, H_z, H_w, H_v, HF_x, HF_w))	Yes (F_D Value)	Yes	1. Designed curve radius and Transition length required for calculating Versine values. 2. Designed cant should be known. 3. K-value should be calculated and adjusted in lift value (Y) 4. X-value if required should also be adjusted in lift value (Y). 5. In addition to above, F_D and Y should be ascertained by field survey for designed curve..

Annexure 2.13

Example – Ramp In and Ramp Out (Fed through front potentiometer)

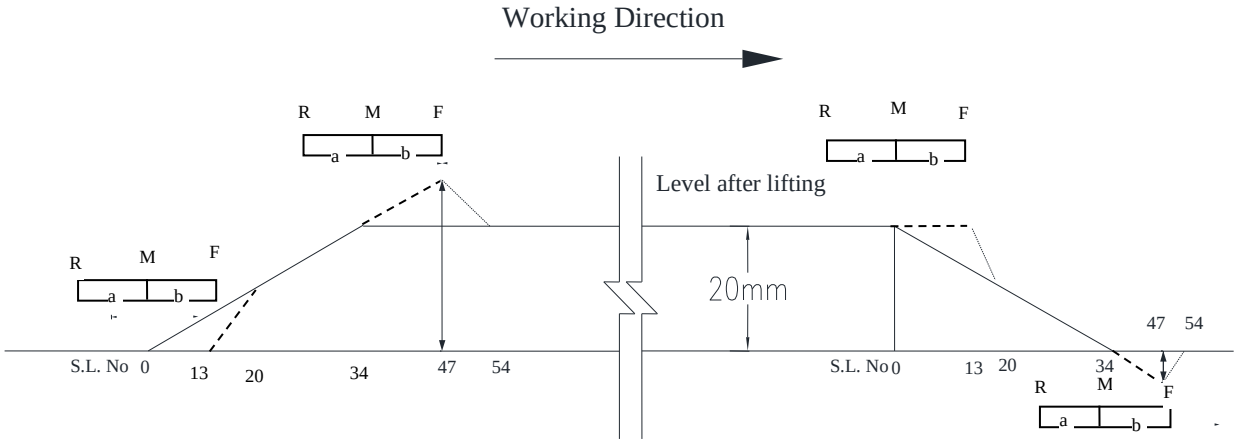

Diagram For Feeding of Ramp In and Ramp Out

Say general lift is 20mm and track has sleeper spacing of 60 cm.

Length of track in which gradient of 1 in 1000 is achieved=20x1000=20,000 mm

No of sleepers in which ramp is achieved = 20000/600= 34

Rate of lift per sleeper would be: 20/34 mm i.e. 0.6 mm

Machine used has a=4.0 m b=8.0 m c=12.0 m and r=3

No of sleepers in between FM = b/0.6=13

No of sleepers between RM = a/0.6=7

The calculation is tabulated below, however it must be noted that

1. This is only a sample calculation shown. The lift values should be rounded off when applied in field.

2. The above sample may also be used for tamping by machines by tamping 2/3 sleepers at a time by properly selecting the lift value.

3. In design mode tamping, ramp should be provided as per actual lift value at the close of work.

Ramp in feed value				
Sleeper No From start of Ramp in (n)	LIFT at nth sleeper (Xn)	FEED at Front tower (Fn)	Remarks	Corresponding Sleeper at Front tower
0	0	0	Xn=n*0.6 Fn=Xn*r	13
1	0.6	1.8		14
2	1.2	3.6		15
3	1.8	5.4		16
4	2.4	7.2		17
5	3	9		18
6	3.6	10.8		19
7	4.2	12.6		20
8	4.8	13.2	Xn=n*0.6 Fn=F7 + (n-7)*0.6 And will continue till n=34	21
9	5.4	13.8		22
10	6	14.4		23
11	6.6	15		**24**
12	7.2	15.6		25
13	7.8	16.2		**26**
14	8.4	16.8		27
15	9	17.4		28
16	9.6	18		29
17	10.2	18.6		30
18	10.8	19.2		31
19	11.4	19.8		32
20	12	20.4		33
21	12.6	21		34

Ramp in feed value Contd..				
Sleeper No From start of Ramp in (n)	LIFT at nth sleeper (Xn)	FEED at Front tower (Fn)	Remarks	Corresponding Sleeper at Front tower
21	12.6	21		34
22	13.2	21.6		35
23	13.8	22.2		36
24	14.4	22.8		37
25	15	23.4		**38**
26	15.6	24		**39**
27	16.2	24.6		40
28	16.8	25.2		41
29	17.4	25.8		42
30	18	26.4		43
31	18.6	27		44
32	19.2	27.6		45
33	19.8	28.2		46
34	20.4	28.8		47
35	20.4	27.6	Xn remains constant and Fn reduces to 20.4 in next 7 sleepers @ (28.4-20.4)/7=1.2 mm/sleeper	48
36	20.4	26.4		49
37	20.4	25.2		50
38	20.4	24		51
39	20.4	22.8		52
40	20.4	21.6		53
41	20.4	20.4		54

Ramp out feed value				
Sleeper No From start of Ramp out	LIFT at nth sleeper (Xn)	FEED at Front tower (Fn)	Remarks	Corresponding sleeper at Front tower
0	20.4	20.4	Xn=20.4-0.6*r F7= 16.2-0.6*13 F1 to F7 shall be distributed in between decreasing @1.7 mm/per sleeper	13
1	19.8	18.6		14
2	19.2	16.8		15
3	18.6	15		16
4	18	13.4		17
5	17.4	11.8		18
6	16.8	10.2		19
7	16.2	8.4		20
8	15.6	7.8	Both Xn and Fn will reduce uniformly @ 0.6 mm per sleeper till n is 34	21
9	15	7.2		22
10	14.4	6.6		23
11	13.8	6.0		**24**
12	13.2	5.4		25
13	12.6	4.8		**26**
14	12	4.2		27
15	11.4	3.6		28
16	10.8	3.0		29
17	10.2	2.4		30
18	9.6	1.8		31
19	9	1.2		32
20	8.4	0.6		33
21	7.8	0		34

Ramp out feed value				
Sleeper No From start of Ramp out	LIFT at nth sleeper (Xn)	FEED at Front tower (Fn)	Remarks	Corresponding sleeper at Front tower
22	7.2	-0.6		35
23	6.6	-1.2		36
24	6	-1.8		37
25	5.4	-2.4		**38**
26	4.8	-3.0		**39**
27	4.2	-3.6		40
28	3.6	-4.2		41
29	3	-4.8		42
30	2.4	-5.4		43
31	1.8	-6.0		44
32	1.2	-6.6		45
33	0.6	-7.2		46
34	0	-7.8		47
35	0	-6.7	Xn=0 Fn will increase to zero in next 7 sleepers @ 1.1mm/sleeper	48
36	0	-5.6		49
37	0	-4.5		50
38	0	-3.4		51
39	0	-2.3		52
40	0	-1.2		53
41	0	0		54

Annexure 2.14

Sample-Correction (K) for Curvature

GAUGE = 1676 mm

K = 41 X SE/R

SE(mm) / R(m)	10	20	30	40	50	60	70	80	90	100	110	120	130	140	150	160
60	7	14	20	27	34	41	48	54	61	68	75	82	89	95	102	109
70	6	12	18	23	29	35	41	47	53	58	64	70	76	82	88	93
80	5	10	15	20	26	31	36	41	46	51	56	61	66	72	77	82
90	5	9	14	18	23	27	32	36	41	45	50	54	59	64	68	73
100	4	8	12	16	20	25	29	33	37	41	45	49	53	57	61	65
110	4	7	11	15	19	22	26	30	33	37	41	45	48	52	56	59

Annexure 2.15

Sample-Value of X for Vertical Curves

GAUGE = 1676 mm

FOR 09-32CSM

X = = 83586/R

X(After AA)(mm	1	2	3	4	5	6	7	8	9	10	13	15.6
2400	0	1	2	3	5	8	10	13	17	21	29	35
2600	0	1	2	3	5	7	9	12	16	19	27	32
2800	0	1	2	3	4	6	9	11	14	18	25	30

GAUGE = 1676 mm
FOR 09-32 CSM

X = 83586/R

X (After AE) (mm) R(m)	0	1	2	3	4	5	6	7	8	9	10	13	15.6
2400	35	35	34	33	31	30	27	25	21	18	14	6	0
2600	32	32	31	30	29	27	25	23	20	17	13	5	0
2800	30	30	29	28	27	25	23	21	18	15	12	5	0

Annexure 2.16

Guidelines for surveying of track for getting offset values for Design mode of tamping

By working the tie tamping machines in design mode, the long wave length irregularities of longitudinal level and alignment can be rectified. Hence, the tamping machines for projects and other work sites should be worked in Design mode and proper survey for getting offset values should be done.

(1) Survey for Longitudinal/Vertical Profile Correction:

(a) The identified section should be divided by marking stations at 10 m interval. The starting point should be opposite a km post and the starting station should be marked 0. Station locations and station numbers should be painted in yellow paint on the web of the datum rail.

(b) **Bench Marks -** Benchmarks should be established at 200-1000 m interval, relating them to the GTS benchmark levels so that the plotted drawings are properly related to the existing index section. Fixing benchmarks in relation to arbitrary levels shall be avoided. These benchmarks can be established on the top of concrete foundation of OHE masts in electrified sections with conspicuous markings.

(c) **Recording of Existing Rail Levels -** The SSE/JE(P.Way) should record the actual rail levels at all the stations of the datum rail, making use of the established benchmarks. However, on the stretches where the datum rail is super-elevated, being on a horizontal curve, the rail levels should be taken on the other rail of the track, opposite the station locations. The stretch, for which station levels are taken on "non- datum" rail, shall be noted in the level book.

(d) **Formation Levels -** At every 5th station i.e. Station No. 0, 5, 10 etc., the SSE/JE(P.Way) should remove ballast below the rail seat where rail levels are recorded, up-to a level, below which it is not desirable to go, while carrying out deep screening work known as formation level and record the same. For example, in the redesigned vertical profile the rail level should be 700 mm (approx.) and 680 mm (approx.) above the formation level in case of 60 kg and 52 kg rail respectively on PSC sleepers with 300 mm ballast cushion, if sub-ballast is not provided.

(e) **Obligatory Points -** While carrying out the survey, the SSE/JE (P.Way) should record the location of obligatory points like level crossings, girder bridges, points and crossings, overhead structures etc., in reference to the station numbers as well as running kilometre. The location of km posts and gradient posts should also be noted.

(2) Plotting of Vertical Profile

(a) The existing vertical rail profile (of datum rail) and formation profile should be plotted on a graph sheet with the length of track as abscissa and elevation of rail top and formation as ordinate. The scale adopted should be: Horizontal Scale: 1:1000 (1 cm = 10 m); and Vertical Scale: 1:10(1 mm = 10 mm)

(b) Having plotted the formation levels, the desired rail levels should be marked on the graph e.g. by adding 70 cm to the formation level in case of 60 kg rail on PSC sleepers (with 30 cm ballast cushion) and 68 cm in case of 52 kg rail on PSC sleepers (with 30 cm ballast cushion). The desired rail level so plotted should be taken into account, while marking the proposed

vertical profile on the graph.

(3) Proposed Rail Profile - While deciding the final levels, the following considerations shall be taken into account:

(a) Sub sections shall be selected keeping in view high points and obligatory points.

(b) As far as possible, long stretches of uniform gradient shall be planned keeping in view the depth of construction to be provided and relative implications of lifting or lowering of track. In no case the grade should exceed the ruling gradient of the section. While designing vertical curves, provisions of **IRPWM should** be observed.

(c) The clearance to overhead structures (including OHE) shall be maintained within permissible limits.

(d) The redesigned profile should not normally involve lifting or lowering of obligatory points like girder bridges, Level crossing, and turnouts. For this purpose the SOD infringements, if any, shall also be considered.

(e) The redesigned profile should aim at easing the sags and humps with manageable lift and lowering. It is not necessarily the intention that the original longitudinal section of the line should be restored.

(f) Generally, the redesigned profile should be so arrived at as to have only lifting, as machines can lift but can't lower. Lowering shall be resorted to in exceptional circumstance only.

(g) Prescribed minimum ballast cushion as per **IRPWM** should be ensured. However, the requirement of ballast, over and above that for the prescribed cushion, can be optimised by designing suitable vertical curves.

(h) At locations where lifting or lowering is not possible, suitable ramping out preferably in the form of reverse curves in vertical plane should be provided on both approaches. In case lift is proposed at level crossings, the field staff should be prepared to simultaneously raise the road surface and re-grade the approaches.

(i) High points on the turn out and approaches should be determined and general lift of minimum 10 mm (generally 20 mm) must be given at that point.

(4) In Redesigning the Profile, the requirements to be met are

(a) **For other than vertical curves** - The unevenness on 80 m chord should not exceed as under:

(i) On high-speed routes with speed above 110 km/h – 40 mm (corresponding to 20,000m vertical radius).

(ii) On other lines - 65 mm (corresponding to about 12,000 m vertical radius).

(b) **For vertical curves** - The unevenness on 20 m chord should not exceed 10 mm (corresponding to 5,000 m vertical radius)

The profile designed should be analytically verified so that the above-mentioned unevenness limits are not exceeded. The final levels at various points should be calculated, rather than scaling-out from the drawing, which mainly serves the purpose of visual appreciation.

(i) The proposed levels should be approved by an officer not below the rank of DEN/XEN. The working plan so prepared should be distributed to the concerned field staff and AEN.

(ii) Designing vertical profile with the help of computer

For designing of vertical profile, aid of a computer with software developed by IRICEN/Pune may be taken to speed up the design work.

(5) Surfacing Operation (By calculating Lifting value Y from Plotted Graph)

(a) The finally proposed levels of rail top may be marked on the OHE masts/permanent reference pillars for executing the lifting/lowering operation. In case of non-electrified section, permanent level pegs should be provided at every 5th station (50 m approx.).

(b) Actual work of lifting and lowering may be carried out in keeping with the instructions laid down in **IRPWM.**

(c) The finished profile may not exactly conform to the redesigned profile, and the resurfaced levels may vary from the design profile. It is, therefore, necessary to check the finished levels in relation to the levels marked on the OHE masts/permanent reference pillars. The difference between the finished levels and designed levels should not exceed 10 mm, provided that the variation of unevenness from station to station is not more than 20 mm. To ensure this, SSE/JE (P.Way) will work out the unevenness at all stations in relation to the finished levels and the machine in-charge shall apply correction to levels, to bring the station-to-station variation of unevenness within the prescribed limit.

(6) Survey For Alignment Correction

(a) All the weld and rail kinks should be rectified/eliminated by de-kinking or cutting and welding, before measurement for alignment defects are taken. Hydraulic jim-crows may be used for removing kinks.

(b) In case some horizontal curves on the section to be surfaced warrant realignment, then the process of realignment should be carried out along with surfacing.

(c) Alignment should be measured on a long chord (at least 200 m) on straight track and required slews, at alternate sleeper, should be worked by measuring the offsets at every 5 m interval and interpolating the offsets. The slews (F_D) should be written on alternate sleeper.

(d) On curved track, versines should be measured on 20 m chord at 10 m intervals. The required slews at the stations are worked out taking note of the obligatory points and interpolated to give slews at every alternate sleeper. The slews are then written on alternate sleepers.

(e) While working out slews (F_D), position of fixed structures should be noted and infringement to moving dimensions shall not be allowed.

(f) Pre-tamping and Post-tamping operation and machine related track works as detailed in para 226 shall be ensured by the SSE (P.Way).

(g) The beginning and end of curve/transition curves should be identified and marked in the form of permanent reference pillars. These reference pillars should also be installed at every 50 m alongside the length of track and documented for future reference for alignment as well as level. OHE mast in electrified sections can also be used for reference marks after markings and its documentation with intermediate reference pillars.

Annexure 2.17

Sequence of Tamping of Different Points& Crossing (UNIMAT-2S)

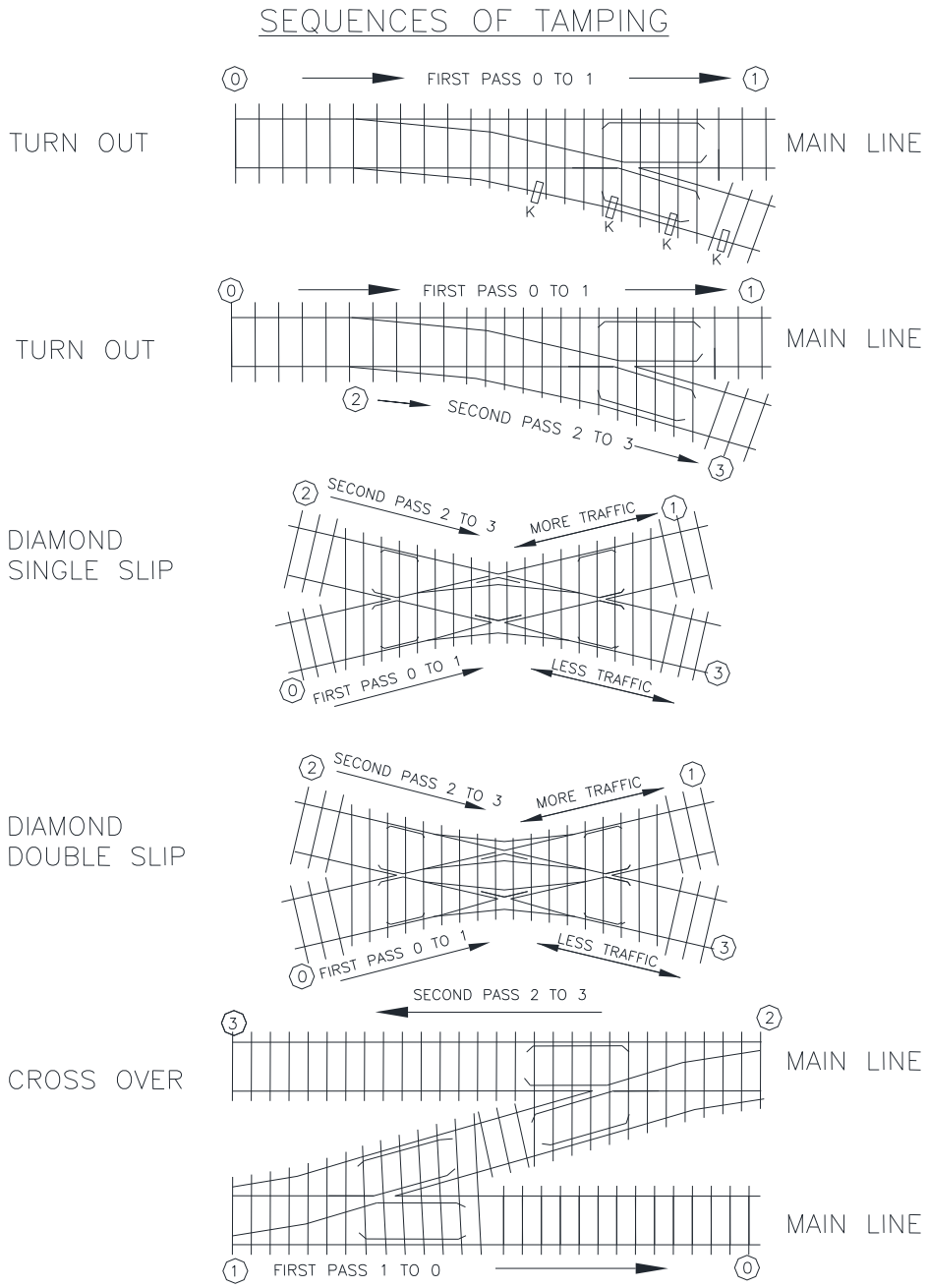

NOTE:—WOODEN BLOCKS TO BE PLACED AT 'K' POSITION SHOWN ABOVE IN CASE ONLY MAIN LINE TRACK IS TAMPED AND TURN OUT SIDE IS LEFT WHILE PASSING TRAIN

Annexure 2.18

Important Features/Dimensions of Dynamic Track Stabilizer

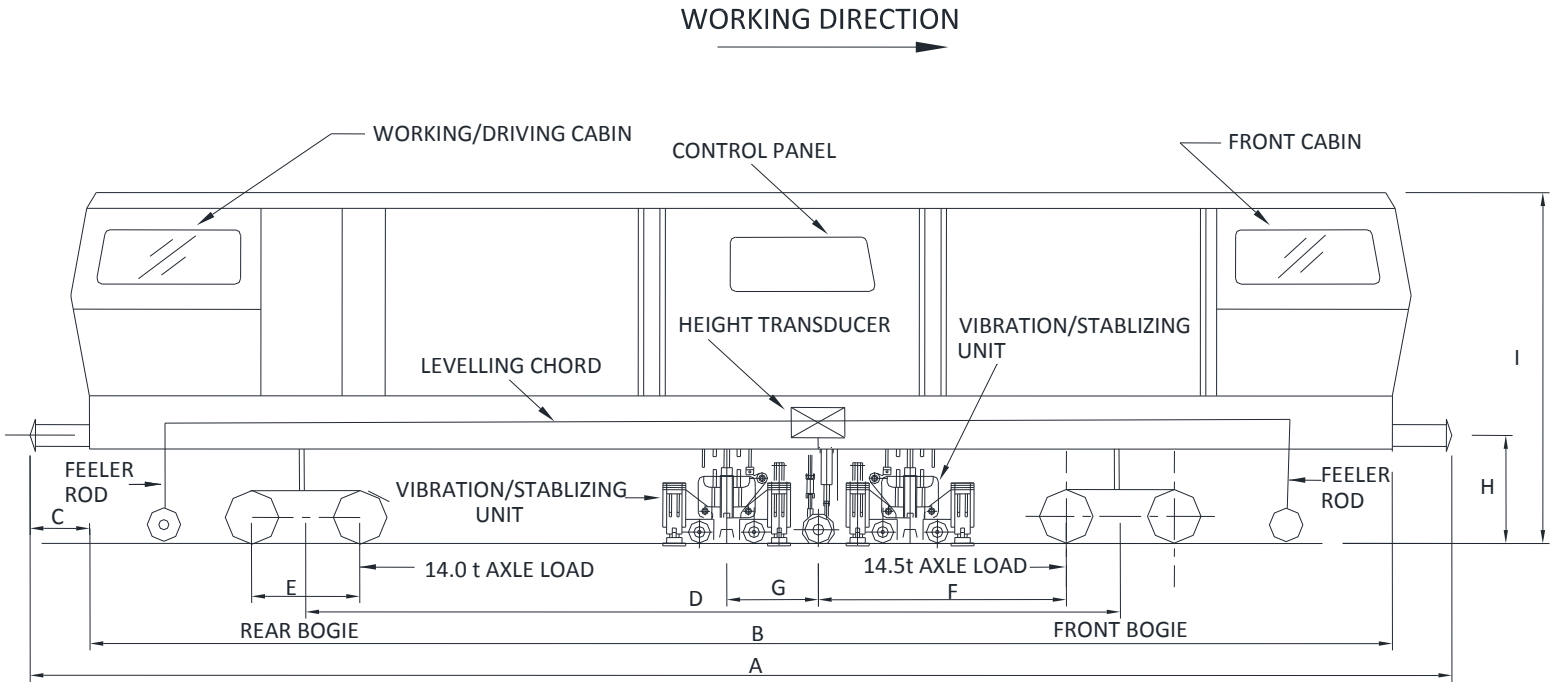

DYNAMIC TRACK STABILIZER (DTS)

NAME OF MACHINE	A	B	C	D	E	F	G	H	I	WHEEL DIA	AXLE LOAD	WIDTH	REMARKS
DTS/BHEL	18066	16800	633	11200	2200	–	–	1092	3930	1000	20t	2850	2 VIB. UNIT
DTS/MATEX	18270	17000	635	13000	1830	–	–	1105	3815	860	15t	2900	3 VIB. UNIT
DGS-62N/PLASSER	17250	16010	620	12000	1500	–	–	1105	3790	730	14.5t	2800	2 VIB. UNIT

ALL DIMENSIONS ARE IN mm.

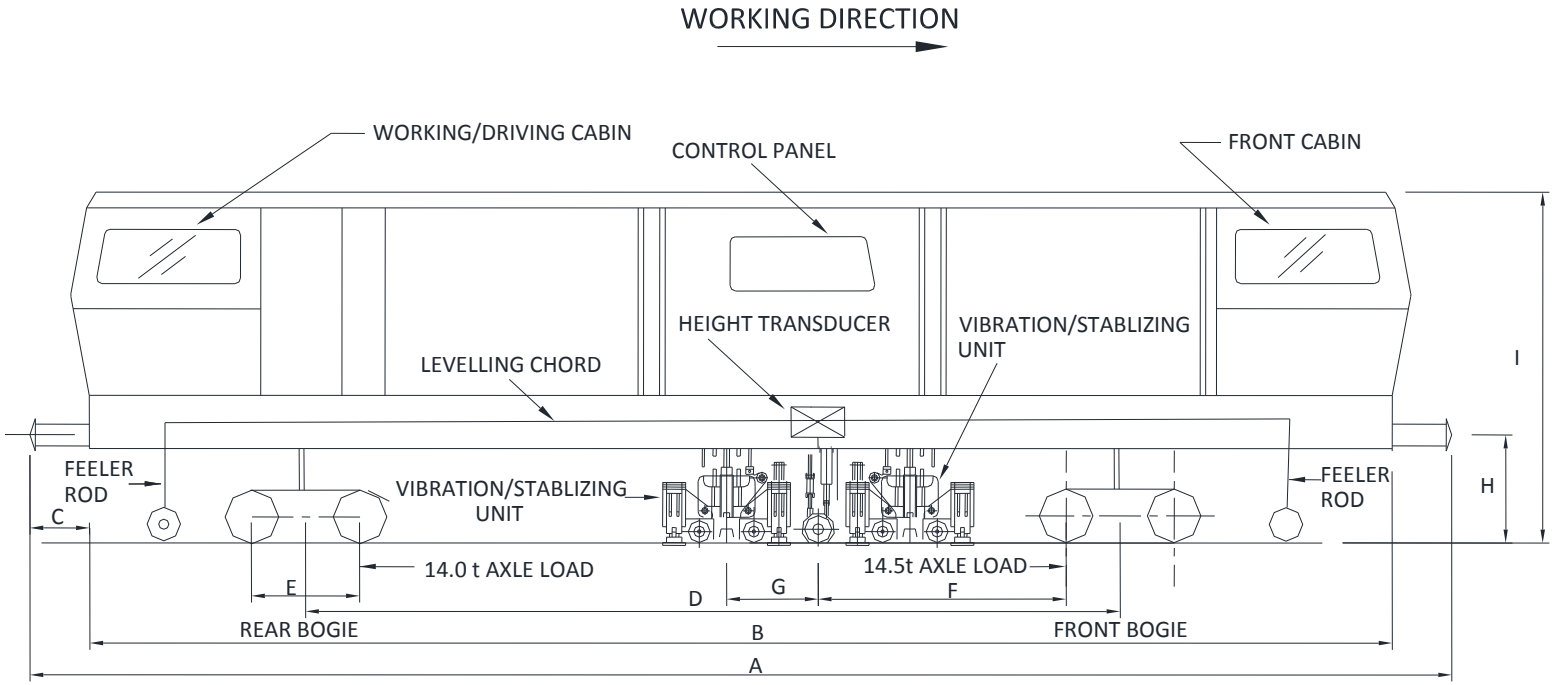

DYNAMIC TRACK STABILIZER (DTS)

NAME OF MACHINE	A	B	C	D	E	F	G	H	I	WHEEL DIA	AXLE LOAD	WIDTH	REMARKS
DTS/BHEL	18066	16800	633	11200	2200	–	–	1092	3930	1000	20t	2850	2 VIB. UNIT
DTS/MATEX	18270	17000	635	13000	1830	–	–	1105	3815	860	15t	2900	3 VIB. UNIT
DGS-62N/PLASSER	17250	16010	620	12000	1500	–	–	1105	3790	730	14.5t	2800	2 VIB. UNIT

ALL DIMENSIONS ARE IN mm.

CHAPTER 3

BALLAST CLEANING AND HANDLING MACHINES

301 General - Ballast cleaning and handling machines are used for handling of ballast during various maintenance and renewal operations. These machines are broadly categorized as:-

(1) Ballast Cleaning Machines (BCM) – for screening of ballast.

(2) Shoulder Ballast Cleaning Machines (SBCM) – for screening of shoulder ballast.

(3) Ballast Regulating Machines (BRM) – for redistribution and profiling of ballast.

The function of the Ballast Cleaning Machine is to carry out screening of full cross section of track ballast by excavating existing fouled ballast and then putting back clean ballast back in track, simultaneously disposing muck. This results in improvement of track resilience, drainage of track and elasticity of the ballast bed.

Shoulder Ballast Cleaning Machines are used for cleaning of only shoulder ballast (beyond sleeper edge) by excavating and screening of ballast and removal of muck for improvement of drainage of track.

Ballast Regulating Machines are meant for re-distribution of track Ballast and profiling of ballast along the track.

302 Ballast Cleaning Machines (BCM) - BCM loosens and excavates full section of fouled track ballast from crib, below sleepers and shoulders, collects it by continuous movement of endless cutter chain with fingers, depositing it to a set of vibrating screens, where muck is separated and thrown out by a waste conveyor and the screened/clean ballast is transferred back to the track through chute.

The main functions of BCM are:

(1) Screening of fouled ballast and disposal of muck away from track.

(2) Restore clean ballast cushion, thereby improving the elasticity (resilience) of ballast bed.

(3) Provide cross slope of formation.

(4) Improve drainage of track.

General layout and important units of Ballast Cleaning Machines are shown below:

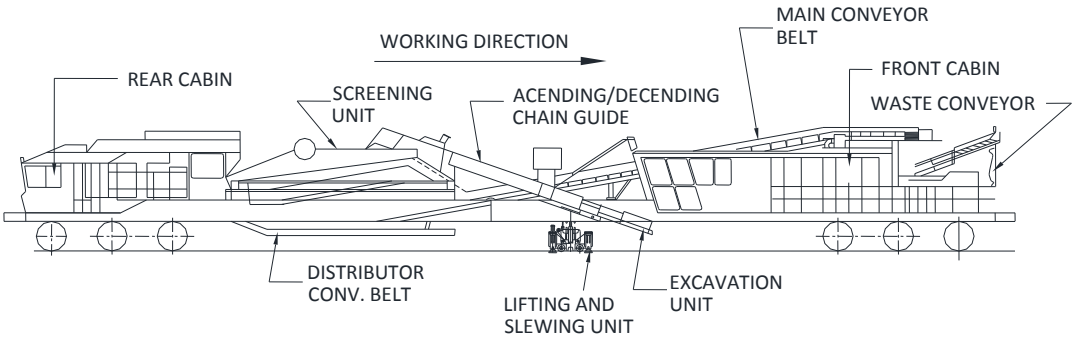

BALLAST CLEANING MACHINE

Fig. 3.1

303 Important Assemblies of Ballast Cleaning Machines

(1) **Engine -** The machine is powered by two independent air-cooled diesel engines. The front engine powers the hydraulic pumps for all conveyor belt drives, lifting movements and the hydraulic propulsion, both in working and travelling modes. The rear engine provides power for hydraulic pumps for the excavation chain drive and the screen drive and also powers the hydraulic propulsion for travelling.

(2) **Excavating unit -** The excavating unit consists of endless scraper (cutter) chain consisting of scraper blades with carbide/steel fingers with tip attached to shovels with links and bolts. Endless chain is formed by connecting two parts of the chain – the cutter bar chain piece placed below the sleepers and main chain connected with the drive. Cutter bar assembly for guiding cutter chain is located between the bogies and moves under the track (sleepers) while working. Cutter chain is guided over the elbows and troughs fitted with wear plates to carry the ballast to the screening unit. The trough is connected to hydraulic cylinders for desired transverse and vertical positioning to set the cutter chain precisely at the desired excavation depth and adjust the slope of cut to provide desired formation drainage.

The excavating unit is designed in such a way that the full ballast profile is handled in one working pass. However, the ballast towards the toe has to be pulled in manually beforehand towards the central portion over the sleepers and cribs. In the present model of machine, excavating chain has 82 scraper shovels and 82 intermediate links. The chain speed is variable with speeds varying from 1.8 to 4.0 meters per second. Scraper shovel is fixed with 2 or 5 scraping fingers depending on model of the BCM.

(3) **Screening unit -** The screening unit in the present model of machine has screen area of around 21 m^2 with screens of three square mesh sizes viz. 80 mm, 50 mm and 28 mm. These are vibrated by hydraulically driven rotating flyweights. Screening unit can be kept in horizontal plane on super-elevated curves by the operator-actuated controls. The top screen segregates oversized ballast and the bottom screen removes the muck. Middle screen helps to reduce the load on the bottom screen.

(4) **Conveyer system for distribution of ballast and disposal of muck -** The clean ballast is directed through two chutes back to the track near both the rails, through distribution conveyors. These conveyers, which drop the ballast in the rear of the cutter chain, can be swung horizontally to distribute the ballast properly in the sleeper crib and area under the sleepers.

Muck is collected on the waste conveyor belt underneath the screening unit, which carries it to another hydraulically adjustable belt controlled from the cabin. The waste is discharged outside the track by means of the waste conveyor, which can be moved horizontally and vertically and can throw the muck to a distance of up to 7.5 m away from the track.

(5) **Track lifting and slewing unit -** A track lifting and slewing unit is located next to the cutter bar for adjusting the excavation depth and for avoiding the obstacles.

(6) **Recording unit -** Computerized recorder is provided on the newer version of BCM (RM80 92U), which records the following parameters:

(a) Cross level before excavation of ballast.

(b) Cross level after excavation of ballast.

(c) Longitudinal level of left and right rails.

(7) **Brake system -** Following brake system are provided on BCM:

(a) **Direct brake:** This brake is applied directly on the machine while running itself. One hand operated brake valve is provided on each driving seat (3nos).

(b) **Indirect brake:** This brake is used for application on machine and coupled camping coach/ wagon while running. One hand operated brake valve is provided on each cabin.

(c) **Emergency brake:** This brake is used for application in case of emergency on machine and coupled camping coach/ wagon when connected through KE valve while running. It may be applied on machine only when KE valve is enabled.

(d) **Parking Brake**: Hand operated brake systems are provided for stabling.

(e) **Safety Brake:** This brake is applied automatically on the machine when air system pressure drops below 3.5 bar.

304 Types of Ballast Cleaning Machines - Three types of ballast cleaning machines are presently available on Indian Railways:

(1) **Plain Track Ballast Cleaning Machine (RM80) (Plasser India) -** This machine is capable of deep screening of plain track only and is not capable of working on turnouts. Scraper blades of excavating chain are fitted with 5 scraping fingers. The important dimensions of the machine are shown in sketch at **Annexure-3.1.**

(2) **Points and Crossing Ballast Cleaning Machine (RM76) (Plasser India) -** This is capable of deep screening of plain track as well as points and crossings without dismantling any component of points and crossings. For screening of points and crossings, which have longer sleepers, there is provision for extension of cutter bar by using 8 units of extension pieces, each 500 mm long; thereby providing for the maximum excavation width of 7.72m.

Blades of cutting chain of this BCM are fixed with 2 scraping fingers. The important dimensions of machine are shown at **Annexure 3.2.**

(3) **Plain Track and Points & Crossings Ballast Cleaning Machine (RM80 92U) (Plasser India)** This machine is similar to RM76 model except that it can handle heavier track structure with ease. The total excavation width of the cutter chain is 7.78 m, achieved by 7 extension pieces. Scraper blades are having 5 scraping fingers, in place of 2 in case of RM76. The important dimensions of machine are shown at **Annexure 3.2.**

305 Working Principle and Capability of Ballast Cleaning Machines - The excavating chain, having pentagon shape, cuts the ballast bed and carries the ballast and muck through the chain-guides to the screening unit. The vibrating screen with linear vibration effects separation of ballast from over/undersized ballast particles (muck). Underneath the vibrating screen, the muck falls on a main conveyor belt, which carries it to a slewable waste conveyor belt (which can be folded during travel), disposing the muck outside the track. Clean ballast is led to the distributor conveyor belts, from where it is distributed over the entire ballast profile.

(1) Excavation width - The excavation should ideally cover full ballast width to screen the entire cross section of ballast for proper drainage as shown below:

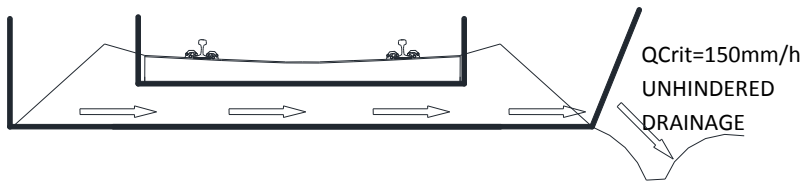

Fig. 3.2

Total width of excavation depends on size of cutter bar used. Two sizes of detachable cutter bar are 1900 mm and 2150 mm achieving cutting width of 4030 mm and 4280 mm respectively as shown below:

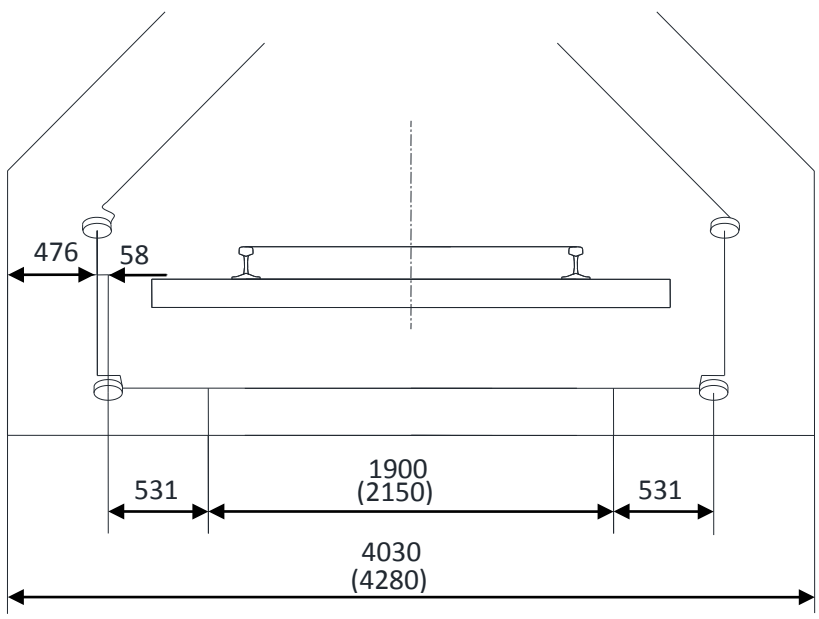

Fig. 3.3

The desirable width of ballast bed at the formation level can be calculated by standard ballast profile for LWR. Since cutter bar cannot excavate full width of desirable ballast bed, pulling the ballast, a day or two prior to screening, from the toe towards the center, and heaping it on the sleepers and ballast crib area is

necessary. Other option is to separately screen this ballast either using shoulder ballast cleaning machine or manually. Normally, the width required at site for linking and opening cutting chain is approximately 5000 mm. However, the machine has a provision to fold the elbow and total width required can be reduced to less than 4500 mm, by proper planning and use of this arrangement. For deep screening at locations where the clear width available is 4500 mm like concrete and PSC Girder bridges and where linking/delinking of cutter bar over bridge or at other restricted locations may be required, cutter bar of 1900 mm should preferably be used to get more margin for such linking and delinking.

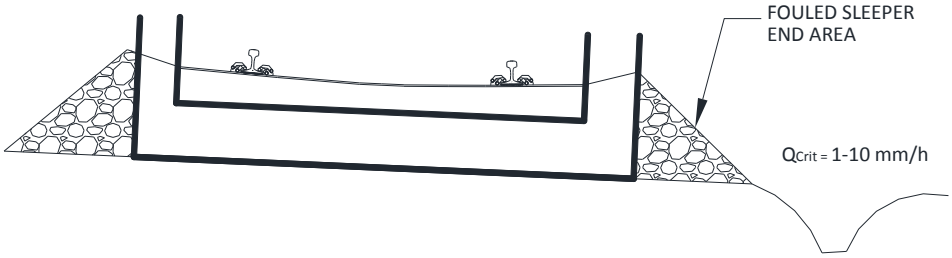

Fig. 3.4

For deep screening of points and crossing, extension pieces of 500 mm each along with chain links are added to increase excavation width up to 7.78 m (Approx.), for deep screening of additional width of points and crossing.

(2) Excavation depth - Depth of ballast cut by cutter bar is about 280 mm approximately. By keeping the top of cutter bar 20 mm below the sleeper's bottom, minimum depth of excavation works out to be 300 mm approximately. The depth of excavation can be adjusted by lifting the track using the arrangement provided in the machine while screening. It is desirable that the depth of screening should be so adjusted that the formation is not cut.

(3) Lifting and slewing of track - Lifting of track up to 100 mm and slewing up to ±300 mm in one pass can be achieved by machines presently available on Indian Indian Railways.

(4) Disposal of muck - The retractable waste disposal conveyor belt can swing by 70° in both directions in machines presently available on Indian Railways. It extends to maximum 5 m from centre of track and is capable of disposing off the muck along the cess at a distance of about 7.5 m from the centre of track.

(5) Screening capacity of BCM - The machine presently available on IR can handle excavated material up to 550 cum in an hour. If the ballast quantity in track is more, speed of longitudinal movement of machine has to be reduced to ensure proper screening.

(6) Controlled ballast distribution - The screened ballast is brought back to track through distribution conveyor belt. The ballast falling through conveyor belt can be distributed by lateral swaying the distribution conveyor belt. There is a ballast guide plate over the screen to guide the ballast on one or the other side as shown below.

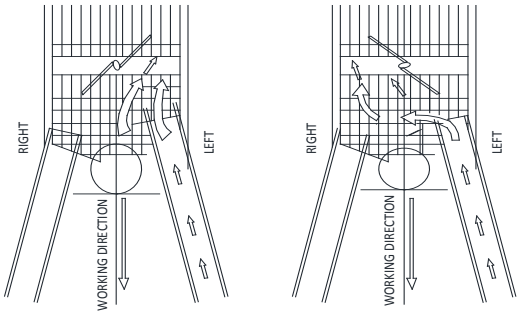

Fig. 3.5

The orientation of these guide plates can be adjusted to drop more ballast on one of the sides; like on outer side of curve.

(7) Total excavation - BCM also has the facility to throw away entire ballast along with muck. It can be done by retracting the ballast guide plate completely, making the excavated material to fall directly onto the main conveyor belt as shown below. From main conveyor belt, it is disposed outside by waste conveyor belt.

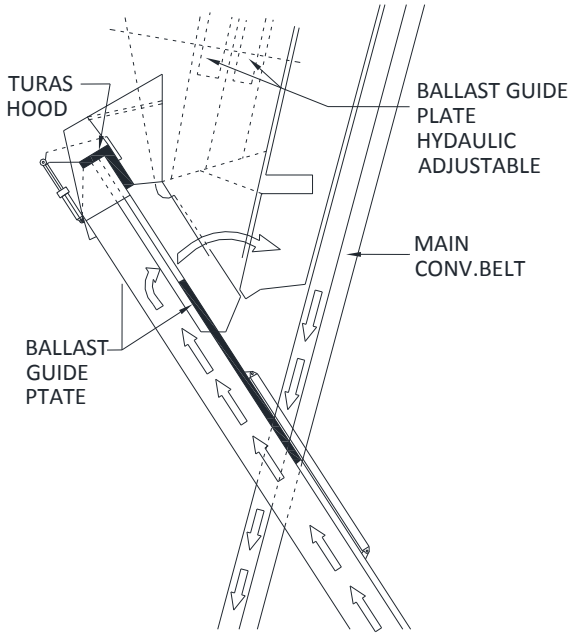

Fig. 3.6

The change of mode from cleaning operation to total excavation is possible during working operation also.

(8) Deep screening of Points and crossing - Deep screening of points and crossing can be done by BCM model RM76 and RM 80-92U by increasing the cutting width by attaching extension pieces, each 500 mm long. This extension is possible only on the right hand side (descending trough side) with respect to direction of working of machine as shown below.

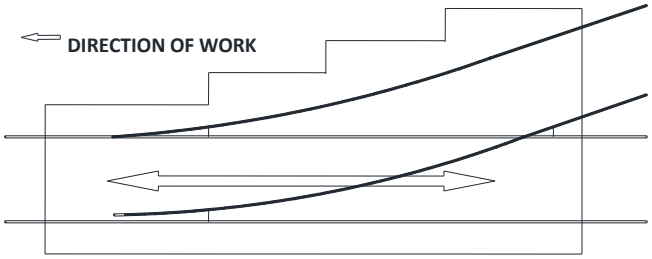

Fig. 3.7

Since, the direction of machine working cannot be changed frequently, the machine shall have to work on the main line or on turn out side depending on the direction of working as shown below:

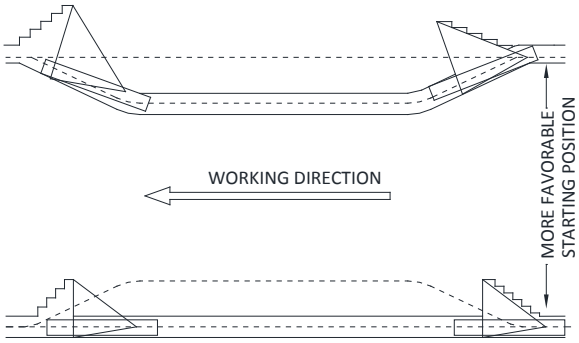

Fig. 3.8

It can be considered, to attach two extension pieces together to save time in the block, if feasible.

Since entire length of ballast bed of points and crossing, in case of a crossover cannot be excavated/ screened by BCM, it is desirable to do the leftover sleepers in the same block manually, so as to have homogenous track resilience. Not doing this manual deep screening may cause deterioration of running.

Distribution of screened ballast can be controlled by suitably aligning the ballast guide plate as shown in Fig 3.9 and Fig 3.10

(a) Working direction from switch to crossing

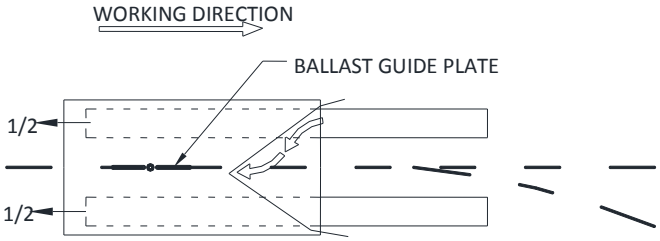

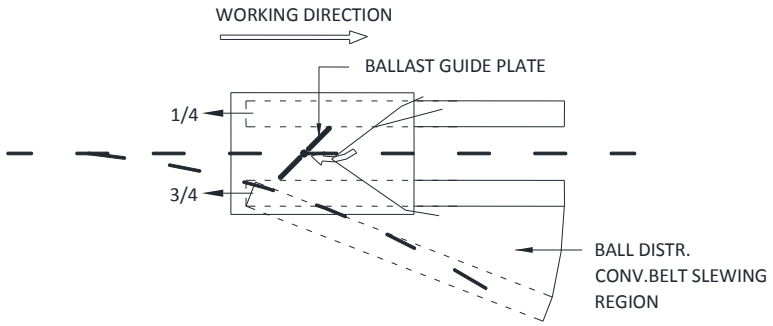

Fig. 3.9

(b) Working direction from crossing towards switch

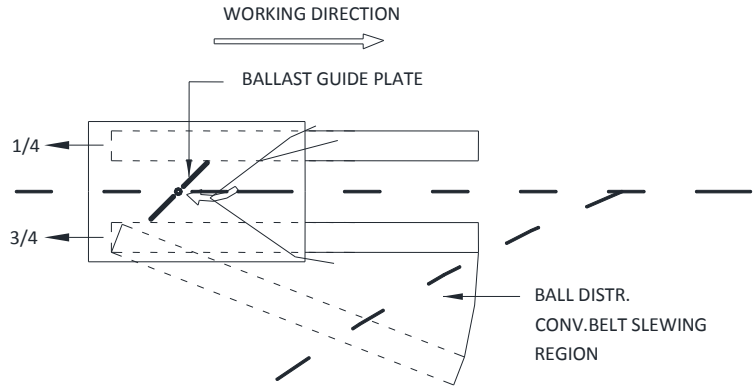

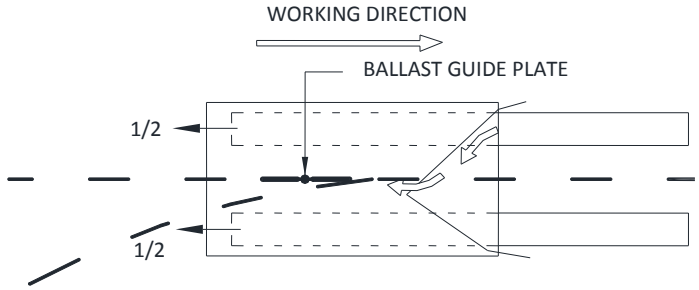

Fig. 3.10

306 Works required before, during and after deployment of Ballast Cleaning Machines - Normally a tamping machine and a DTS should work along with Ballast Cleaning Machine in the same block. It is preferable to deploy more than one BCM along with at-least one tamping machine and a DTS to effectively manage the length of track under speed restriction.

The appropriate working scheme for deployment of more than one BCMs, should be decided beforehand and made known to all concerned to plan and undertake all activities before, during and after working accordingly".

(1) Introduction of Ballast Cleaning Machines for plain track and turnouts - Before undertaking screening of track ballast, advance planning and fulfilment of pre-

requisites are necessary to ensure work of good quality. A detailed project report shall be prepared duly incorporating location specific needs covering the following aspects:

(a) A field survey should be carried out to:

(i) Determine existing profile of track, formation and availability of clean and caked ballast cushion, to assess ballast recoupment requirements.

(ii) Take census of hogged and battered joints, if any, which may require end cropping or reconditioning etc.

(iii) Take census of broken and damaged sleepers.

(iv) Make assessment of cess repairs required.

(v) Plan for improvement of track drainage.

(b) The proposed longitudinal profile should be finalized as per the relevant provisions in the **Indian Railways Permanent Way Manual** and **Schedule of Dimensions.**

(c) Longitudinal section, showing formation level, existing and proposed rail levels should be plotted on a graph sheet either manually or using suitable software.

(d) If the total (clean and caked) ballast cushion is less than 250 mm, cutter bar may cut the formation and form a channel under the track. Therefore, cutting of formation is to be avoided. If the cushion is less, the track can be temporarily or permanently lifted up to 100 mm by BCM itself during working to avoid cutting of formation. Lifting would have to be examined and carried out in consultation with electrical department as per the OHE clearance as also the other clearances available. Total ballast requirement should be calculated taking into consideration proposed lifting. The beginning and the end of transition as well as circular curves should be marked preferably by permanent reference pillars. These pillars should also be installed at every 30 m along the track and documented for future reference for alignment as well as levels. OHE masts can also be used for reference markings and documented with intermediate pillars.

(e) Foot to foot survey of the section shall be conducted to see the condition of track components, and availability of land for disposal of muck.

(f) Efforts should be made to identify locations having obstructions in the track, visible as well as hidden, (in a width of 4500 mm) by using the information in section register (for boulder/rubble dumped for restoration of breaches), detection of cables, rail pieces, signal, OHE and other foundations, so that action for clearing of obstructions can be planned to ensure obstruction free working and good output of BCM. Pucca drain walls etc., if infringing, should be dismantled, if the track cannot be slewed temporarily.

(g) Necessary action should be taken for permanent or temporary removal of obstructions beforehand. If it is not feasible to remove certain obstructions, work in those locations will have to be done manually along with the machine work.

(h) All broken and damaged sleepers should be replaced.

(i) Necessary attention to hogged/battered joints is given, as required, by end cropping or reconditioning etc.

(j) Approaches to bridges, which cannot be screened by the machine, should be screened manually in advance or along with the machine working.

(k) Number of BCM and other machines to be deployed to work together, stabling location of machines, station from which it will move to the work-site, station to which it will clear after the work, duration of blocks, lighting arrangements if working at night etc., have to be planned in sufficient details and informed to all concerned.

(l) Co-ordination with other departments

(i) Operating department: for planning and arrangement of line blocks and other details as above to ensure optimum utilization of tamping machines.

(ii) Electrical department: for availability of OHE staff, as required.

(iii) S&T department: for availability of signal staff for disconnection, reconnection etc. as required, particularly for the work of protection to cables, removal and refixing of axle counters and screening of points and crossing.

(2) Preparatory works

(a) Adequate arrangements for regular supply and training out of ballast shall be ensured commensurate with BCM progress.

(b) The pockets of the ballast beyond the reach of cutter chain shall be pulled in its cutting width before commencement of deep screening.

(c) In electrified section, distance of foundation of mast from track centre will have to be accurately measured to ensure free movement of cutting chain.

(d) Any signal rodding, cable or OHE connectors, which is likely interrupt the work, should be temporarily removed.

(e) Level crossings should be opened in advance so as to enable machine to work, and any infringement in cutting zone on road of LC shall be identified & removed prior to block. Sleepers should be arranged for replacement of unserviceable sleepers at level crossing.

(f) Sleepers should have all the fittings intact so that no sleeper becomes loose and come in the way of cutter chain while the ballast is being excavated.

(g) Gas cutting equipment and concrete breaker should be available at site to cut any obstruction like rail pieces, pipes, buried foundations etc., which might get entangled with and obstruct the cutting chain.

(h) Spoil disposal units (i.e. special type of wagons), should be arranged for attachment with the machine while working in station yards having multiple lines, cuttings, tunnels where dumping of the spoil along the cess is not feasible. If waste is to be disposed off across any adjacent track, the adjacent track shall also be blocked for traffic.

(i) A trench of 30 cm depth and around one meter width should be made for lowering cutter bar by removing one sleeper or re-spacing the sleepers for insertion of cutter bar in track.

(j) While working in LWR territory, Provision of **Manual of Instructions on Long Welded Rails** should also be followed. Temporary de-stressing at higher/lower temperature may be done to avoid building-up of excessive stress, as the lateral ballast resistance of track reduces substantially after the screening.

(k) Arrangement and placement of engineering speed Indicators should be done as per IRPWM provisions prior to start of work and also as the work progresses.

(3) Operations during traffic block

(a) It should be ensured that S&T and electrical staff are available as necessary.

(b) Protection of worksite and safety of staff working in the vicinity of machine shall be ensured. Hooter shall be available at site in addition to that provided on the machines to forewarn staff about approaching train on adjacent lines.

(c) When the machine reaches site, the cutter bar unit shall be lowered in the trench, and both ends of cutter bar connected to guides through links. If the cutter bar is already at site (left outside the track after previous block), it may be inserted before the machine reaches the site after taking all necessary precautions.

(d) When the machine starts working, one person should move with the machine on either side, to watch for any obstruction to cutter chain, so as to arrange for stoppage of the machine immediately.

(e) If the machine stops moving during work, it should be ensured that gates for clean ballast below screen are instantly closed to avoid heaping up of excess ballast at one location.

(f) BCM working requires manpower for activities like insertion and removal of cutter bar, filling up of ballast behind BCM etc. Sufficient manpower shall be deployed so that the progress of BCM is not affected on this account. In case of non-deployment of tamper behind the BCM, e.g. deep screening of points and crossing etc., additional manpower shall be deployed for manual packing of track for train running after the block. In exceptional cases of delay in

arranging the tamper, manual packing may be required to raise the speed to 40-45 kmph.

(g) Screening should be stopped well before expiry of traffic block to permit proper winding up of BCM, tamping, consolidation by DTS, if deployed and movement of machines to the station. Before clearing the block it should be ensured that the cutter bar is removed, sleepers re-spaced correctly, ballast filled and packing done in the cutter bar location.

(h) Ramp shall not be located in location like LC, girder bridge approach or transition of curve. Ramp should be kept away from such locations by minimum two rail lengths,

(i) In case of malfunctioning of tamping machine, BCM working shall be stopped and track, which has not been tamped, shall be attended manually before opening for traffic with speed restriction as per provisions of IRPWM.

(j) Proper profiling of ballast in cribs and in shoulders should be done either by BRM or by deploying adequate labour during and after machine working.

(k) Utmost caution should be observed while controlling movement of waste conveyor to avoid hitting against electrical mast/signal post. Safety switch provided to sense the mast should, therefore, be kept 'ON' (in working condition).

(l) All the staff working with the machine must wear safety helmets, proper shoes and masks to avoid inhaling dust.

(m) In case muck disposal units are not available or cannot be used in case of multiple lines, muck should be discharged to fall on a polythene sheet placed between the lines in advance, to cover the expected length of screening. The muck shall then be filled in the gunny bags and carried away by suitable means.

(n) Machine shall be driven by front side drive cabin. Reverse driving shall not be allowed for more than 4 m.

(4) Operations after deployment of machine

(a) At the end of work, about five sleeper spaces are left without ballast. The cutter bar shall be removed from track and these sleepers filled manually with clean ballast.

(b) One round of tamping with work site tamper should be carried out immediately after deep screening in the same block with stabilization by DTS to make track fit for resumption of traffic at a speed of 40 kmph. In absence of DTS for stabilization, the relaxation of speed restriction should be made in accordance with the provisions contained in IRPWM. For Points and Crossing, UNIMAT should be used for tamping.

(c) The vertical and lateral clearances for OHE, signal post, and any other structures should be checked and adjusted before clearing the BCM block.

(d) Ballast recoupment activity should be synchronized with deep screening activity so as to enable raising speed to normal after necessary packing. This is important to reduce the length of track under temporary speed restriction.

(e) One watchman should be posted at the location where cutter bar and chain are left on cess, wherever considered necessary.

(f) Arrangement and placement of Engineering Indicators should be done as per IRPWM provisions prior to start of work and also as the work progresses.

(g) Group working of BCMs and allied machines, with training out of ballast in the same block will have to be considered as per field requirements to increase the effective utilization of block.

307 Shoulder Ballast Cleaning Machine (SBCM) - The machine is used for cleaning of shoulder ballast to improve the drainage of track. The working principal of SBCM is similar to BCM (RM-80). The machine is provided with two excavating cutter chains, one on either side moving in a vertical plane. Each chain excavates and picks up the shoulder ballast and directs it to a set of vibrating screens of sizes similar to that in BCM. Excavated muck is screened and clean ballast is deposited on shoulders of the ballast profile. The main functions of SBCM are to remove the muck from the shoulder ballast and improve the track drainage.

General layout and important units of Shoulder Ballast Cleaning Machines (FRM-85) are shown below:

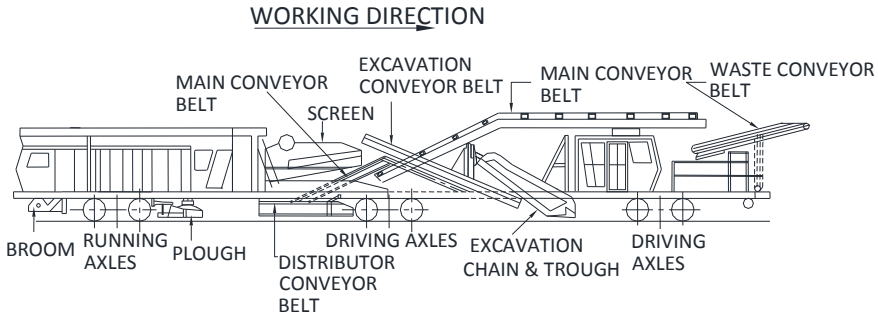

Fig. 3.11

308 Important Assemblies of Shoulder Ballast Cleaning Machines

(1) **Engine -** The machine is powered by one water cooled engine. It powers the hydraulic pumps for excavation chain drive, screen drive; all conveyor belt drives, lifting movements and the hydraulic propulsion both in working and travelling modes.

(2) **Excavating Unit -** The machine is provided with two excavating cutter chains, one on either side rotating in a vertical plane, while working. Each chain excavates and picks up the shoulder ballast and directs it to a set of vibrating screens. Each excavating chain has 43 scraper plates with two caps and 43 intermediate links.

(3) **Screening Unit -** SBCM has screening units similar to that of BCM and are of same screen sizes i.e. 80 mm, 50 mm and 28 mm.

(4) **Conveyer system for distribution of ballast and disposal of muck -** The ballast from excavating unit is carried to vibrating screen through excavating conveyor belt system. The screened ballast is distributed on shoulder by distribution conveyor belt system. The muck is disposed by the side of track via main conveyor belt through the waste conveyor belt system.

(5) **Ballast profiling plough -** One center plough is provided to profile and distribute the screened ballast.

(6) **Broom -** These are provided at the rear end and are used for cleaning sleeper and fittings and for collecting and distributing ballast.

(7) **Brake System -** Following brake system are provided on SBCM:

(a) **Direct brake -** This brake is applied directly on the machine while running itself. One hand operated brake valve is provided on each driving seat (2nos).

(b) **Indirect Brake -** This brake is used for application on machine and coupled camping coach/ wagon while running. One hand operated brake valve is provided on each cabin.

(c) **Emergency Brake -** This brake is used for application in case of emergency on machine and coupled camping coach/ wagon when connected through KE valve while running. It may be applied on machine only when KE valve is enabled.

(d) **Parking Brake** - Hand operated brake systems are provided for stabling.

(e) **Safety Brake -** This brake is applied automatically on the machine when air system pressure drops below 3.5 bar.

309 Types of Shoulder Ballast Cleaning Machines - Presently, two types of Shoulder Ballast Cleaning Machines are available on Indian Railways.

(1) **Shoulder Ballast Cleaning Machine - FRM 80 (Plasser India).**

(2) **Shoulder Ballast Cleaning Machine - FRM 85F (Plasser India).**

Both the machines are similar except that the muck in FRM 80 is thrown on the backside while that in FRM 85 is thrown in the front. The important dimensions of machine are shown at **Annexure 3.3 and 3.4**

310 Capacity of Shoulder Ballast Cleaning Machines

(1) **Width of excavation -** Normal width of excavation on either side is 1,530 mm. The minimum distance to the end of the plough from center of track is 1,790 mm extending to 3,320 mm. Thus, the excavating unit can be extended on either side to cover width up to 4150 mm from center of track.

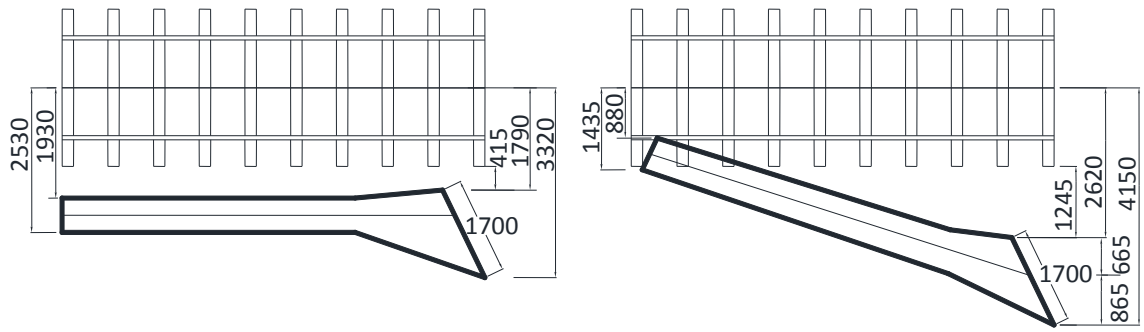

Fig. 3.12

(2) **Depth of excavation -** The depth of excavation should be regulated so as to maintain uniform continuous cross slope of the top of the formation.

(3) **Muck disposal system -** The muck is disposed by the side of track, via main conveyor belt through the waste conveyor belt system, up to maximum distance of 7.5 m from center of track.

(4) **Ballast distribution system** - The screened ballast is distributed on shoulder with the help of swiveling distribution conveyor system.

(5) **Screening capacity -** The screening capacity is 500 cum per hour.

(6) **Total excavation -** The ballast from excavating conveyor belt system can be dropped directly to main conveyor belt thus bypassing screen and can be disposed via waste conveyor belt.

311 Works required before, during and after deployment of Shoulder Ballast Cleaning Machines - The preparations for this machine are almost same as those of plain track ballast cleaning machines. In addition, following aspects should be given attention:

(1) **Operations prior to deployment of machine -** Any obstruction existing in the shoulder area should be removed.

(2) **Operations during block -** After taking the machine to the site, the operator shall set the excavating units such that they do not touch the sleeper. The depth of excavating units is set hydraulically, taking into consideration the required cross slope. Thereafter, the conveyor belt is unlocked and turned to the desired direction. Similarly plowing, grading units, conveyor belts and vibrating units are set as per the manual of the machine. It takes about five minutes for setting up the machine from drive mode to working mode. Other aspects to be watched are given below:

(a) In case of single lines, full depth of the haunches should be excavated to ensure good drainage.

(b) In case of double lines or multiple line sections, full depth of the haunches should be excavated on cess side. Between the tracks, the depth of haunch excavation should be just sufficient to provide continuity to drainage line of the cribs.

312 Ballast Regulating Machine (BRM) - These machines are used for ballast transfer, spreading and profiling operations. The machine can move ballast towards center of track or away from center of track, transfer ballast across the track and transfer ballast from a surplus zone to deficient zone.

The main features of BRM are:

(1) Regulation of ballast to achieve proper profile.

(2) Transfer of ballast from centre to outwards either on both sides or on one side only.

(3) Transfer of ballast from one side to the other or to the centre or from both sides to the centre.

(4) Sweeping the sleepers and cribs and picking up of surplus ballast in to hopper, if available and transporting it to another location.

(5) Sweeping the fasteners after ballast regulation using brooms.

This machine operates in both directions. General layout and important units of Ballast Regulating Machines (BRM Kershaw) are shown below:

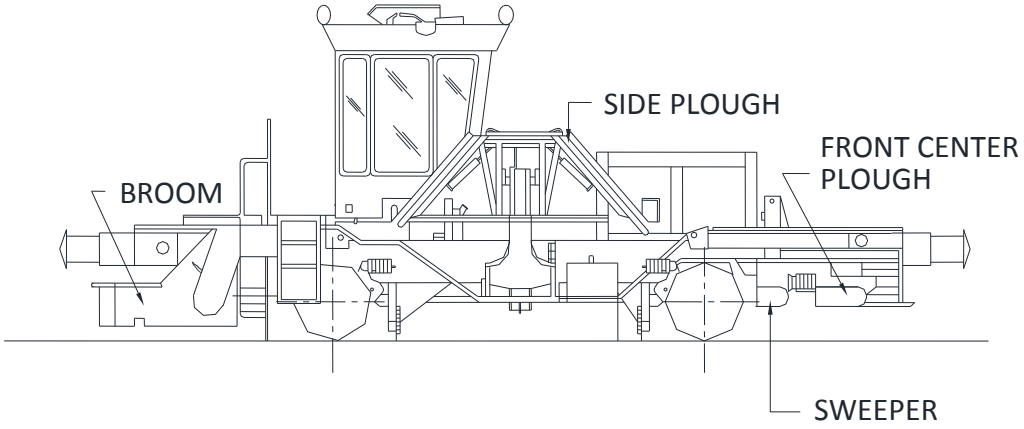

Fig. 3.13

313 Important assemblies of Ballast Regulating Machines

(1) Shoulder plough – These are attached to the sides of the machine and are hydraulically operated and controlled from the cab. These are designed to work on shoulder ballast and shift ballast from outside to inside and from inside to outside. The machine can be equipped with standard fixed width ballast wings or optional variable width ballast wings for better profile shaping.

(2) Front plough –It is placed in between rails in front portion of the machine and is used for handling ballast in between rails. The plough can be positioned from the operator's cab to plough out, plough in or to transfer ballast to either side of the track with the machine travelling either forward or backward.

(3) Centre plough - It is provided in the middle of the machine i.e. between bogies/wheels and is hydraulically operated and controlled from the cab. Like front

plough, it is placed in between rails and is used for handling ballast in between rails. Normally, a machine is provided either with front plough or with centre plough, but not both of them.

(4) Broom (Sweeper conveyor system) - It is mounted in the rear or in the middle between the bogies of the ballast regulator. It is used for track dressing operations, to remove ballast from top of sleepers, to fill under-ballasted cribs and to place extra ballast on the shoulders for final regulation and dressing. The sweeper unit consists of rotating drum fitted with flexible tubular rubber pieces of designated length and mounted inside steel plate housing. While rotating it throws surplus ballast via a guiding duct on to two lateral conveyors. In machines provided with hopper, these take ballast to a steep conveyor belt, which takes it to a hopper for collection. Broom is rotated by hydraulic motor.

(5) Hopper - Hoppers have capacity varying from 5-12 m^3 depending on the model and collect excess ballast through broom sweeper conveyor system and then places it on shoulder through chutes, where required.

(6) Rail fastening sweepers - These are provided to remove ballast from over the fastenings.

(7) Welded-on-tunnels for covering rail and fastenings - These are sturdy inverted steel troughs provided to cover the rail and fastenings area to avoid flooding of rail area with ballast at different stages of working.

(8) Brake System - Following brake system are provided on BRM Machine (PBR-400R):-

(a) Direct brake - This brake is applied directly on both bogies/axles on this machine while running by one hand operated brake valve.

(b) Indirect brake - This brake is used for application by one hand operated brake valve on machine and coupled camping coach/ wagon when connected through KE while running. It may be applied on machine only when KE valve is enabled.

(c) Emergency brake - This brake is used for application in case of emergency on machine and coupled camping coach/ wagon when connected through KE valve while running. It may be applied on machine only when KE valve is enabled.

(d) Parking brake - Hand operated mechanical brake systems are provided on one axle for stabling except Kershaw machine. On Kershaw machine dual acting brake cylinders are provided for parking as well as braking.

314 Types of BRM - Ballast Regulating Machines working on Indian Railways are classified into two categories as below :

(1) Without hopper - These machines are provided with shoulder plough, front/center plough, brooms, and conveyor belts. These are four-wheeler vehicles. Different models of BRM's working on Indian Railways are:

(a) BRM Model 66-2/56-3 and 66-4 (Kershaw).

(b) PBR 400R (Plasser India).

(c) BRM Model SPZ-210 K (Gemac Engg).

BRM Model SPZ-210 K (Gemac Engg) has centre plough while other two models have front plough. The important dimensions of machines are shown at **Annexure 3.5, 3.6 and 3.7.**

(2) With hopper - These machines have a system of collecting excess ballast from over sleeper to the hopper via broom and conveyor belt arrangement. The collected ballast is unloaded at the shoulder wherever required through a chute opening.

(a) USP 2000 SWS (Plasser India).

(b) RPB-01(Metex, Russia).

These are bogie type 8-wheeler vehicles. They are provided with center plough along with brooms provided in the middle i.e. between bogies. The important dimensions of machines are shown at **Annexure 3.8 and 3.9.**

315 Working principle and capacity of Ballast Regulating Machines - The transfer of ballast from one side to other is done by properly positioning the shoulder plough and front/center plough. The shoulder plough can transfer ballast from outside to inside and from inside to outside as shown below :

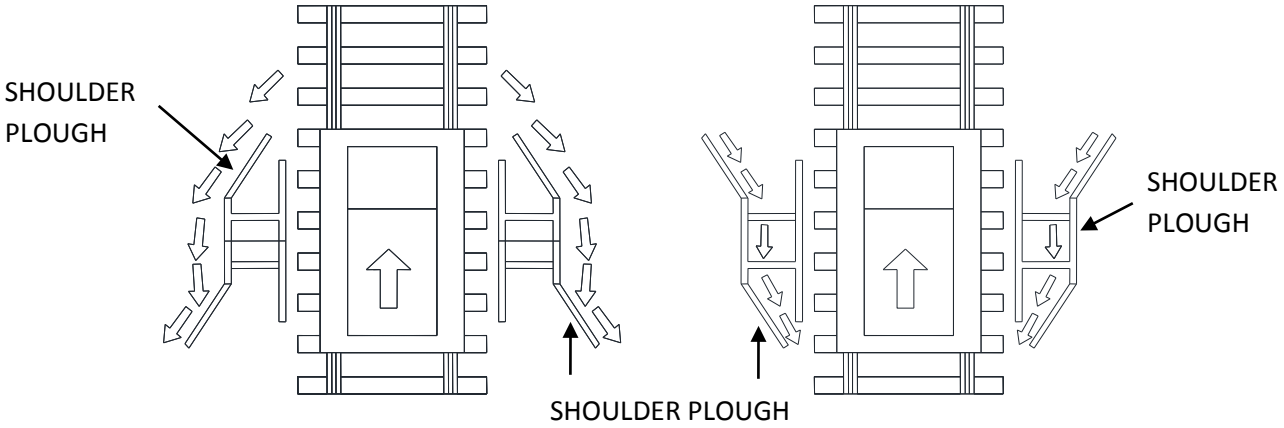

Fig. 3.14

It can also carry ballast by enclosing ballast in boxed enclosure using shoulder plough

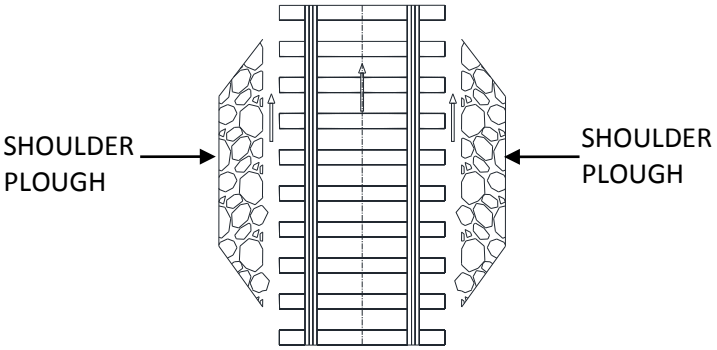

Fig. 3.15

The front plough of BRM, Kershaw make guides ballast flow as shown below:

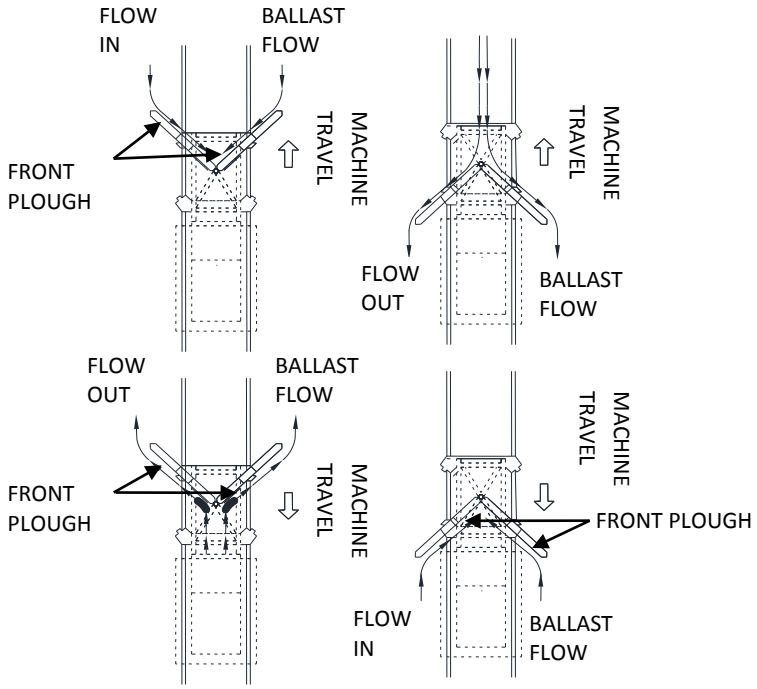

Fig. 3.16

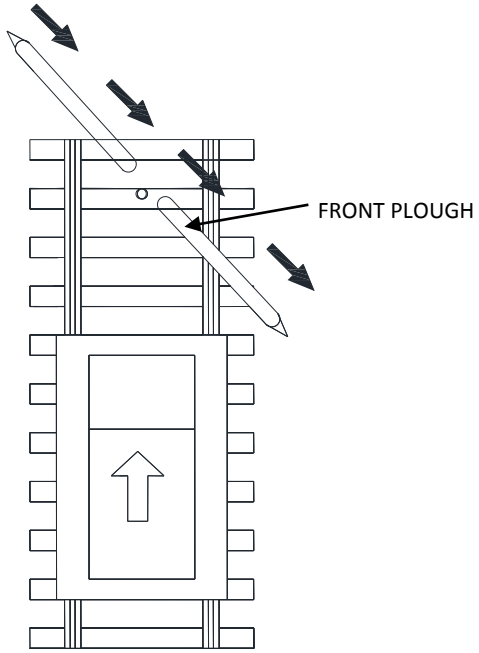

Fig.3.17

The front plough of Plasser machine guides the ballast flow as shown below:

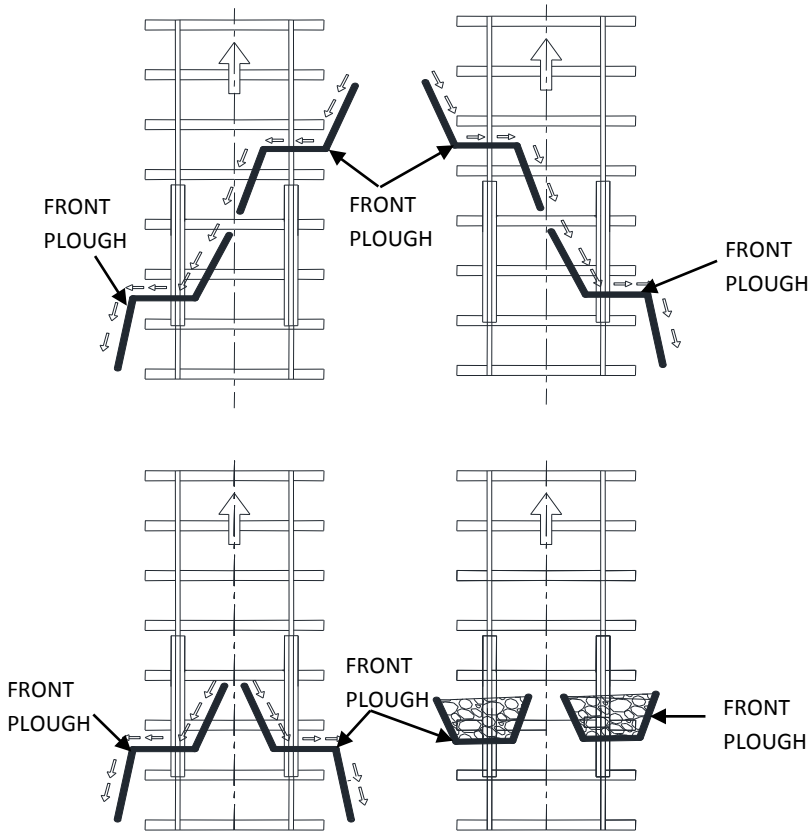

Fig.3.18

The center plough has two or four blades and it does shifting of ballast as shown below:

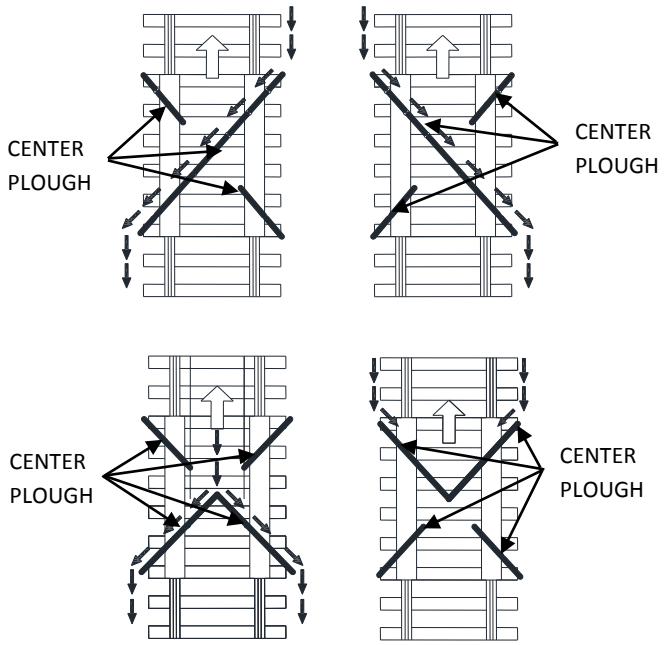

Fig. 3.19

Shoulder plough combined with front plough can be used to regulate the ballast flow from shoulder to center or other side and also from center to shoulder as shown below:

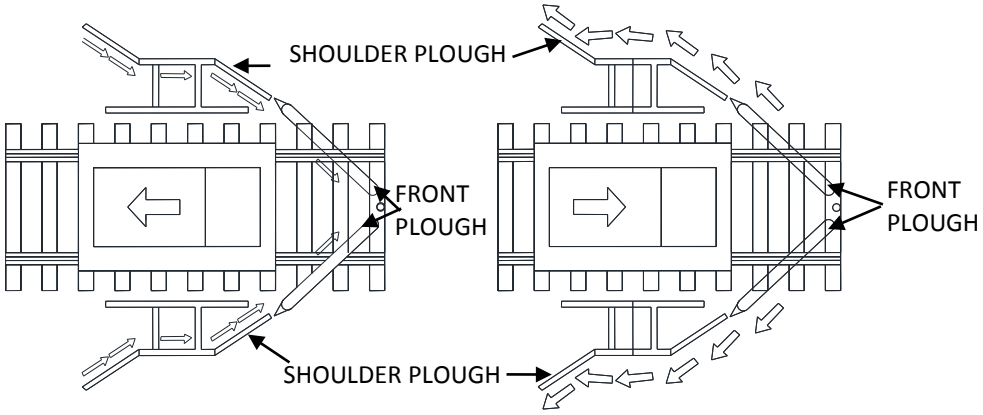

Fig. 3.20

Similarly, shoulder plough can be combined with center ploughs for transferring ballast. Behind the regulation activity, the brooms pick up the ballast from over sleepers and it is either collected through conveyor belt to hopper or distributed directly through horizontal conveyor to sides. The sweeper cleans the fittings of ballast. In machines with front plough, for dressing of the ballast left by shoulder plough on sleepers, one reverse pass shall be required. Thus two or more passes are required for complete profiling of ballast by BRM. In machines provided with center plough, only one pass should normally be required for complete profiling.

(1) The Regulation Width - Shoulder plough has a reach of up to 3.5 meter approximately from centerline of track in all machines and thus can handle ballast well beyond full ballast section of standard Indian railway track.

(2) Ballast Handling Capacity

It can handle around 2000 m^3 ballast in an hour.

316 Works required before and during deployment of Ballast Regulating Machines

(1) **Operations prior to deployment of machine**

(a) The locations of excess and deficiency of ballast should be identified. In case of overall deficiency of ballast, training out of adequate ballast at locations of deficiency, which can-not be balanced by excess ballast in adjacent stretches should be carried out.

(b) Any obstruction existing in the shoulder area, which may infringe plough (blades) of BRM, should be removed in advance.

(2) Operations during Block

(a) Adequate protection as per G & SR shall be ensured for the machine working under line block.

(b) Profiling of ballast and its shifting should be done on the basis of an advance survey of excess and deficiency of ballast.

(c) In case of double lines or multiple line sections, proper protection should be taken while using shoulder plough so as not to infringe adjacent line. In case it is likely to infringe with the adjacent line, line block for that line, for the period of infringement shall also be taken.

(d) Adequate precautions should be taken in using shoulder plough near OHE mast, Signal post or any fixed structure alongside the track to avoid any damage to these installations.

(e) While working on Points and Crossings, care should be taken, not to hit the S&T installations in switch portion by any of the BRM plough.

(f) Normally more than one pass might be required to achieve the target ballast profile.

(g) Before clearance of the block it shall be ensured that the ballast is not heaped in such a way that it is/may infringe the unrestricted movement of trains.

Annexure3.1

Important features/dimensions of Ballast Cleaning Machine (RM-80)

BALLAST CLEANING MACHINE

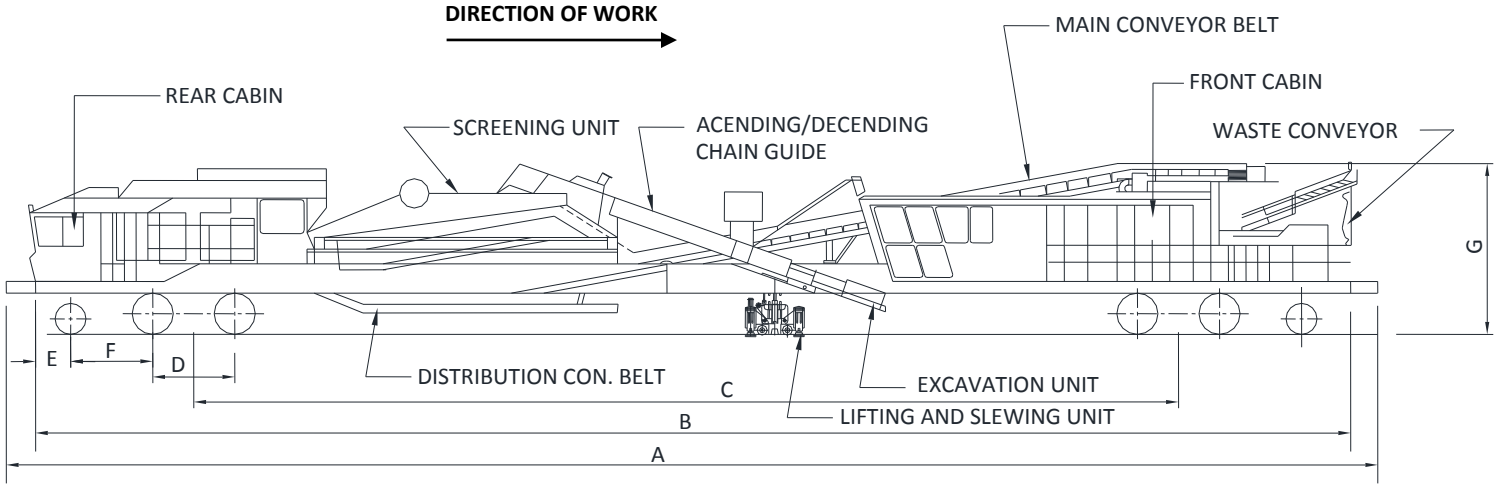

MODEL	A	B	C	D	E	F	G	WHEEL DIA		AXLE LOAD	WIDTH
								DRIVEN	IDLE		
RM-80	30600	29360	22200	1830	880	1785	4015	900	700	18.5t	3140

ALL DIMENSIONS ARE IN mm.

Annexure 3.2

Important features/dimensions of Ballast Cleaning Machine (RM-76 & RM-80-92U)

BALLAST CLEANING MACHINE

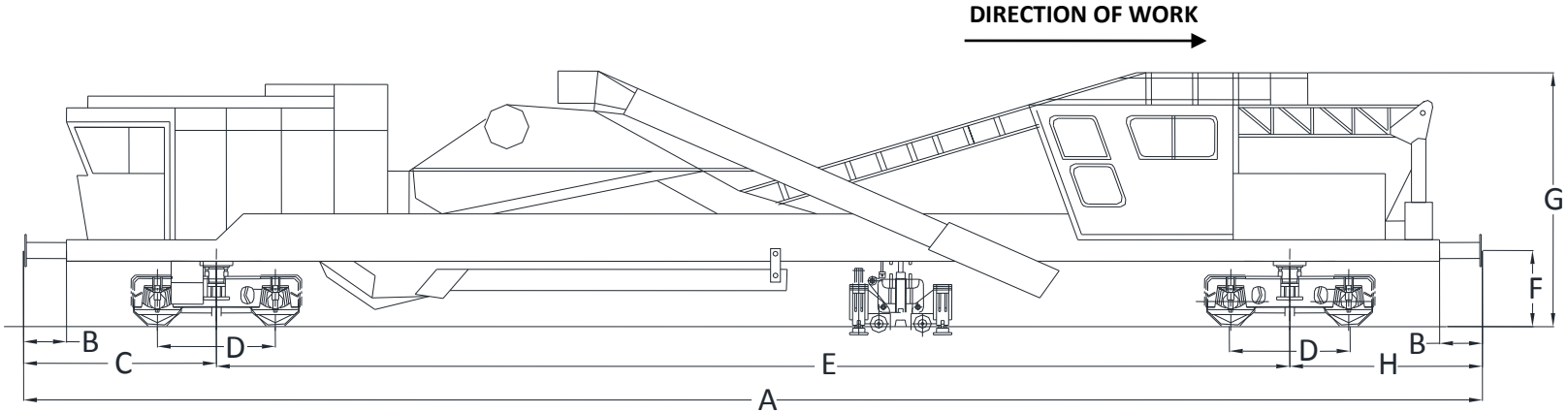

MODEL	A	B	C	D	E	F	G	H	WHEEL DIA.	AXLE LOAD	WIDTH
RM-76UHR	24730	620	2710	1830	19500	_	4015	2520	900	19.0t	3150
RM-80-92U	29540	620	3670	1830	22200	_	4015	3670	900	19.8t	3140

ALL DIMENSIONS ARE IN mm.

Annexure3.3

Important features/dimensions of Shoulder Ballast Cleaning Machine (FRM-80)

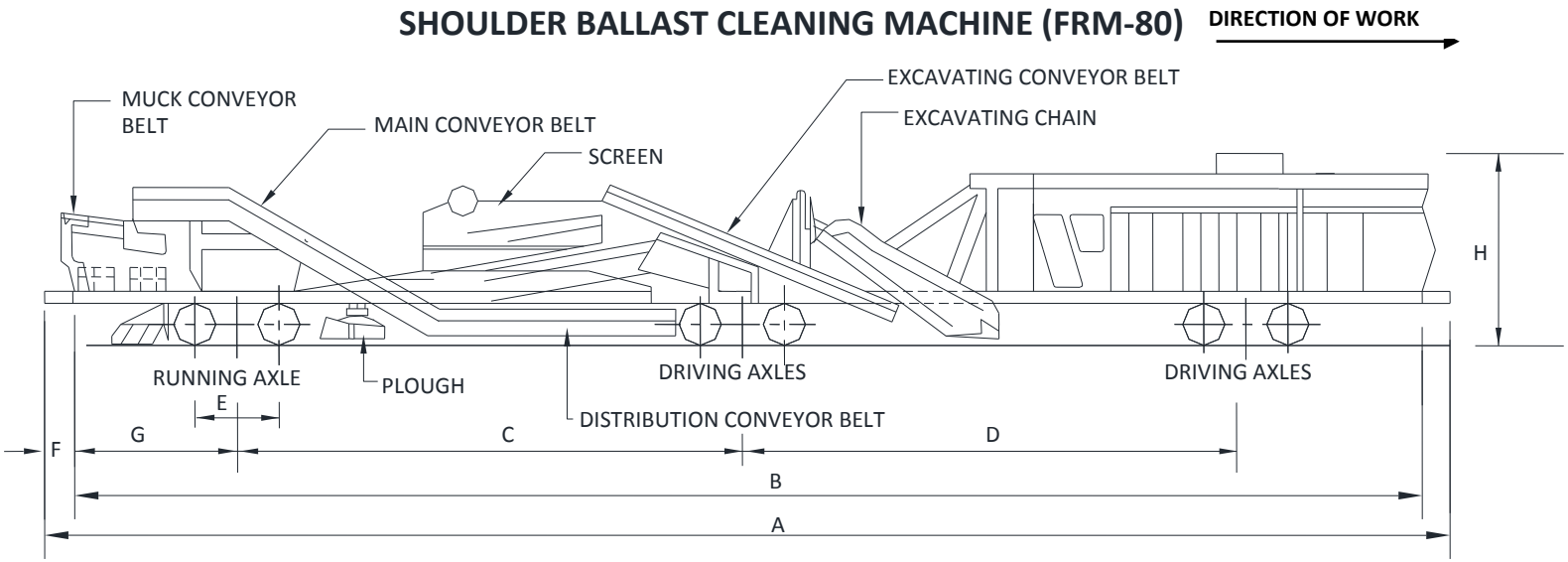

NAME OF MACHINE	A	B	C	D	E	F	G	H	WHEEL DIA	MAX AXLE LOAD	MAX WIDTH
FRM-80	39470	38200	16000	15000	1810	635	3600	4260	900	20.0t	3090

ALL DIMENSIONS ARE IN mm.

Annexure3.4

Important features/dimensions of Shoulder Ballast Cleaning Machine (FRM-85 F)

SHOULDER BALLAST CLEANING MACHINE (FRM-85)

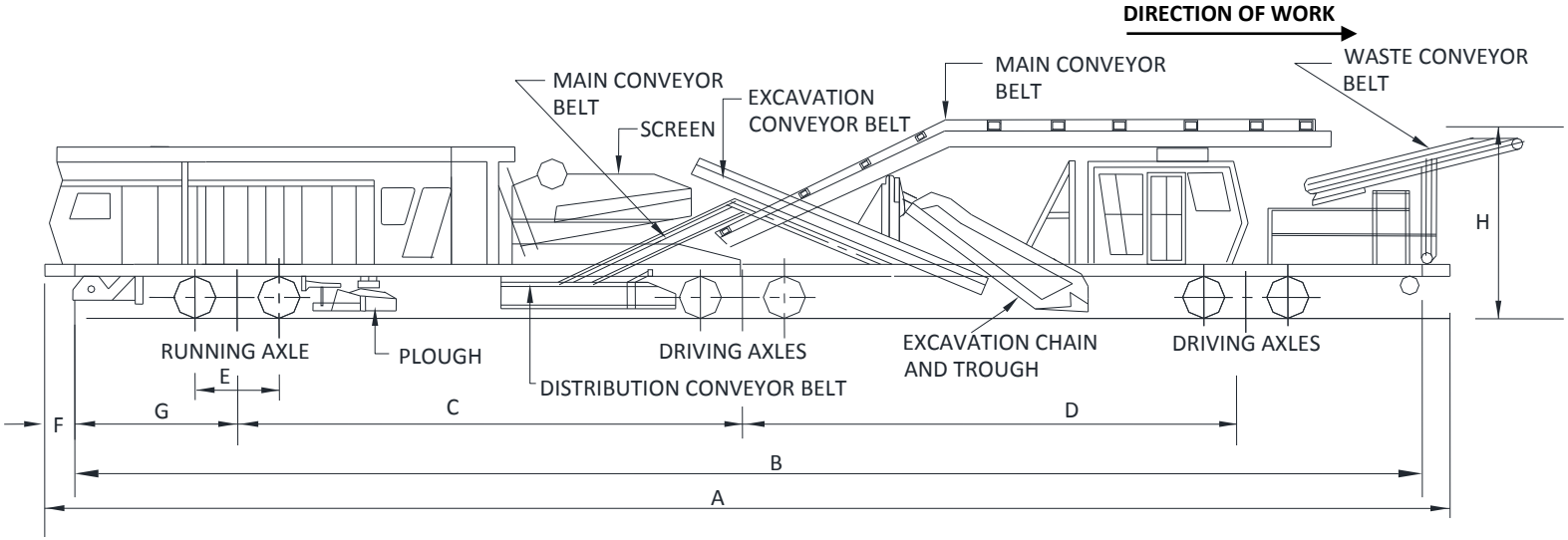

NAME OF MACHINE	A	B	C	D	E	F	G	H	WHEEL DIA	MAX AXLE LOAD	MAX WIDTH
FRM-85F	39440	38200	16000	15000	1830	620	3600	4085	900	20.4t	3090

ALL DIMENSIONS ARE IN mm.

Annexure 3.5

Important features/dimensions of Ballast Regulating Machine (Model - 56-3 & 66-4)

BALLAST REGULATOR

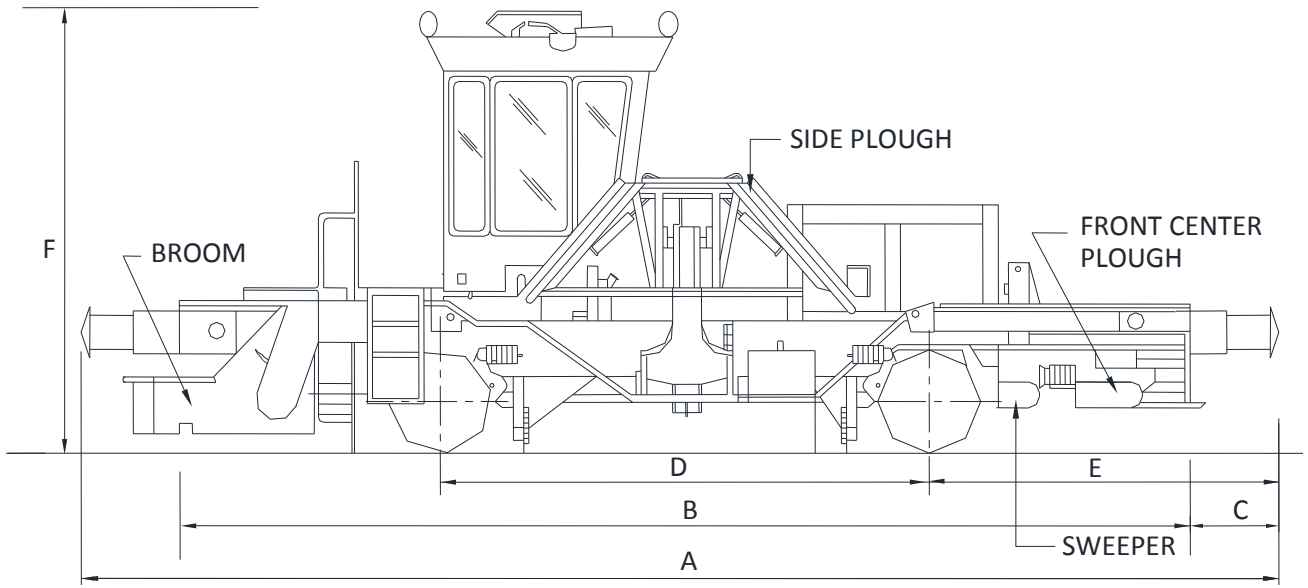

MODEL	A	B	C	D	E	F	DIA OF WHEEL	AXLE LOAD	WIDTH
MODEL-56-3	12344	11074	635	5791	3124	3810	832	12.90t	3112
MODEL-66-4	10389	9120	634.5	4725	2832	3617	838.2	10.66t	3166

ALL DIMENSIONS ARE IN mm.

Annexure 3.6

Important features/dimensions of Ballast Regulating Machine (Model BRM PBR 400R)

BALLAST REGULATING MACHINE

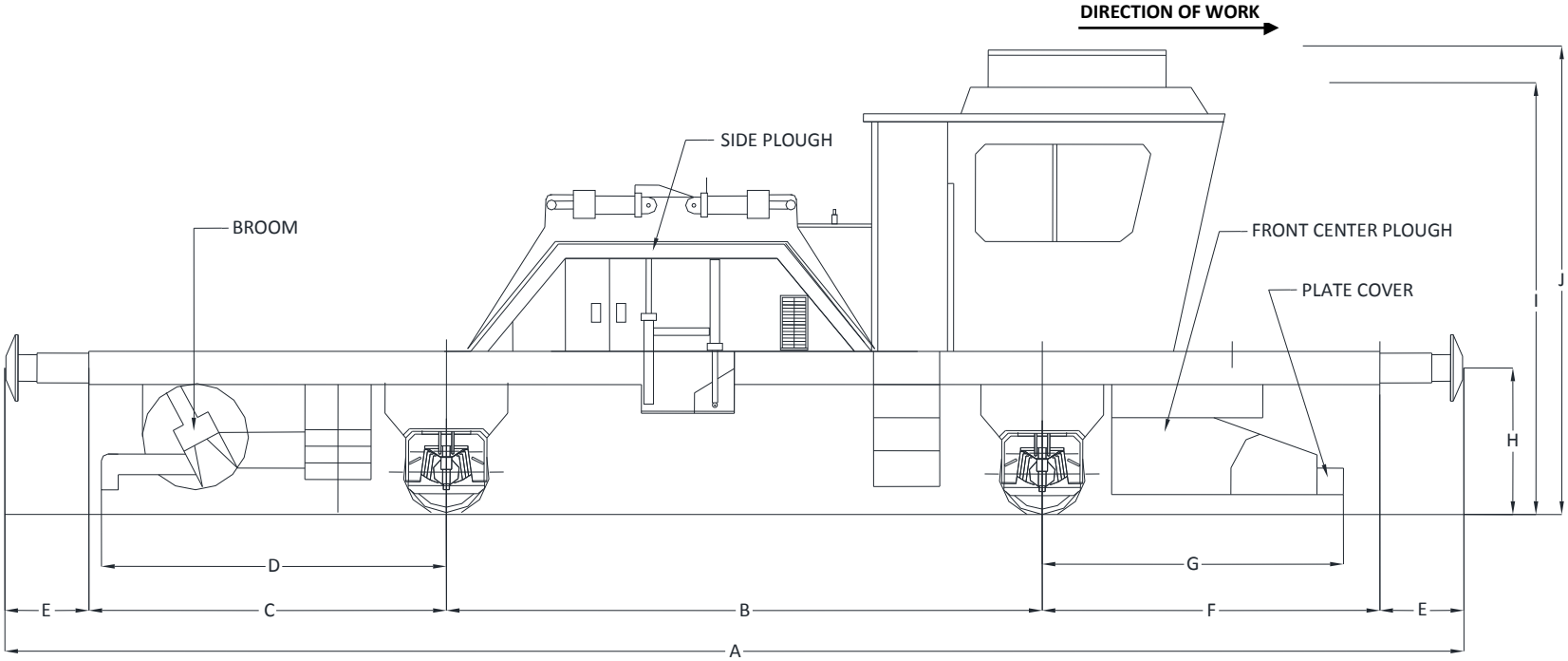

MODEL	A	B	C	D	E	F	G	H	I	J	WHEEL DIA	MAX AXLE LOAD	MAX WIDTH
BRM PBR 400R	11020	4500	2700	2605	635	2550	2275	1105	3220	3500	730	10.0t	3184

ALL DIMENSIONS ARE IN mm.

Annexure 3.7

Important features/dimensions of Ballast Regulating Machine (GEMAC)

BALLAST REGULATOR (GEMAC)

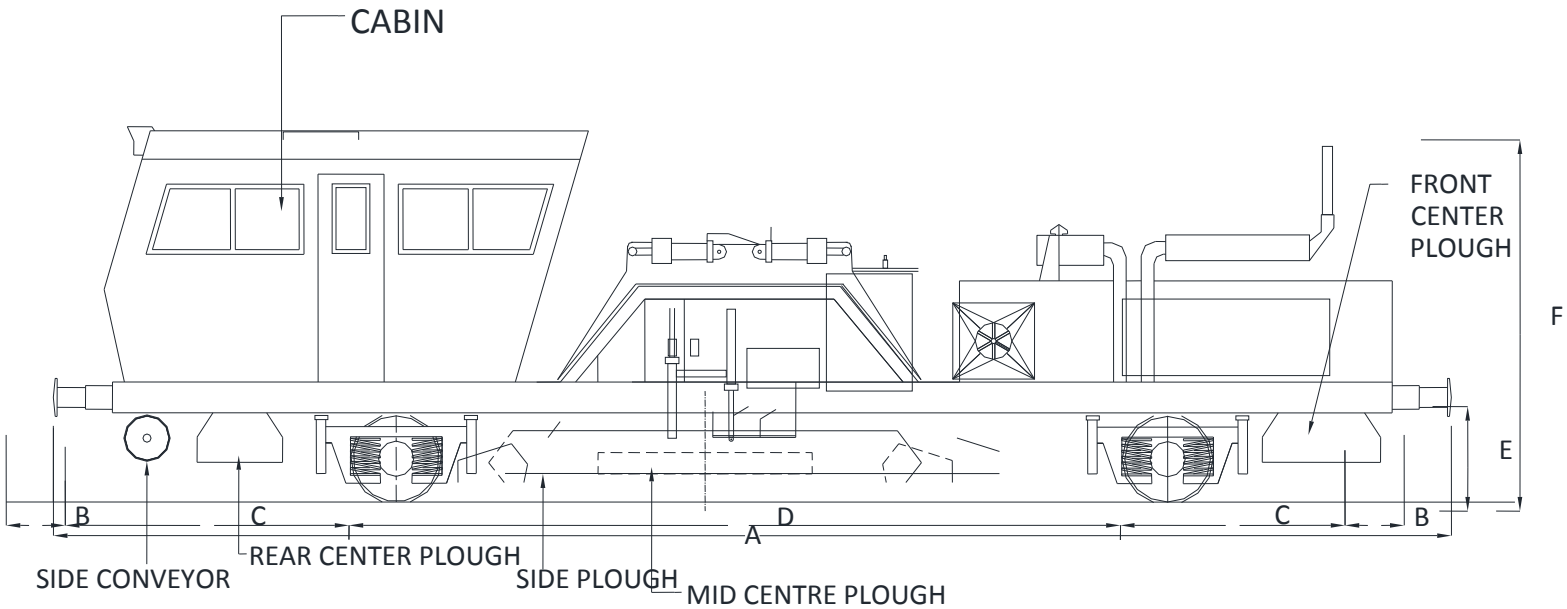

MODEL	A	B	C	D	E	F	WHEEL DIA	AXLE LOAD	WIDTH
BRM GEMAC	14780	640	3000	7500	1105	3820	915	18.8t	3080

ALL DIMENSIONS ARE IN mm

Annexure 3.8

Important features/dimensions of Ballast Regulating Machine (BRM 2000 SWS)

BALLAST REGULATING MACHINE

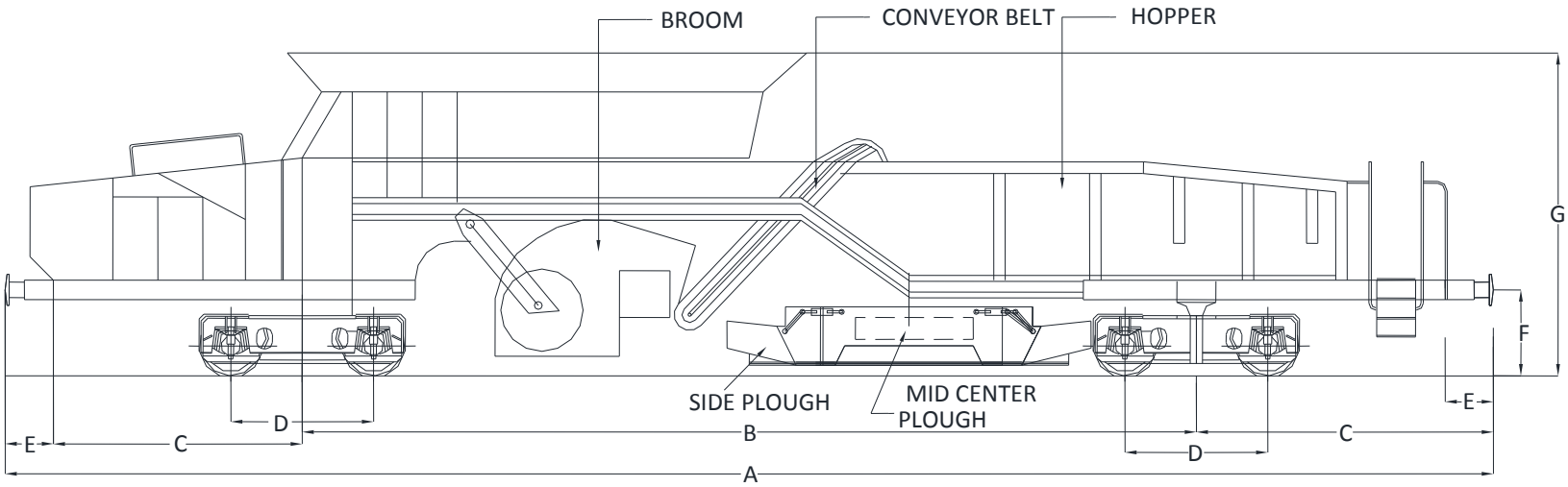

NAME OF MACHINE	A	B	C	D	E	F	G	WHEEL DIA	AXLE LOAD	WIDTH
BRM 2000 SWS	19140	11500	3200	1830	620	1105	4110	850	20.0t	3180

ALL DIMENSIONS ARE IN mm.

Annexure 3.9

Important features/dimensions of Ballast Regulating Machine (BRM METEX)

BRM METEX

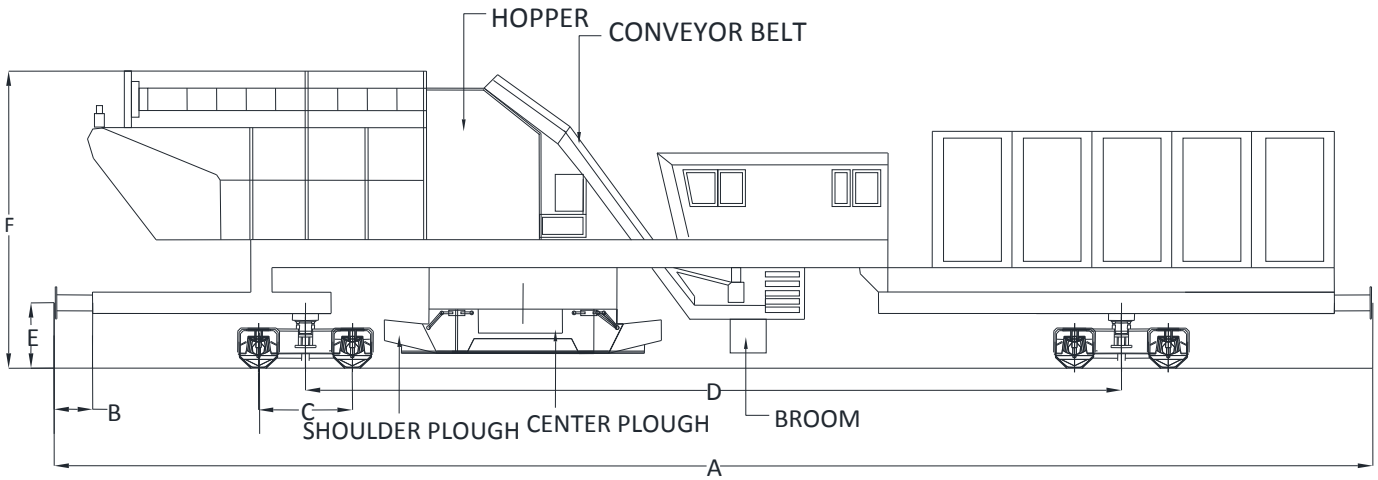

MODEL	A	B	C	D	E	F	WHEEL DIA	AXLE LOAD	WIDTH
BRM METEX RPB-01	22300	650	2000	13800	1105	4070	957	20.32t	3090

ALL DIMENSIONS ARE IN mm.

CHAPTER 4

TRACK RELAYING MACHINES

401. Track Relaying Machines - Following systems of mechanized track relaying are available on Indian Railways:

(1) Plain Track Laying Machines

(a) Track Laying Equipment (TLE).

(b) Track Relaying Train (TRT).

(2) Points and Crossing Laying/Changing Machine (PCCM)

402. Planning for working of Track Relaying Machines

(1) A proper organization should be set-up first for smooth operation/execution of track relaying work. Agencies for carrying out various works shall be finalized.

(2) The requisite survey shall be carried out and the longitudinal profile and alignment shall be finalized as per relevant provisions of the **Indian Railways Permanent Way Manual** and **Schedule of Dimensions.**

(3) Proposed longitudinal profile and alignment shall be indicated at suitable interval along the track by installing permanent reference points.

(4) Tamping machine may be deployed behind the track renewal work for achieving the desired track geometry.

(5) LWR/CWR plans may be got prepared and approved in advance.

(6) Adequate spares for working of all the machines (TRT/Portal Cranes and Tampers etc.) should be arranged in advance and regular supply ensured.

403. Track Laying Equipment (TLE) - It is a semi mechanized system of track renewal consisting of self-propelled portal cranes capable of moving on a auxiliary track of 3400 mm gauge. These portal cranes are moved to the work site on flat wagon by suitably modifying nominated flat wagon to have flat support arrangement for stabling and supporting the portals. These portal cranes are capable of self-loading and unloading from flat railway wagon. Once they reach site, these portals are unloaded at site and made ready for moving on auxiliary track. Normally two portal cranes work together at site. A schematic diagram of TLE is shown in Figure 4.1

404. Important assemblies of Track Laying Equipment (TLE)

(1) Side frames - The TLE contains two vertical side frames that house two vertical sliding frames.

(2) Bridge - Sliding frames are joined together with horizontal cross frame known as bridge. The motive power, hydraulic and electrical assemblies are installed over the bridge. The bridge can be raised/ lowered to facilitate lifting/lowering of panels.

(3) **Sleeper gripper -** On the underside of the bridge, grippers to pick up sleepers are provided. Gripping of sleepers by its end is done by two angles welded to the grippers.

(4) **Rail clamps -** Scissors type clamps are provided on both side of the bridge to hold the rails/panels (upto 13 m length generally) at four locations, two for each rail.

(5) **Turn table -** To facilitate turning of portal crane for placing it on the flat railway wagon and off tracking in mid section, a turn table is provided on the wagon. This turn table is supported on the wagon over wooden platform.

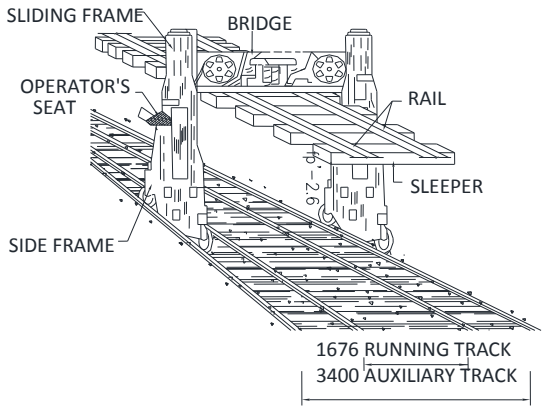

Fig. 4.1

405. Types of Track Laying Equipment - TLEs with lifting capacity of 9 t and 12 t are in use on Indian Railways.

Table 4.1	
Lifting capacity	**Manufacturers**
9 tonnes	• Plasser India (PQRS), • BEML • Simplex
12 tonnes	• Simplex

(1) The working mechanism of all the above models is similar.

(2) The dimensional detail of 12 t machine supplied by M/s simplex and 9 t portal supplied by Plasser India is given in **Annexure 4.1.**

406. Working mechanism and capability of Track Laying Equipment - The sequence of operation for relaying (CTR) with TLE is briefly described as under:

(1) Track Panels are fabricated with PSC sleepers and 12.6 m long service rails at a base depot. These panels are loaded on flat wagons in 2 to 3 layers by using portal cranes.

(2) The existing rails in track are cut in lengths of 12.60 m. Speed restriction of 30 kmph is imposed prior to cutting of rails.

(3) 10 rail/20 rail panels are unloaded alongside the track. Using the released CST-9 pots or wooden blocks or similar supports, these 10/20 rail panels are used to form the auxiliary track with 3400 mm gauge. The auxiliary track (AT) is laid to proper line and level using new rail panels, if rail renewal is also to be carried out as part of track renewal. Otherwise, released rails are used for making Auxiliary track.

(4) The rake formation containing TLE and panels loaded on flat railway wagon is brought to site of relaying by diesel locomotive after getting proper traffic and OHE block (for electrified sections). A typical composition of the rake formation is shown in Fig 4.2. Two to three BFRs are kept empty to load the released panels.

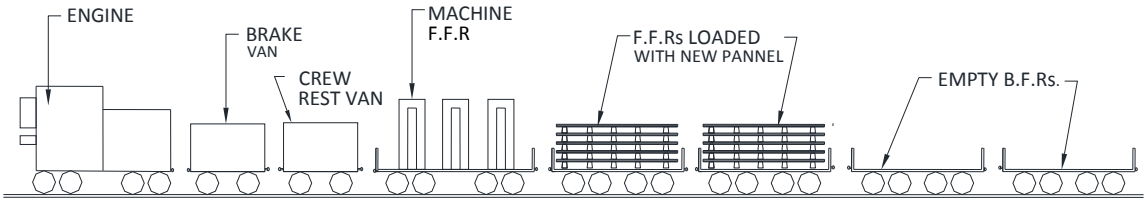

Fig. 4.2

(5) Following three methods of laying of new panels are used depending upon site conditions: -

(a) Pulling the rake formation.

(b) Pushing the rake formation.

(c) Parting the rake formation.

In the pulling mode, the rake is standing on the existing track and is pulled away from the work site. This has an advantage that newly laid track is available for post laying work. This is the most commonly used method for renewal by TLE, In the pushing mode, the rake is pushed towards the work site and moves on the newly laid track. While approaching a bridge or yard, where auxiliary track cannot be continued, this method of laying is used.

In parting mode, the rake is divided into two parts and work is performed in between. In jumbo traffic blocks, by dividing the rake into two parts, of new panel wagons and empty wagons, and using the portals, one for removing old panels and other for laying new panels, travelling time of portals can be reduced.

(6) Portal cranes (TLE) are unloaded from flat railway wagons on to the auxiliary track.

(7) Old track panels are removed and loaded on TLE rake, ballast bed is scarified manually and new panels are laid at site by portal cranes at correct alignment using distance gauge w.r.t. auxiliary track.

(8) Proper ramp is provided at the beginning and at the end of the work before permitting train operation.

(9) 10 /20 rail panels of auxiliary track are used for rail renewal after completion of work by TLE, releasing the service rails. Welding of the panel is then done. This cycle continues for the remaining work.

(10) Pushing method is used whenever yard or a bridge is reached.

(11) **Lifting Capacity –** One 12.60 m track panel of 60 Kg rail and PSC sleeper weighs about 7.5 t. Thus unlike 9 t portal, 12 t portal can carry two 12.60 m released service rails also with the released panels. This saves the effort to separately carry the released service rails from the work site to the depot.

(12) **Auxiliary Track –** The auxiliary track is laid with a gauge of 3400 mm and it should preferably be at the same level as main line track, but in no case be more than 50 mm higher than rail level as shown in Fig 4.3. Lower AT adversely affects the clearance available over the flat wagons and hence it is undesirable.

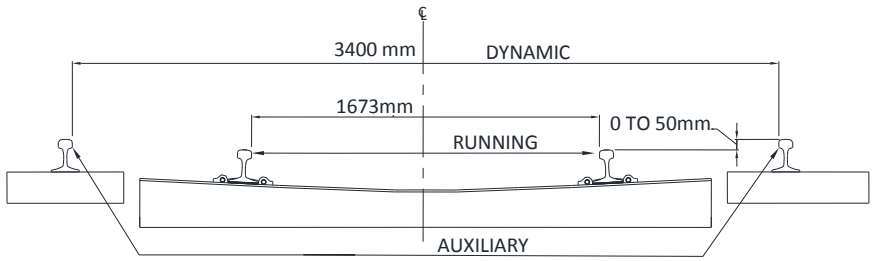

Fig. 4.3

407. Setting-up of TLE base depot

(1) A well organized and properly laid out base depot is the backbone of relaying by portal cranes. A typical layout of the base depot is shown in Fig 4.4, 4.5 and 4.6**.** Smooth functioning of base depot will ultimately reflect in efficiency and productivity of the relaying work. The base depot is required to cater to the following activities:

(a) Unloading of new PSC sleepers from the rake and stacking.

(b) Fabrication of new panels with greasing of ERC and insert.

(c) Unloading of released panels.

(d) Dismantling of released panels and adequate space for stacking released materials.

(e) Loading of pre-fabricated new panels.

(f) Formation of TLE rake.

(g) Maintenance of machines.

(h) Dispatch of released materials.

(i) Loading/unloading of ballast, if the base depot is also to be used as ballast depot.

One TLE portal is deployed in the yard for the yard activities. Alternatively, portal arranged by the agency can be provided for in the contract for the work.

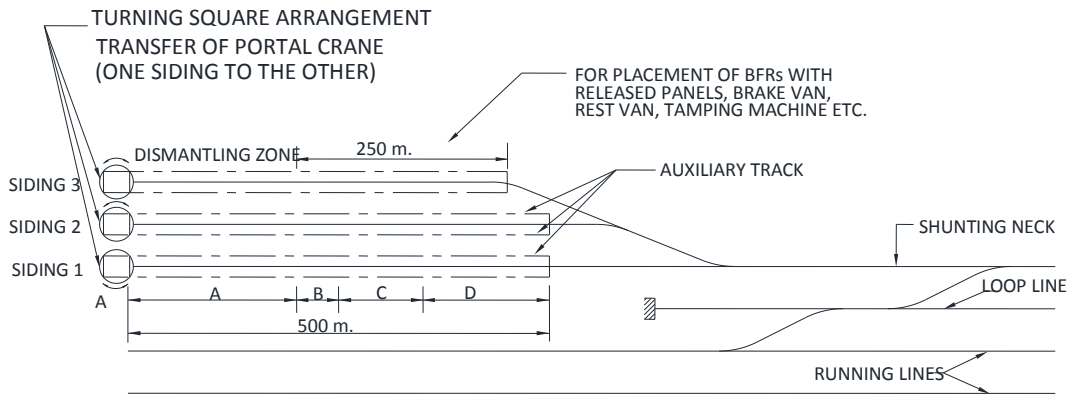

A = 200 m. FOR STACKING NEW SLEEPERS IN 10 TIERS
B = 50 m. BUFFER ZONE TO STACK NEW SLEEPERS/PRE. FAB PANELS (DEPENDING ON FLUCTUATIONS FROM TIME TO TIME
C = 100 m. FOR ASSEMBLING/STACKING NEW PANELS
D = 150m. FOR PLACEMENT OF BFRs FOR LOADING NEW PANELS

TYPICAL LAYOUT OF BASE DEPOT

Fig. 4.4

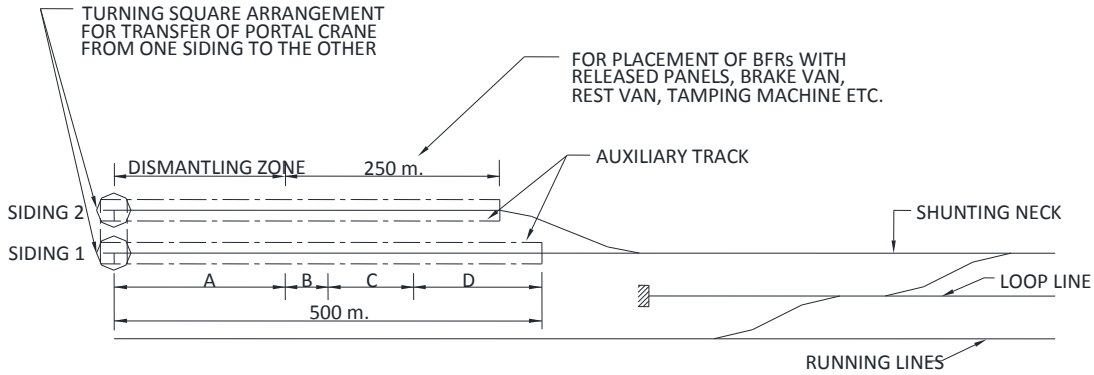

A = 200 m. FOR STACKING NEW SLEEPERS IN 10 TIERS
B= 50 m. BUFFER ZONE TO STACK NEW SLEEPERS/PRE. FAB PANELS (DEPENDING ON FLUCTUATIONS FROM TIME TO TIME)
C= 100 m. FOR ASSEMBLING/STACKING NEW PANELS
D= 150 m. FOR PLACEMENT OF BFRs FOR LOADING NEW PANELS

LAYOUT OF BASE DEPOT FOR LIMITED OUTPUT

Fig. 4.5

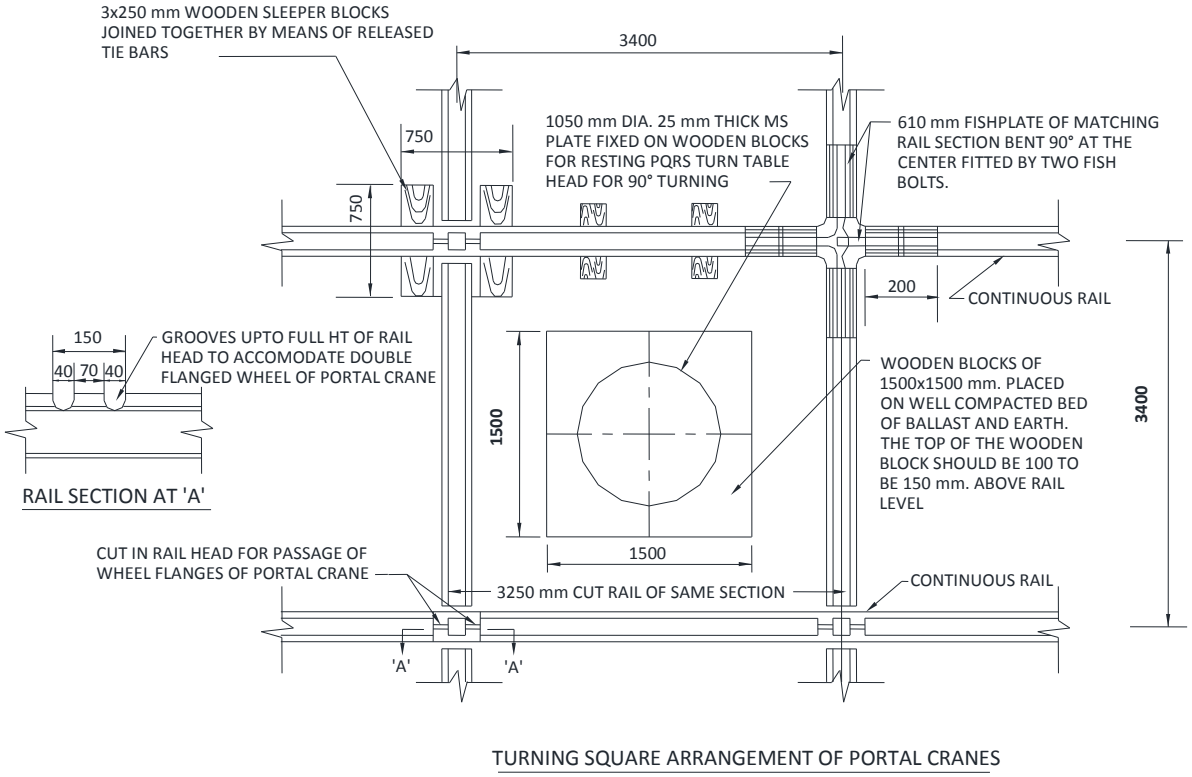

Fig. 4.6

(2) It is desirable to locate the base depot at a central place such that the distance of remotest work site on either side does not exceed 30 – 40 kms. The site selected should also be accessible by road and should have electric power supply and watering facilities. It is desirable that the base depot tracks should have facility of entry and exit on both sides from the running line.

(3) For smooth working, the base depot should have at least three lines of about 500 meters each connected to a shunting neck of minimum 350 m. Out of three lines, at least two lines should be provided with auxiliary track (AT) for movement of portal cranes.

(4) To strengthen depot working, it is desirable to install a motorized gantry crane moving on auxiliary tracks in addition to the third portal crane in the base depot for movement of sleepers/rails/panels. Gantry cranes can be of 6.5 m height from rail level to facilitate repair to portal cranes.

(5) It is desirable to illuminate the base depot so that the depot activities can be undertaken safely at night and to have enough plug points with 3 phase electric supply to facilitate welding/repairs required to the relaying equipment/machines.

(6) The base yard depot shall be well connected with Engg. control of division, ZMD control as well as HQ and also the site of work for communication.

(7) The base depot shall have adequate camping facilities for staff, storage space for new as well as released material.

(8) The track laying rake should have minimum 16 BFRs and desirably 20-22 BFRs.

408. Pre-relaying operations - Following operations should be under taken before and during actual relaying:

(1) At base depot

(a) Unloading of PSC sleepers from the rake and stacking in TLE depot,

(b) Fabrication of new panels with greasing of ERC and insert,

(c) Unloading of released track panels,

(d) Loading of pre-fabricated new track panels.

These activities are required to be continued uninterruptedly for smooth working and better output. Dismantling of released panels shall also be done simultaneously.

For fabrication of panel following care should be taken:

- Ensure adequate stock of service rails.
- Service rails shall be saw cut on both ends and holes shall be drilled with drilling machine duly chamfered. In no case gas cutter shall be used for cutting rails/making bolt holes.
- The spacing of sleepers shall be marked on full rail section (from head to foot), marking shall not be more than 1 mm thick, starting by half the spacing from rail end.
- The out of squareness of the sleepers shall not be more than +/- 10 mm, and tolerance for spacing shall not be more than +/- 20 mm.
- Correctly driven greased ERCs, proper placing of GRPs and proper setting of correct liners shall be ensured.

(2) At work-Site

(a) Track may be deep screened in advance of relaying, if planned. The remaining quantity of screened ballast should be trained out after relaying,

(b) Auxiliary track (AT) should be laid at 3400 mm gauge keeping the centre line same as that of main line track, as shown in fig 4.3. CST-9 plates or wooden blocks of size 560 × 250 × 125 mm should be used at 1.5 to 2.0 m distance for laying the auxiliary track. The supports should not be extended beyond 250 mm inside of the track as shown in fig 4.3. The length of auxiliary track should match with the daily progress of work.

(c) Special care shall be taken while preparing auxiliary track (AT) in curves such that any major alignment of curve & adjustment of SE can be avoided, especially in the summer months.

(d) The level of auxiliary track should be same as that of existing main line track and must have proper longitudinal and cross levels to avoid derailment of portal cranes. In no case, the auxiliary track should be

more than 50 mm higher than the existing track and in no case it should be lower than existing track.

(e) AT may be prepared by using service rails or new rails panels, if TRR is to be done after TLE work.

(f) Removal of ballast from the crib and shoulders up to the bottom level of the sleepers should be ensured.

(g) Full fittings of the old sleepers should be ensured to avoid its falling off while lifting released panels.

(h) Sleepers must be in single piece. All broken sleepers should be removed or replaced in advance with released good sleepers preferably.

(i) On girder bridges, the guardrails at the approaches on both ends should be removed temporarily.

(j) In case a level crossing is to be encountered, it should be opened in advance and renewed along with approach track.

(k) Proper planning and insertion of switch expansion joints at correct locations should be ensured.

(l) Cutting of LWR/SWR to single rails should be ensured for lifting released panels. Otherwise, replace the existing running rail (rail panels equal to days working to be cut) by service rails for the stretches, which are to be re-laid during the next day.

(m) Temporally disconnect or remove any other permanent obstructions such as cables, signalling rods, axle counters and any other installations like embedded rail pieces, tie bars, OHE connectors etc. to allow unhindered progress of work.

(n) Presence of S & T and OHE staff shall be ensured and jumpers should be provided where required.

(o) Availability of under noted equipment should be ensured at site:

(p) One set each of rail cutting and gas cutting equipment in good working condition.

(q) Two sets of rail closures of the each rail section being laid, in various sizes from 0.5m to 3m lengths,

(r) 4 sets of junction fishplates with bolts and clamps, in case existing rail section is different from the one being laid.

(s) Portable walkie-talkie sets should be provided at each relaying site for effective communication between the site of work and the adjoining stations.

(t) Extra number of track panels should be fabricated in the base depot to maintain a buffer stock for one or two working days of relaying work so that work at site does not suffer for want of depot working.

(u) Wherever AT cannot be provided (e.g. on girder bridge, near P & C, i.e. in station yards), working direction of TLE shall be planned well in advance.

(v) Fabrication of panels involving special sleepers like LC, bridge etc., shall be fabricated and loaded according to requirement.

(w) Power and crew arrangements should be done in advance.

(x) Sequence, arrangement of rake formation and position of machines shall be planned and conveyed to ASM on duty.

(y) Before entering into the block section it must be tested and ensured that emergency back-up system of machine equipment is in working order. The duplex and simplex chains should also be tested and made fit.

409. Operation during block

(1) Adequate traffic block along with power block should be arranged.

(2) Protection of track and safety of staff working in block should be ensured.

(3) After ensuring attachment of discharge rods (jumpers) and earthing of AT with running track on either side of the working place, portals should be unloaded.

(4) Firstly, required numbers of existing track panels shall be removed to create working space.

(5) Thereafter, sequence of portals shall be so arranged that maximum output can be achieved.

(6) Sufficient labour shall be kept for alignment and linking of track, filling of ballast and packing the sleepers for passing the trains safely after clearing the block. If, TRR is also planned, separate labour with supervisor shall be deputed.

(7) While laying of the fabricated panels, due care shall be taken to keep required gaps at joints, keeping in mind the rail temperature and working season, particularly in curved track. Squareness of joints & sleeper squaring should also be taken care of.

(8) At the end of the day's work, gap between the old track and new track shall be made up with the help of rail closure on both the rails, giving ramp not steeper than of 25 mm / rail length of 12.6 m. If there is level difference between new and old track, joints shall be fish plated and clamped/bolted tightly to pass the traffic.

(9) During block, continuous watch shall be kept on AT on which portals ply for its stability and continuity.

(10) The output shall be reviewed judiciously in the context of quality and quantity, both.

410. Post Relaying Operations - Following post relaying operations should be ensured:

(1) Clearance of track from any obstructions, infringement to SOD, for FOB/ROB/any other fixed structure/signal post etc. and implantation distance in case of electrified sections, before cancellation of the traffic block.

(2) Proper lifting and positioning of track, welding of joints, packing, ballast regulating and compaction/stabilization of track to raise the speed of the different stretches as per the table II of Para 308 of IRPWM.

(3) Training out of adequate quantity of ballast over the newly relayed track to full ballast section. Ballast recoupment activity should be properly synchronized with the relaying as to enable raising of speed to normal in three cycles of tamping by on-track tampers.

(4) Picking up of left-over released materials.

(5) Dismantling of auxiliary track and relaying the same in advance for the next day's work or use it for TRR as the case may be.

(6) Restoration of cables, OHE connectors, axle counters and other fixtures e.g. checkrails on level crossing, which were removed temporarily.

(7) BRM, Tamping machines and Dynamic Track Stabilizer should be deployed to enable raising of speed to normal.

(8) Provision of SEJ as per approved plan. In-situ welding of panels and de-stressing of LWR should be done after welding of panels.

411. Track Relaying Train (TRT) - Indian Railway is using TRT model no. P 811-S manufactured by M/s Harsco Track Technologies, USA.

(1) **Functions of TRT** – TRT is a system for complete mechanization of track renewal process. It does the following jobs

(a) Threads out existing rails from track.

(b) Removes old sleepers.

(c) Levels and compacts ballast bed.

(d) Places new sleepers.

(e) Threads in existing/new rails into track.

(2) **Works by TRT** – Following works can therefore be done by TRT:

(a) Complete track renewal (CTR).

(b) Thorough Replacement of sleepers (TSR).

(c) Thorough Replacement of rails (TRR).

(3) **Advantages of TRT –** Advantages of TRT vis-à-vis TLE are:

(a) There is no need to prefabricate panels and, therefore, base depot work is limited to loading and unloading of sleepers & fittings,

(b) No auxiliary track is to be laid at work site,

(c) Concrete sleepers loaded on modified Flat wagons are directly taken to work site and relayed one by one,

(d) New rails unloaded at work site on shoulders and duly paired and fish plated are exchanged with old rails simultaneously with sleeper renewals.

(4) **General layout –** General layout and important units of TRT model No. P 811-S are shown in Figure 4.7. Its dimensional detail of it is given in **Annexure 4.2**

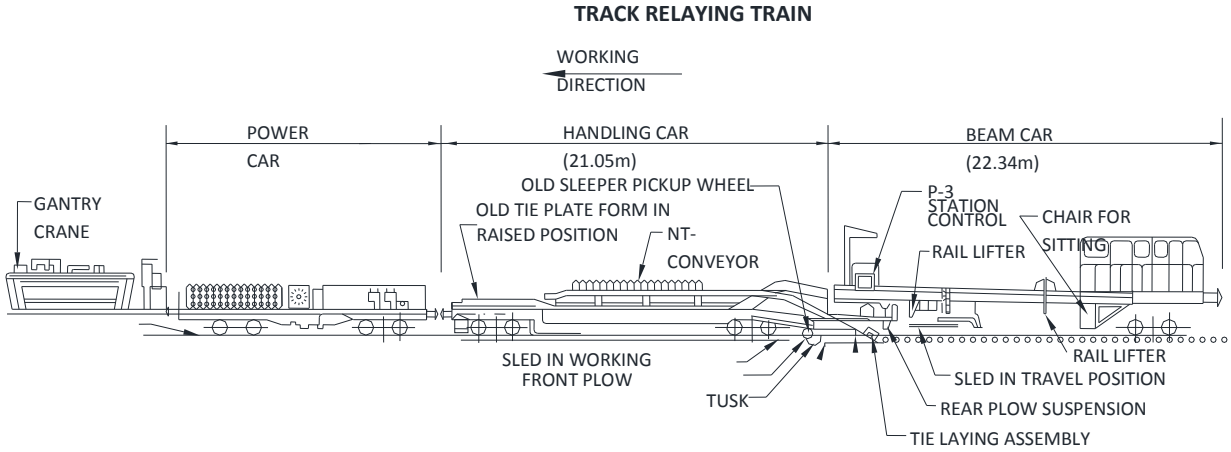

Fig. 4.7

412. Important Units of TRT- Model No P 811-S

(1) **Beam Car (22.34 m long) -** The beam car is hinged with handling car and has one common bogie and one independent bogie. Below this car, all the working units like old sleeper pickup, dynamic plough, sleeper flipper, indexing wheel (for sleeper spacing), self-guiding roller (for guiding in and guiding out rails), etc. are provided. If sleeper spacing is to be changed, this can be achieved by changing the indexing wheel. Sled is hung from this car when not in use.

(2) **Handling Car (21.05 m long) -** This car has one independent bogie and one common bogie with beam car. All the conveyors including new tie conveyor are provided on this car.

(3) **Power Car (14.81 m long) -** This is a four-axle vehicle. TRT power unit is provided on half the length of this car and remaining half is utilized for loading of sleepers.

413. Working Mechanism of TRT

Fittings of alternate sleepers are removed in advance. Rest of the fittings are removed after arrival of machine.

(1) Rail closer of about 7.0 m length (if TRR also planned) else one cut (if TSR is only planned) is introduced in existing track at the starting point.

(2) Crib and shoulder ballast in rail closer portion is taken out.

(3) TRT is taken to site of work hauled by a locomotive (DSL/Electric).

(4) The TRT is stopped at site of work in a position such that side plough is on first sleeper of cut rail.

(5) Lowering of shoulder / side plough.

(6) Removal of 7.0 meter long rails closures.

(7) Lowering sled (3.4 m) from beam car on to the rail seats of rail closures removed.

(8) Bringing idle bogie of handling car on to the sled and lock (by bringing back the machine).

(9) Slew out old rails and move TRT ahead so that sled clears rail closure portion.

(10) Remove the old sleepers manually from the closure area and level the ballast portion.

(11) Sleeper pick up wheel and dynamic plough are lowered in place cleared by removal of old sleepers.

(12) Rail ends of proceeding day's work shall be connected to the new rails laid on the sleeper shoulder.

(13) TRT moves forward and starts removing old sleepers by pick up wheel as shown in Fig 4.8

(14) Commence laying of new concrete sleepers by advancing the machine on Automatic mode.

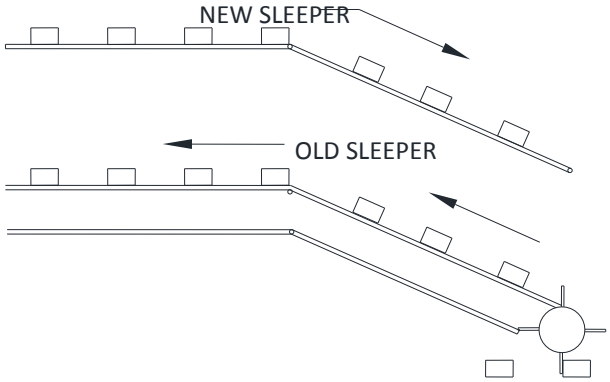

Fig. 4.8

(15) As TRT moves ahead old rails are threaded out and new rails are threaded in with the help of guiding rollers provided all along the length of TRT as shown below in Fig 4.9.

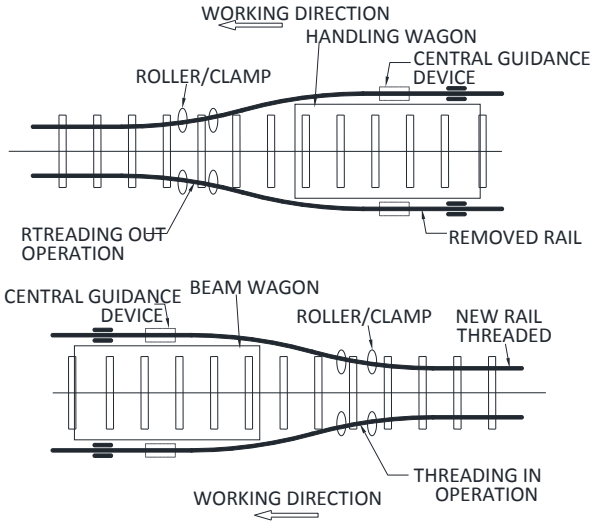

Fig. 4.9

(16) Fixing of fittings are done at rear.

414. Operations Prior to Deployment of TRT

(1) Base Depot

(a) Ensure proper selection of base depot site. The base depot for TRT should be centrally located (30-40 kms lead) in the area of working. It should have water, electricity and communication set up. Also, accommodation for machine and P. way staff should be available.

(b) Provide sufficient stock of new sleepers, elastic rail clips, liners and rail pads.

(c) Ensure proper line and level of auxiliary track for 3400/3700 mm gauge for portal working, if required for loading and unloading of sleepers.

(d) 30 nos. BFR's should be modified for one set of TRT 114 sleepers (approx.) are loaded in one BFR and about 1500-2000 or more sleepers should be loaded as required during block. While loading PSC sleepers on special BFRs, wooden battens of 75 mm × 75 mm or light rail section should be provided between different layers on the outer side of MCI inserts. This will enable gripper of gantry to function properly.

(e) Load rail fastening like elastic rail clips, liners and rail pads as required during block.

(2) At Work Site

(a) Condition of sleepers should be seen. All corroded and broken steel/CST-9 sleepers should be marked.

(b) Foot by foot survey should be carried out to identify the locations having lateral or longitudinal infringements. There should be no infringement

within one meter of sleeper ends. All obstructions like creep posts, alignment posts etc. within 1 meter of sleeper end should be removed.

(c) Adequate ballast should be available before relaying operations start so that tamping and raising of speed is not delayed.

(d) Deep screening should be carried out in advance wherever feasible. Excess ballast should be removed and shoulders should be brought down wherever feasible to sleeper level. It should be ensured that the ballast bed is fully consolidated.

(e) Check-rails of the level crossings falling in the range of work should be removed in advance.

(f) All longer fish bolts and joggled fish-plates should be removed from the range of work.

(g) New rails should be unloaded, paired, fish plated or welded in one piece (as required for a day's work) and set at about 1.5 m from track centre. Rails should be kept on foot with adequate support so that they do not get shifted during working of the TRT.

(h) All reverse jaw sleepers in case of CST-9 sleeper track should be removed. Alternatively, their lip may be cut by lip cutter so that rail removal is not obstructed.

(i) All longer wooden sleepers from joints be either removed or cut to size in advance of TRT working.

(j) Interlaced sleepers of height different from remaining sleepers should be removed.

(k) Ensure that the fittings in old track are not jammed and can be removed while working. Loosen them and refit in advance if any problem is anticipated.

(l) In case of CST-9 sleepers, gauging should be done in advance to avoid hitting of sleepers by sled assembly during lifting of CST-9 sleepers, Seven wooden sleepers/PSC sleepers should be laid in track at location 5 sleepers behind the rail cut and ballast around them removed for easy placement of plough.

(m) At location where relaying is to start, two rail pieces of 7.3 m length are cut and connected together using well-greased fish-bolts to enable quick opening during block.

(n) Plan the location of cut in the old track at the closing of work site so that it matches with the rail end of new rail panel. Some extra gap is preferable, as the new rail while threading in is likely to straighten and extend.

(o) Walkie-talkie sets for communication should be available with engine driver, Junior/Sr. Section Engineer (P. way), machine staff and adjoining stations.

(p) Ensure availability of S & T staff to connect- any wire/rodding disturbed during the block.

(q) Ensure removal of OHE bonds before the block. Temporary bonding of the OHE masts should be done by OHE staff while removing these bonds and providing these bonds after completion of work.

(r) Ensure earth bonding of new rail panels. There should be minimum 3 bonds in each panel length of 300 meters.

(s) Ensure removal of alternate keys in case of CST-9 sleepers and inside alternate keys in case of ST sleepers. The remaining keys should be checked for easy removal. Similarly, ERC should be checked for jamming and jammed ERC's should be removed and re-fixed before block.

(t) Existing PSC sleepers of about 2 rail lengths can be replaced with wooden sleepers to avoid loss of time while working.

(u) De-stressing, at high temperature, of the old tack should be carried out as provided in **Manual of Instructions on Long welded Rails.**

415. Operations During the Block of TRT

(1) Shield hydraulic pipes and other moving parts of the TRT so that in case of any mishap, these do not hit OHE mast.

(2) Always take OHE block, as staff may be required to climb on top of the machine for repairs etc. in case of any break down.

(3) Ensure proper track protection at the site of work, look-out men and hooter in good working order to give warning for train approaching on the other line.

(4) Utmost caution should be taken while lowering and raising clamp in order to avoid infringement to the adjacent line.

(5) Impose speed restriction on the adjacent line of not more than 50 kmph to ensure safety of men working at site.

416. Post Block Operations for TRT

(1) Ballasting of the track should be done immediately after track relaying operation.

(2) Ballast Regulator, Tamping machine and Dynamic Track Stabilizer should be deployed to enable raising of speed to normal in shortest possible time.

(3) In-situ welding of joints should be done before restoration of speed to normal.

(4) Switch Expansion Joints should be provided at locations as per approved LWR/CWR plans.

(5) Check rails should be provided at level crossing after final tamping of the track.

(6) De-stressing of LWR should be done immediately after welding the rail panels to form long welded rails.

417. Precautions during TRT working - The following precaution should be taken for TRT working:

(1) It should be ensured that the ballast bed of newly deep screened track is fully consolidated and there is no fear of settlement of ballast bed during TRT working.

(2) Do not unload excess ballast in advance as this causes excessive drag on the machine.

(3) Do not open out all keys in advance. This should be opened up only as the machine approaches the planned site of renewal.

(4) Do not stand close to the machine or modified BFRs and do not touch the gantry rails.

(5) Do not stand on the BFR while the gantry is moving over with new/old sleepers.

(6) Do not allow the gantry to stand with its wheels on different BFRs.

(7) Without work, do not sit on the rail seat meant for liner/rubber pad placement.

(8) Do not climb to the top of TRT without OHE block in electrified section.

418. Points and Crossing Laying/ Changing Machine (PCCM) - The machine (PCCM) available on IR is T-28, manufactured by M/s AMECA of Italy and is used for replacing and laying of complete assembly of turnout. Important units of AMECA T-28 are shown in Fig 4.10.

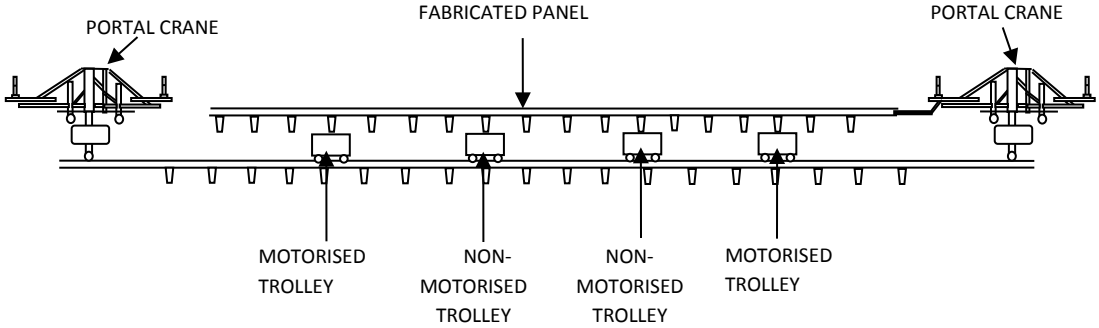

Fig. 4.10

419. Important Units of AMECA T-28

(1) **Portal Crane (2 Nos.) -** A set of two cranes (capacity 30 t each) can lift and handle a complete turnout (60 kg 1 in 12 weighing about 54 t). It can also be used to handle normal track. When working in pair, the connection between two portal cranes is provided by the turnout or track portion which is being handled.

The portal cranes are provided with rail wheels for movement on track and crawler for movement on firm ground.

The fabricated panel is lifted in between its side frames and can be carried forward on crawlers. The panel can also be laterally shifted by these portals.

Both portals are identical. One is used at crossing end, the other at switch end. Since crossing end is heavier, the portal position is so adjusted that load on crossing side portal does not exceed 30 t.

The position of gripping arrangement at portal ends can be adjusted. As both portals are identical these can be used, interchangeably, at either end by adjusting the gripping arrangement.

Additional hook arrangement is provided at centre of portal crane for additional support and to help in proper alignment of turn out assembly at the time of laying.

Important parameters of portal crane are given below:

Table 4.1

Parameter	Value
Load capacity (max.)	30 t
Speed with full load (max.)	0.8 kmph
Speed with no load	10 kmph
Max. lift with full load	2300 mm
Height in closed position	3065 mm
Height in lifted position	4744 mm
Crawler width	360 mm
Crawler lateral clearance	2066 mm (min.) 6116 mm (max.)
Moving width	3060 mm (min.) 7110 mm (max.)
Max. axle load	6.0 t
Total weight	24.0 t

The important dimensions of portal are given in **Annexure 4.3.** The crawler's lateral clearance and moving width are shown in Fig: 4.11

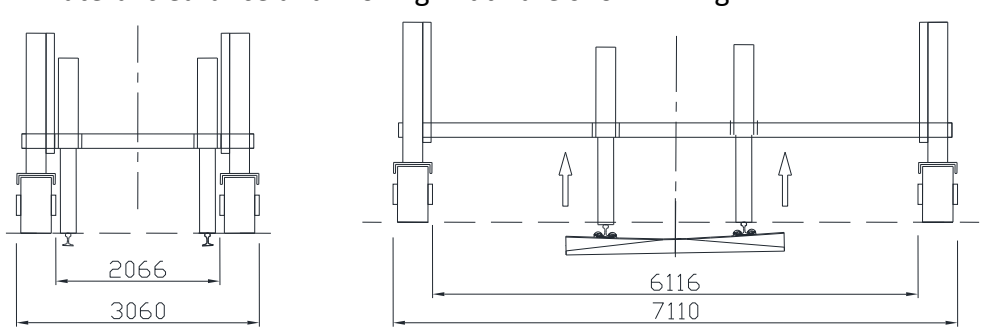

Fig. 4.11

(2) Trolleys (4 Nos.) - There are two motorized and two non motorized trolleys. These trolleys are used to transport the assembled turnout on track. The motorized trolleys (2 Nos.) have the facility to move laterally by 300 mm on either side or lift vertically by 300 mm. One such motorized trolley is placed each under the crossing portion and switch portion for shifting the turnout laterally or vertically for clearing any obstructions e.g. signal post, OHE mast, platform etc while transporting the assembled turnout.
Important parameters of Motorized trolley are given below:

Table 4.2	
Parameter	**Value**
Height	510 mm
Lateral Shift	+/- 300 mm
Upper table rotation	+ 10°
Vertical lift	+ 300 mm
Capacity	25 t

(3) Jib Crane - Pre-stressed concrete (PSC) sleepers for turnouts require careful handling to avoid damages during loading/unloading, assembling and laying. The sleepers transported on flat wagons are unloaded either at assembly depot or in yards near to the site of laying. Thereafter the PSC sleepers have to be spread at proper spacing for linking of turnout assembly. The jib crane is used for unloading and placement of these PSC sleepers.

420. Working Mechanism and Capability of AMECA T-28 - Portal cranes of T-28 are self loading/un-loading type and can load /off load itself from the road truck or railway wagon. This is required for long distance transportation from one yard to another.

The two portals brought by rail/road wagon off load itself from the wagon along with four trolleys. The trolleys are placed on track and the portal crane position itself over fabricated panel by moving on crawler as well as using its side shifting capability.

The points and crossing renewal can be done by longitudinal/forward launching and also by transverse/side launching or a combination of both depending on site condition.

(1) Longitudinal/Forward Launching

(a) The fabricated panel is lifted by the portal cranes and shifted laterally to place on four trolleys on adjacent Railway track. If the fabricated panel is assembled over track, the trolleys are pushed underneath after portal cranes lift the panel.

(b) The loaded panel is then towed by one of the portal crane moving on its rail wheel to the site of laying. The other portal crane follows as shown in Fig 4.10.

(c) Both the portal cranes are brought on crawlers by spreading their support legs and moved to the position over fabricated panel on trolleys to lift the panel and releasing trolleys. The trolleys are shifted by pushing them manually to siding.

(d) The fabricated panel is then longitudinally moved on crawler & placed on pre-prepared bed at correct position as shown in Fig 4.12.

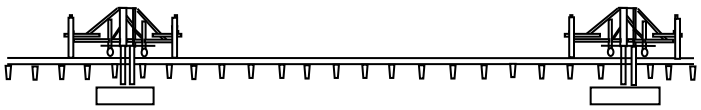

Fig.4.12

(e) The longitudinal and lateral shifting for proper joining with adjacent track and alignment of Panel is also carried out by the portal cranes.

(f) The portal cranes, after placement of turnout in position, load itself on the newly laid turnout supported on its own rail wheels and move to the siding line.

(g) The siding can also be cleared by portal cranes and trolleys, if required. For this, each portal can attach two trolleys with it and laterally shift to the ground or other line or even can self upload on Flat wagons or road vehicle as per requirement for clearing the siding.

(2) **Transverse/Side Launching -** When the fabricated panel is by the side of location where it is to be laid, the T-28 machine can lay the pre-fabricated panel without using the trolleys.

The fabricated panel can be lifted by using both portals and laterally shifted to position of laying using side shifting system of the machine as shown in Fig 4.13. The lifted panel can be longitudinally adjusted & positioned using crawler base.

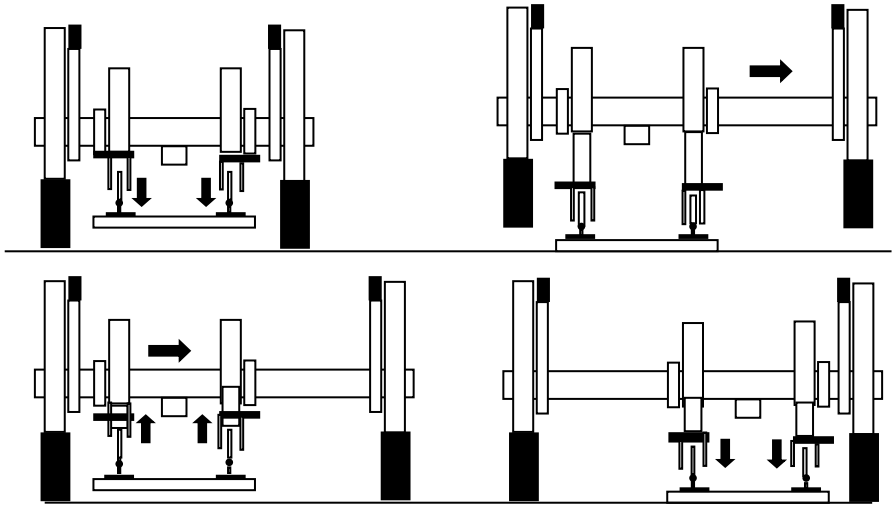

Fig.4.13

Working capability of AMECA T-28 are:

(a) **Lateral Shifting -** With 1 in 12 T/O, maximum lateral shifting of switch side of T/O assemblies is 1.5 m approximate and on crossing side is 0.75 m approximate in each shifting operation.

(b) The Portal crane can negotiate a level difference of 1679 mm while moving on the ground as shown in Fig 4.14.

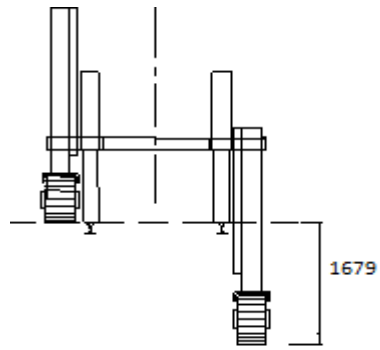

Fig. 4.14

(c) **Laying of Assembled Diamond Crossing on PRC -** The diamond assembly can also be laid by a set of AMECA T-28 portal with following modifications:

(i) The weight of double slip diamond crossing on PSC sleeper is 62 t (approx.). Therefore 5 sleepers (no 50 to 54) will have to be removed to keep the total weight as 54 t.

(ii) Since diamond crossing layout has crossing at both ends, the gripping location should be adjusted accordingly.

(iii) Position of portals should be adjusted so that both share almost equal load.

(d) **Laying Half Panel -** In case of breakdown of one portal during traffic block, the fabricated panel can be laid by cutting the panel into two pieces (each panel to weigh less than 30 t) and using one portal for laying each half, one by one. The gripping position however will have to be adjusted according to panel being handled.

421. Pre-Block Operations of T-28 M/c - Following preparations are to be made:

(1) New turnout should be assembled using Jib Crane near the site of turnout to be replaced. The fittings of assembled turnout should be complete and properly tightened and ERCs & inserts greased. If suitable location is not available nearby, assembly may be done away from site and then transportation can be done with the help of trolleys. Infringements on the way should be checked and movement with slewing accordingly may be planned.

(2) The assembled turnout should be loaded on trolleys for transportation where planned.

(3) Rails on either side of existing turnout should preferably be of the same section as that of new turnout. One rail length rail of same section on either side of new assembly should be kept in readiness or should be changed in advance.

(4) Deep screening of turnout portion should be done. Ensure required cushion and proper drainage. Rail levels should be taken for sufficient length on either side of turn out. Proposed rail profile should be plotted both for main line and loop line.

(5) Point machines should be disengaged and S & T gears of turnout should be disconnected before taking up its replacement.

(6) Ballast from crib and shoulder of sleepers should be removed up to sleeper bottom for full turnout length.

(7) 60 wooden blocks, each approximately 60 cm long, should be kept ready for facilitating passage of crawler on the obstacles.

(8) 4 nos. of rail pieces each 70 cm long should be kept ready for supporting the rail wheels of the crane during shifting.

(9) Jumpering of both ends of the turnout should be done by electrical staff before lifting and removing of existing turnout.

(10) Adequate arrangements should be made for protection of the line involved and adjacent lines, while the machine is working.

(11) Fish bolts should be lubricated and worked to facilitate easy removal during block.

(12) Location where clamp of each crane will hold the crossing and switch portions for lifting should be marked.

(13) Motorised trolleys shall be filled with petrol and their working efficiency shall be checked.

(14) Concrete breaker shall be available to break any obstructing concrete foundation(s).

422. Operations During Block of T-28 M/c

(1) Immediately after getting adequate traffic block, the fish bolts of existing turnouts should be opened. OHE connectors shall be disconnected.

(2) Both cranes should be traversed and brought in position for handling the existing turnout at the demarcated position.

(3) Old turnout should be lifted by cranes and traversed to suitable location for further dismantling after the block.

(4) The crane should be traversed to the pre-assembled concrete sleeper turnout and both the cranes should be taken to demarcated position on turnout.

(5) Simultaneously, the gangs should scarify the ballast from the location where the turnout has been removed. The ballast bed is lowered to accommodate extra height in case of concrete sleepers. If any hindrance is encountered, it shall be removed immediately to allow the turnout sleeper to rests at its place and level.

(6) The crawler side frame of the cranes should be spread suitably in stages to accommodate the length of the turnout sleepers on their demarcated locations for each crane.

(7) Pre-fabricated turnout should be held by the crane. The cranes with the turnout be traversed in stages and brought to the location of laying. The turnout is laid in position and fishplates are bolted to the existing track.

(8) One crane is traversed on the track and the second is utilized for final alignment of turnout. After placing the turnout, gangs should fill back the ballast manually.

423. Post Block Operations of T-28 M/c

(1) Ballast deficiency should be made good by putting additional ballast. Profiling and boxing of ballast should be done.

(2) The turnout should be tamped with the help of UNIMAT machine. Both alignment and levels should be corrected while tamping the turnout.

(3) The turnout may be interlocked and point machine engaged immediately after laying the turnout. OHE connectors shall be put into place.

(4) Damage to the cess during block operation should be made good.

(5) Provision of proper earthing points should be ensured by the Electrical staff.

424. Miscellaneous

(1) Because of small diameter of wheels (400 mm) of the machine, movement over fixed diamond crossing must be avoided in the section, where machine is required to run in service.

(2) The maximum permissible speed of crane is 10 kmph when it runs on its own power.

(3) Whenever travel is shorter (approximately 100 m) and no major obstacles exist, travelling on crawler is recommended. During traverse of crawlers with lifted turnout, cranes can turn around ±5 degrees.

(4) Motorized trolley is designed to perform 300 mm lateral shifting on both sides and this is to be used to correct the loading of crossing portion, which is wider. By lateral shifting of the trolley platform, obstacles on the way may be avoided.

Annexure 4.1

Important Features/Dimensions of Track Relaying Machine

TRACK RELAYING MACHINE

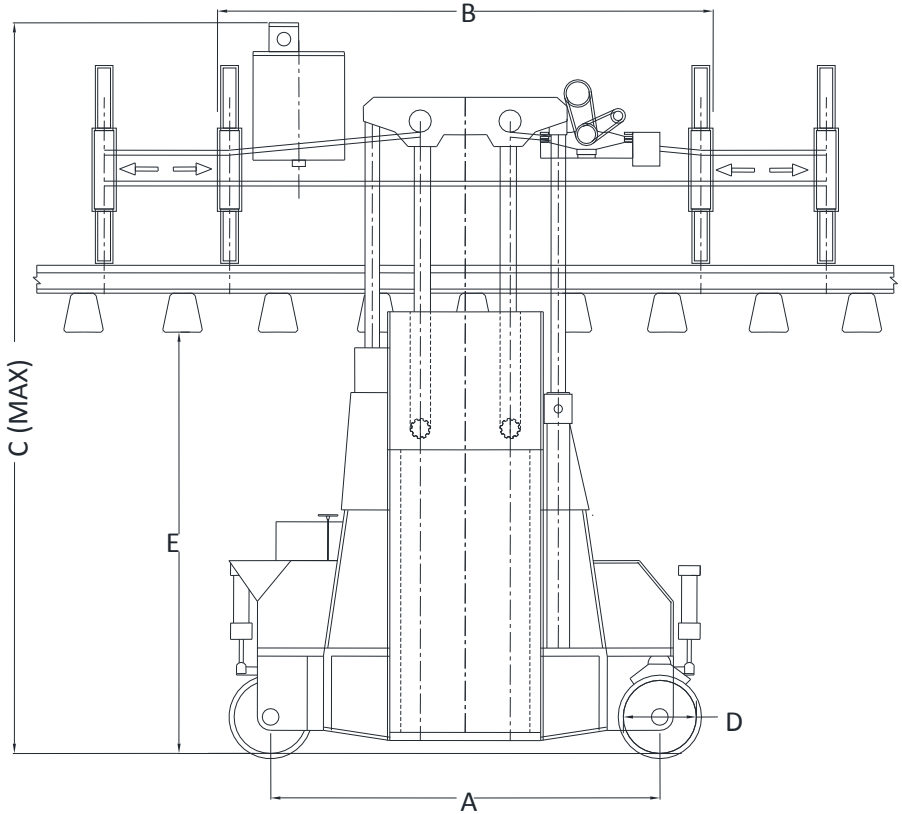

MACHINE MODEL	A	B	C	D	E	OVER ALL WIDTH	AUXILARY TRACK GAUGE	LIFTING CAPACITY
12T CAPACITY	2400	3150	4450	450	2725	3850	3400	12T
9T CAPACITY	2400	3050	4390	450	2665	3860	3400	9T

ALL DIMENSIONS ARE IN mm.

Annexure 4.2

Important Features/Dimensions of Track Relaying Train

TRACK RELAYING TRAIN

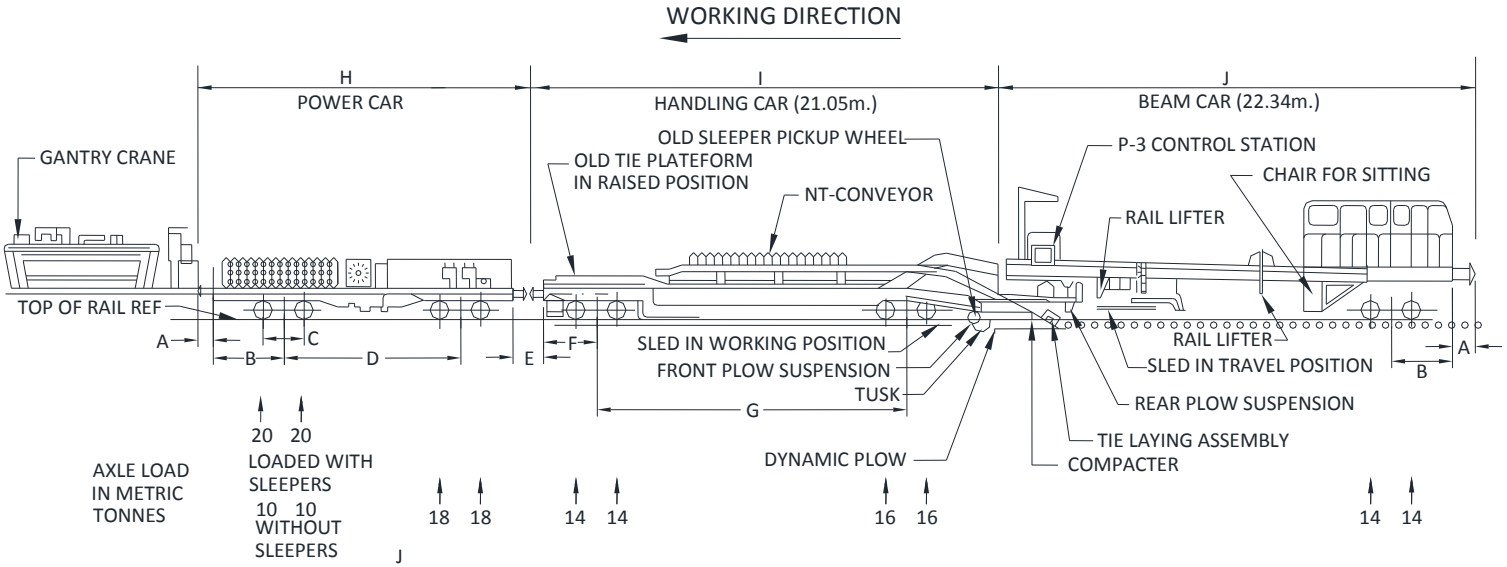

TRT	A	B	C	D	E	F	G	H	I	J
P811-S	641	2699	1727	8318	914	2699	13800	14814	21056	22339

NOTE-

1. TANK CAPACITY MAIN MACHINE HYDRAULIC OIL-470 GAL(US)
2. TANK CAPACITY MAIN MACHINE DIESEL FUEL -02 TANK @ 228 GAL(US)
3. TANK CAPACITY GANTRY HYDRAULIC OIL-123 GAL(US)
4. TANK CAPACITY GANTRY DIESEL FUEL -100 GAL(US))
5. GANTRY CRANES CAN BE PARKED ON THE SLEEPER WAGON OR ON THE MAIN MACHINE
6. INDIAN RAILWAY WAGON OMITTED FOR CLARITY.
7. ALL DIMENSIONS ARE IN mm.

Annexure 4.3

Important Features/Dimensions of Points & Crossing Changing Machine (AMECA T-28)

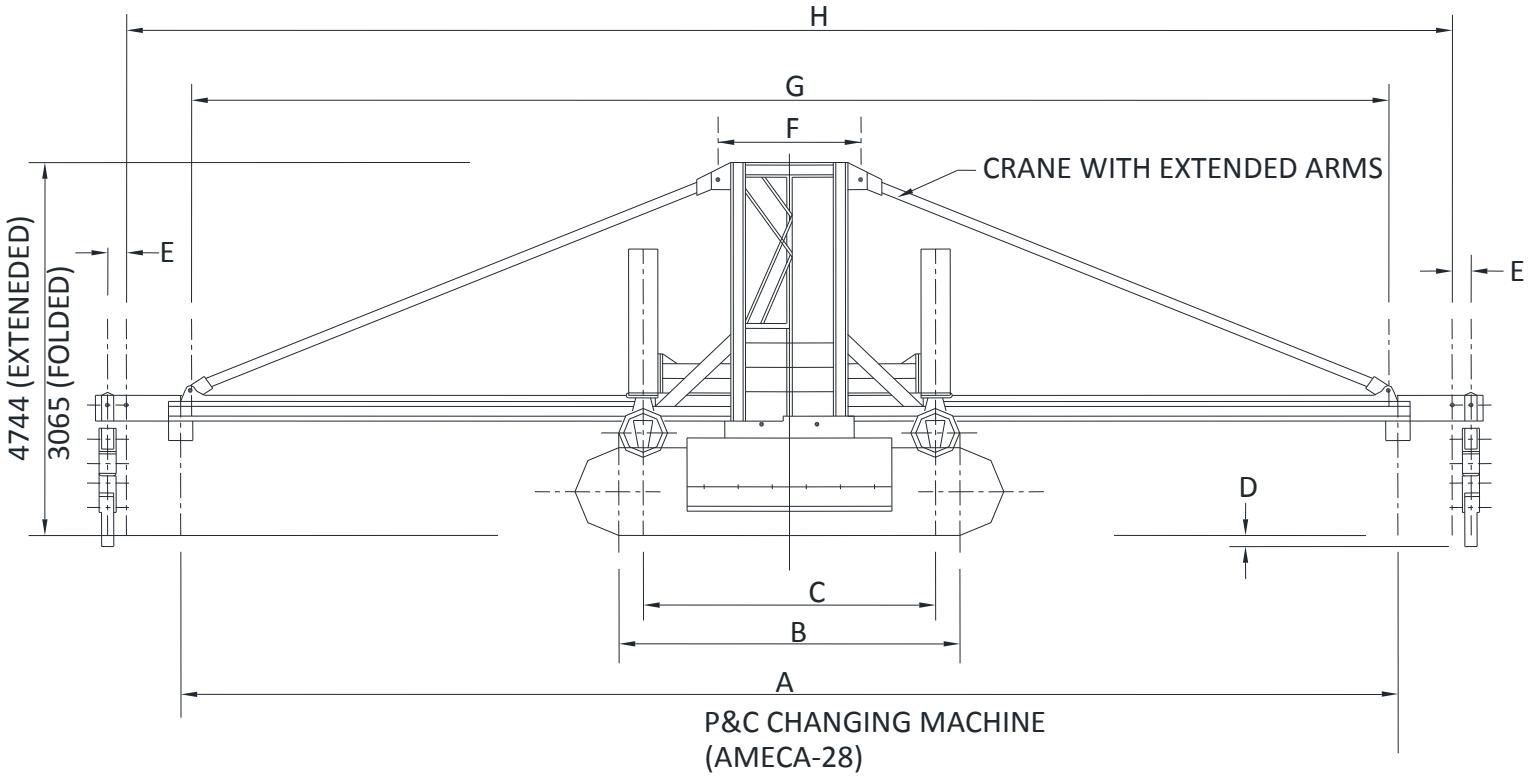

NAME OF M/C	A	B	C	D	E	F	G	H
AMECA-T28	10870	3100	2670	105	150	1310	10490	11820

ALL DIMENSIONS ARE IN mm.

CHAPTER 5

SPECIAL PURPOSE MACHINES

501 Rail Grinding Machine (RGM) - Rail Grinding is done to re-profile the railhead taking into consideration the profile of the wheel for optimisation of the rail wheel contact band and thereby making rail wheel interaction favourable. This is expected to increase the life of the rail and the wheel, apart from reducing the rate of generation of defects in the rails. Indian Railway is using 72 stone grinder of RGI Series of Loram, USA Make grinding machine.

(1) Purpose of Rail Grinding

(a) Rail grinding reduces the contact stresses and maintains favourable steering of the wheels. This will result in reduction in wear & tear and damage to the rail and wheel surfaces.

(b) Rail grinding shifts the contact of majority of the wheels from the area with surface defects on the rail, thus avoiding further growth of defects.

(c) Rail grinding avoids the contact of tread of wheel on misaligned welds, thus resulting in reduction in hunting on straight track and avoiding consequent damage.

(d) Rail grinding helps to control the damage due to rolling contact fatigue and removes the cracks in the initial stages of their development, thus avoiding their further growth deeper in the rail; thereby reducing rail/weld failures. The cracks will not be allowed to reach the stage of high growth and will be ground in initial stages when their growth is slow.

(e) Rail grinding removes the corrugations and other irregularities from the rail top resulting in better riding quality.

(f) Wheel radius is flatter than the rail radius of new rails. With the passage of traffic, the rail radius tends target flattened increasing the width of the contact band, which is not desirable. This causes hunting and damage to the rail surface. Rail grinding will restore the rail crown radius, thus reducing this damage.

(g) Rail grinding removes the white martensitic layer on rail top, which is the cause for development of cracks due to its brittle nature.

(h) Due to difference in hardness of rail and heat affected zone (HAZ) near welds, dip formation starts in the vicinity of the weld due to differential wear. This weld dip also promotes rolling contact fatigue (RCF) in various forms and also causes squat formation. This dip formation will be avoided by regular rail grinding.

(i) Rail grinding helps in reduction of wear due to reduced contact stresses by adoption of engineered rail profiles.

(j) Where other surface defects such as wheel burns, scabs, low or high welds etc. exist on rail, rail grinding helps to taper down the defects after each grinding pass so as to reduce the damage due to these defects.

(2) **Advantages of Rail Grinding -** The advantages that will accrue by rail grinding can be summarized as given below:

(a) Increased life of rail and wheel: There is appreciable increase in life of the rails after rail grinding. The life of the wheels is also reported to increase by grinding of rails.

(b) Improved reliability of assets: The defect generation rate of rails is reported to reduce to one-fourth on some of the railway systems. Reduction in failures will lead to increased safety and reliability of train operations.

(c) Less tractive resistance due to lesser impact & therefore be saving in fuel consumption.

(d) Improved reliability of USFD testing: Due to smooth and cleaner rail surface, the reliability of USFD testing will improve.

(e) Reduced track geometry deterioration: The track geometry will retain for longer period and the requirement of tamping of the track should come down.

(f) Reduced degradation of ballast: Due to lesser impact, the degradation rate of ballast will come down. This should result in reduction in the frequency of deep screening of track.

(g) Less noise: The noise level goes down after rail grinding.

(h) Reduced derailment proneness: The overall improvement in rail wheel interaction will result in better safety performance.

502 Important Assemblies of RGM

(1) **Components of RGM –** RGM consists of a formation of 6 vehicles, which moves as a train composition and is shown in Fig 5.1. The major components of RGM are explained below:

(a) Front Control car (FCC)-1 No.

(b) Grind cars-3 Nos.

(c) Water wagon-1 No.

(d) Camp coach cum Rear control car (RCC)–1No.

Fig. 5.1

(a) **Front Control Car (FCC)** – This is air-conditioned cab provided for both driving and grinding operations. For all grinding operations, the machine is

having 2 touch screen consoles known as HMI (Human Machine Interface) consoles. These consoles are used for various settings, selection of patterns, viewing machine working etc. Hydraulic and pneumatic system diagnostic mode is also available. There are two CCD cameras with one monitoring FCC showing the view of the track in front as well as the in rear of RGM formation. All driving and braking levers, gauges and switches are available on the front desk. Important dimensions of FCC are given in Annexure 5.1. The components of Front Control Car Fig 5.2 below:

FRONT CONTROL CAR

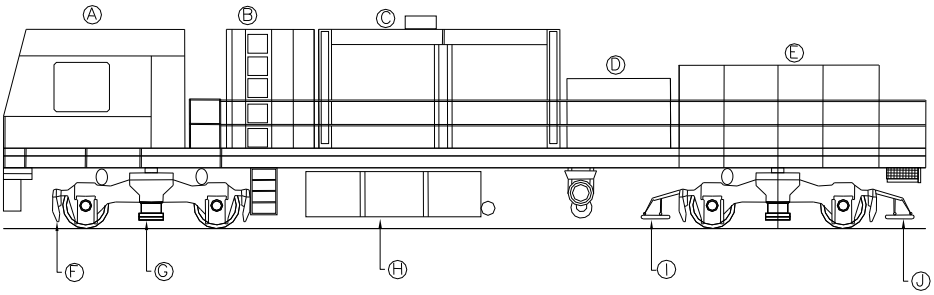

A – CAB
B – AIR COMPRESSOR
C – ELECTRIC LOCKER
D – WATER TANK
E – FREQUENCY CONVERTER
F – OBSTACLE DETECTION
G – DRIVE TRUCK (POWER BOGIE)
H – BELLY TANK (10000 L WATER TANK)
I – RAIL CORRUGATION ANALYSER
J – LASER BASED RAIL PROFILE MESUREMENT SYSTEMS

Fig. 5.2

(b) **Grind Car** – The components of grind car are given in Fig 5.4 below:

The dimensions of grind car are given in **Annexure 5.1**

(i) There are three grind cars and each grinding car consists of two grind carriages and each carriage is having 12 grinding motors – six on each side.

(ii) The grind carriages known as buggies are provided with separate wheels and the buggies are kept in raised and locked position during idle running of the machine.

(iii) The grinding motors can be positioned in up or down condition when the buggies are down and running on the track.

(iv) During the working mode, the grinding motors are raised only in case of obstruction while the buggies keep running on track.

GRIND CAR

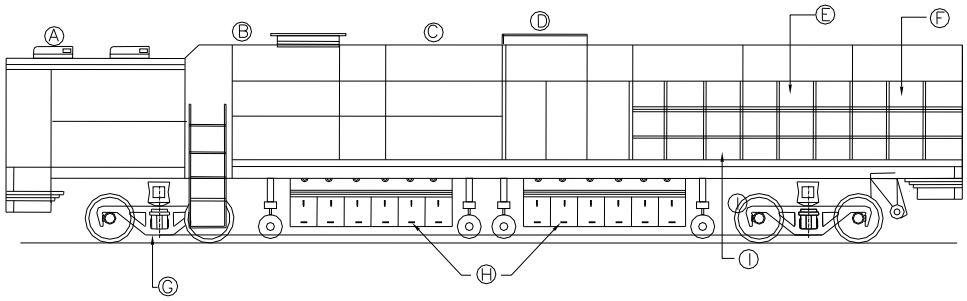

A – CAB
B – HYDRAULIC POWER
C – GENERATOR
D – ENGINE
E – DUST COLLECTOR
F – AIR COMPRESSOR
G – POWER BOGIE
H – CARRIAGE
I – FUEL TANK

Fig. 5.3

(c) Water Tank Wagon

(i) Water tank wagon is attached to Rail Grinding Machine to ensure sufficient availability of water to take care of fire hazards. Wooden sleepers in track, dry grasses in track/on cess are susceptible to catch fire due to heavy sparks generated during grinding operation. Water is sprinkled through 'Tie (sleeper area) Sprays' and 'Ditch (cess area) Sprays' provided on both front and rear of extreme grinding cars. Water sprinkling is done using the spray in advance of the grinding operation to wet the sleepers and cess to prevent fire.

(ii) The machine is equipped with 30 HP pump, water cannons, fire hoses, fire extinguishers and fire detection system to take care of fire hazards. Total water storage available on the machine is 75,000 litres (FCC – 20,000 litres + Water wagon – 55,000 litres).

(d) Camp coach cum rear control car (RCC) – The camp coach is having driving controls and is also known as Rear Control Car or RCC. Cameras are mounted on RCC overlooking the track in the rear and this image is also displayed on a monitor in FCC. This helps in sequencing the motors up and down as well as looking for any obstructions on the rear side of the train while carrying out grinding in reverse direction.

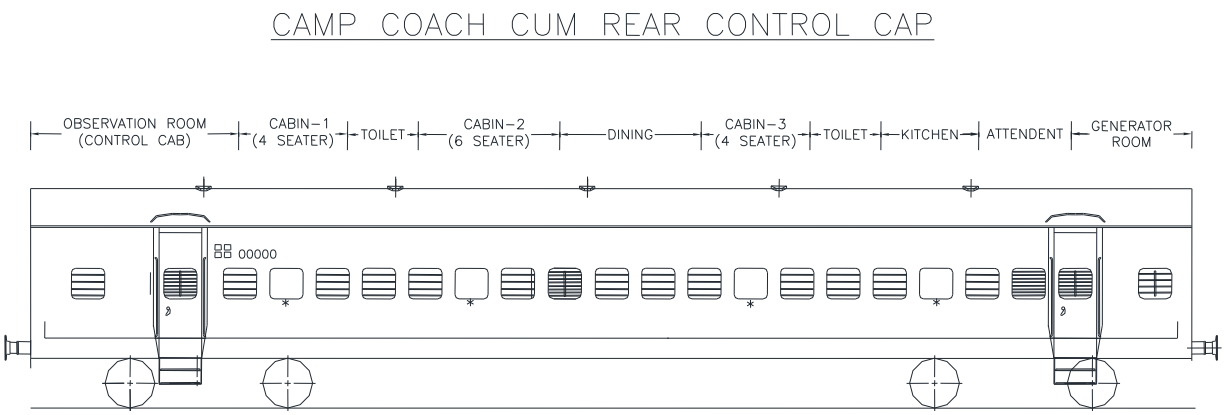

Fig. 5.4

(2) **Rail Corrugation Analyzer (RCA)** – It is mounted on front axle of rear bogie of FCC. This measures the rail corrugation during running of the machine and gives an idea of the level of corrugations present in the track to facilitate the decision of depth of cut.

(3) **Obstacle Detection System** – It gives a warning to the SSE/JE/TM in case of any obstruction found in the track. The SSE/JE/TM can take appropriate action on getting a signal.

(4) **Rail Profile Measurement System (Optical)** – The machine is having two laser based rail profile measurement systems to measure the railhead profile before and after the grinding. These measuring systems are mounted at appropriate locations in FCC and water wagon.

(5) **Dust Collection System** – It is provided in the machine to suck the iron particles generated during grinding and to store them in a chamber so that the iron filings are not scattered along the track and also do not foul the environment. Iron filings are harmful for human beings and are also likely to cause damage to eyes. The dust collection chambers can be emptied as per convenience after the grinding run.

(6) **Brake System -** Following brake systems are provided on RGM Machines:

(a) **Indirect Brake –** This brake is applied on machine with coupled camping coach/wagon automatically when air pressure of BP line releases through valve A9 or drops.

(b) **Direct Brake –** This brake is directly applied on all rolling stock attached with this machine. It is used for low speed braking.

(c) **Emergency/DumpBrake –** This is applied directly on the each rolling stock of the machine in the case of emergency for immediate stopping.

(d) **Parking Brake –** Hand operated brake systems are provided on each of the grinding cars for stabling.

503 Grinding Strategy

(1) **Strategy –** The metal removal during the process of grinding and the frequency of grinding is decided with a purpose to control Rolling Contact Fatigue.

(2) **Corrective Grinding –** Grinding done for complete removal of corrugations and surface defects in one cycle (with required number of passes in same or continuous blocks) to achieve the engineered rail profile is called corrective grinding.

(3) **Preventive Grinding –** Grinding done in the initial stages of defect generation is called preventive grinding. In preventive grinding, the grinding is done more frequently but the amount of metal removed during each cycle is much less as compared to corrective grinding. Preventive grinding is considered to be a better approach since the grinding can be done in a single pass at higher speed and the head hardened layer on the rail top is not removed.

(4) **Preventive-Gradual Grinding –** On Indian railway the surface defects, in the sections identified for rail grinding have passed the stage of preventive grinding. Corrective grinding on IR is not desirable on account of issue of blocks and likelihood ofremoval of head hardened layer. Thus, the strategy of Preventive-gradual grinding has been adopted wherein metal removal to be done is more than that required in case of preventive grinding but less than that required for corrective grinding. The stage of preventive grindingis expected to be achieved on IR, after 3 to 4 cycles of grinding.

(5) **Target Rail Profiles –** Target rail profiles are the rail profiles to be achieved after rail grinding and are designed to produce minimum contact stresses during rail wheel interaction. Nature of Rail Wheel interaction is different on straight track as compared to curved track. It is different on mild curves and on sharp curves, for high rail and for low rail of a curve. The target rail profiles to be achieved by grinding are therefore different for each of these locations and are designed to produce least stresses during rail wheel interaction.

(6) **Patterns –** Grinding stones are positioned across the railhead to achieve a particular pattern for removal of metal. The position of a stone is characterized by the angle of the rotation axisof the stone from the vertical. Thus, depending upon the angle, the location of the grindingby each of the stone on the railhead will vary. Power of grinding motor can also be controlled. A pattern will be defined by angle and power of each of the motors working on the railhead. For grinding at different locations, it is required to selectone of the designed grinding patterns to achieve the target rail profile in one or more passes. Different patterns may be used for left and right rail of the same track. Metal removal from the railhead will depend upon the following factors:

(a) The number of grinding stones working on a rail.

(b) The power of the motors.

(c) Speed of grinding.

(d) Number of passes.

(e) Hardness of the rail.

(f) Characteristics of grinding stones (depending on specifications of the manufacturer).

(g) Position of the grinding stones (angle of axis of rotation of the stone).

(7) **Grind Data Management System (GDMS) –** The Grind Data Management System is an integrated automatic data acquisition, data management, quality control, reporting, and planning tool for Rail Grinding. GDMS is software-based system, which is fed with track data, different pre-decided patterns and proposed target profiles for different track geometry and structure. It uses these details to suggest patterns to be followed for grinding at different locations. It uses laser based rail profile management system available in the front as well as on the rear of the grinding machine to record the pre and post grinding rail profile. By taking a measuring run in advance, GDMS is having the facility of recommending one of the pre-fed patterns to get target rail profile from the existing rail profile. After measuring the existing rail profile and choosingthe target rail profile, GDMS recommends patterns and speed to get the most efficient results.

(8) **Grind Quality Index (GQI) –** The postgrinding profile achieved is compared with the target rail profile by GDMS and an index known as GQI (Grind Quality Index) is displayed during the run. GQI gives an idea about variation from the target rail profile. GQI value of 100 means that we have achieved the target profile within the specified tolerances. A lower value indicates the deviation. GQI value of 80 or above can be considered acceptable.

504 Capability of RGM

(1) RGI series is high productivity grinding machine consisting of 72 stones, i.e. 36 stones each for the left rail as well as right rail.

(2) Rotation of each is done by an independent electric motor of 30 HP. The speed of rotation is 3600 RPM. Each motor can be independently tilted at a desired angle from +70° (towards gauge face side) to -30° (towards field side). This angle is measured from the vertical.

(3) The machine is capable of grinding of plain as well curved track, track in tunnels, track on bridges, glued joints and fish plated joints. Machine can work on curves up to 10° and for track with gradients up to 3%. Check rails provided on curves, if any, are required to be removed, prior to the grinding. There is no need to remove the bridge guard rails. Level crossings, points & crossings, SEJs and axle counters create obstructions and are to be skipped by raising the grinding stones, while these features are encountered. It has also been observed that joggled fish plates provided on outer rail of sharp curves also create an obstruction and should be removed before grinding, as far as possible, to avoid grinding of the fish plate and resultant excessive wear to the grinding stone.

(4) The machine works in traffic block. However, no power block is required. Grinding can be done in either direction without the need for reversing the machine.

(5) The machine is capable of running while grinding, at a speed ranging from 2.4 kmph to 24 kmph, depending upon the quantity of metal to be removed. Generally, the speed is kept between 8 and 20 kmph during grinding.

(6) The maximum cutting depth in each pass is around 0.15 mm at the working speed of 15 Kmph and around 0.22 mm at the working speed of 10 kmph.

505 Working Parameters of RGM

(1) **General –** Indian Railways is initially doing preventive gradual grinding on the basis of target profileto be achieved, grind patterns and grinding frequency suggested by Loram in consultation with National Research Council, Centre for Surface Transportation Technology, Canada (NRC). After gaining experience, Indian railway should decide to shift to preventive grinding and modify target profile, patterns and grinding frequency accordingly, as required.

(2) **Target Profile –** NRC has designed four target rail profiles for Indian Railways as shown in fig 5.5 below. These are namely:

(a) Contact Point Central (CPC).

(b) Contact Point Field (CPF).

(c) High Rail Sharp (HRS).

(d) High Rail Mild (HRM).

(3) **Rail Wheel Contact Points –** CPC and CPF are one-point contact and HRS and HRM are two-point contacts on railhead as shown in the figure below. In CPF profile, the contact of the wheel on the rail will shift towards the field side (cess side) while in CPC the wheel will make the contact with the rail in the centre.

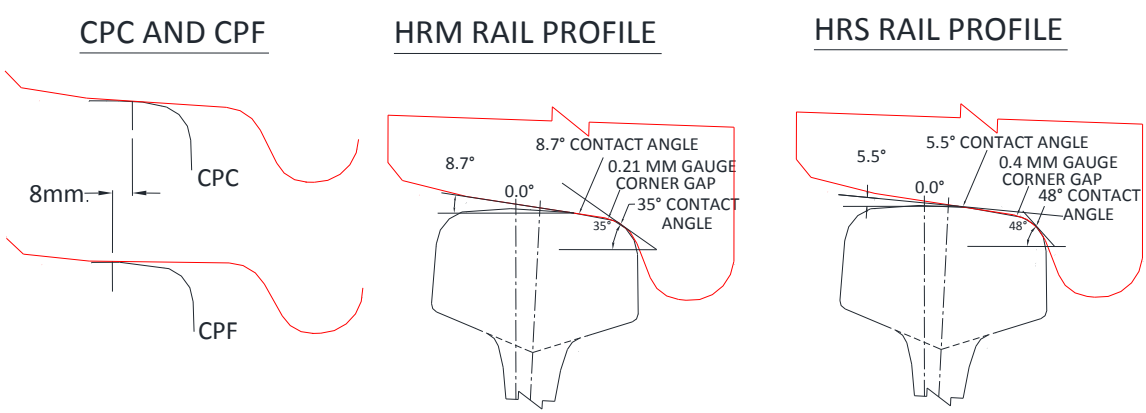

Fig. 5.5

(4) **Selection of Target Profile –** For selecting the target rail profile, a curve more than 1.25 degree is called a sharp curve. The suggested profile for different track locations are tabulated below:

Table 5.1(Target Rail Profile)

Location	Line/Curve	Rail Section	Grinding Template/Profiles
Tangent (straight track)	UP	60 Kg	CPF
Tangent (straight track)	DN	60 Kg	CPC
Tangent (with hunting)	UP/DN	60 Kg	CPF

Tangent (single line)	Single	60 Kg	CPF/CPC (alternate CPC and CPF)
High sharp	> 1.25°	60 Kg/52 Kg	HRS
High mild	≤ 1.25°	60 Kg/52 Kg	HRM
Low sharp	≤ 1.25°	60 Kg	CPF
Low mild	> 1.25°	60 Kg	CPC
Tangent	UP/DN	52 Kg	CPC
Low sharp and mild	UP/DN	52 Kg	CPC

For the straight track, 2 profiles have been designed. CPC would be used on 'Down' track and CPF will be used for 'UP' track. The idea is to have half of the straight track with CPC and the balance with CPF. In case of long stretches of single line track, half of it will be demarcated for CPC and the other half for CPF.

(5) Grind Patterns – Loram in consultation with NRC Canada has designed 49 patterns for Indian Railways for grinding. Since the target rail profile changes from straight to a curved track and will also be different for the high rail and the low rail of curved track, the pattern to be selected will also be different for all such situations. The patterns are shown in **Annexure 5.2.**

Only one pass is generally done for straight track and 3 passes are done for curved track. 3 passes on curved track are done in the same block by stopping the machine after first pass, doing second pass by running the machine in reverse direction, again stopping the machine after second pass on curve followed by third pass in normal direction. For the first pass on curves, pattern suggested by Loramis used. The pattern for second and third grinding passes on curves is suggested by GDMS from the list of patterns on the basis of profile achieved after first grinding pass and known target profile. Target profile is known to machine on the basis of track data with detail of tangent, curve, starting and end of curve etc. fed in GDMS in advance. The patterns suggested in Annexure 5.2 are only for first cycle of grinding on the section. For subsequent cycles of grinding, the patterns are required to be revised.

(6) Grind Cycle – The grind cycle suggested by M/s Loram for preventive-gradual grinding is as below

Table 5.2

Cumulative GMT in the section from start of grinding	**Cycle #**	**Track Classification**			
		Tangent (Straight) Track	**Mild Curves**	**Sharp Curves**	**Test Sites**
0	Grind 1	Single Pass at 15 kmph	3 passes at 18 kmph	3 passes at 18 kmph	Monitor Profile
25 (Approx)	Grind 2	Single Pass at 15 kmph	3 passes at 18 kmph	3 passes at 18 kmph	Monitor Profile and RCF

75 (Approx)	Grind 3	Single Pass at 15 kmph	3 passes at 18 kmph	3 passes at 18 kmph	Monitor Profile and RCF
125 & so on (Approx)	Grind 4 & so on	Single Pass at 15 kmph	3 passes at 18 kmph	3 passes at 18 kmph	Monitor Profile and RCF

The grind cycle may vary for some special sections like KK line, for which separate guidelines will be issued by RDSO.

Where more than one pass is required (generally on curves), speed and patterns for the second and the third pass will be as suggested by GDMS software.

506 Monitoring Equipment for Grind Quality

(1) **MINIPROF –** MINIPROF is an equipment to measure the profile of the railhead to the accuracy of 0.054 mm. This is contact type rail profile measuring system. The MINIPROF data is useful for knowing the wear of rail due to traffic and wear of the rail due to grinding. It is also used to compare the post grind profile to the target profile to assess the appropriateness of the grinding parameters.

(2) **Bar Gauge –** This is a hand held instrument used for measuring of profile of the railhead. Four templates are attached to this gauge for 4 target profiles, namely CPC, CPF, HRS and HRM. Deviation of existing profile from target profile is quickly known by putting one of the templates over the railhead and then using taper gauge to measure the gaps. The tolerances to the template are given in table 5.3.

Table 5.3				
Tolerances to Templates				
Template	Lower Gauge Corner (+60^0 to +16^0) in mm	Mid Gauge Corner (+60^0 to +6^0) in mm	Field (o^o) mm	Far Field >o^o Mm
HS	+0 to -0.6	+0 to -0.6	+0.3 to -0.3	+0.3 to -0.3
HM	+0 to -0.6	+0 to -0.6	+0.3 to -0.3	+0.3 to -0.3
LS-CPF	+0.3 to -0.3	+0.3 to -0.3	+0.3 to -0.3	+0.3 to -0.3
LM-CPC	+0.3 to -0.3	+0.3 to -0.3	+0.3 to -0.3	+0.3 to -0.3
T-CPC	+0.3 to -0.3	+0.3 to -0.3	+0.3 to -0.3	+0.3 to -0.3
T-CPF	+0.3 to -0.3	+0.3 to -0.3	+0.3 to -0.3	+0.3 to -0.3
	+0.3 to -0.3	+0.3 to -0.3	+0.3 to -0.3	+0.3 to -0.3

(3) **Star Gauge –** This gauge is in the form of template having five different rail top radii. This instrument is used to make a quick check to compare the actual radius of the rail top, before and after grinding operation.

(4) **Digital Inclinometer –** This is used to know the angle of grinding stone at a particular point on the rail surface. By simply keeping the instrument at a particular location, the angle will be known in digital form.

(5) **Surface Roughness Measuring Gauge –** Roughness after grinding is high. This gauge measures the roughness of rail. Roughness after grinding should be within acceptable limits (less than 12 micron).

(6) **Rail Hardness –** The grinding should not cut the head hardened layer from rail top completely. This will increase wear rate after grinding. This instrument is used to measure hardness before and after grinding.

507 Working of RGM

(1) Feeding of Track Data-

(a) The track, prior to grinding, is surveyed and track data fed in anexcel sheet, as per proforma enclosed at A**nnexure 5.3,** and e-mailed to RDSO.

(b) The formatting of field data to GDMS format for use in RGM is done by RDSO.

(2) Patterns and target profiles are pre-fed in the machine. Thesecan be modified, if required.

(3) Pattern for first pass is as recommended by Loram. Curves require 3 passes during the same block. The pattern for second and third pass on curves is suggested by GDMS on the basis of Rail profile achieved after previous pass and final target rail profile (CPC/CPF/HRS/HRM) desired for the track geometry at that location.

(4) RGM can work in either direction. Therefore, direction of machine is not required to be changed for second and third pass in curves.

(5) Since lot of sparks are generated during grinding and there is fire hazard associated with grinding, due precautions should be taken in this regard.

508 Quality Inspection of Grinding - It is essential to monitor quality of grinding. Following methods are used for assessing the benefit of grinding and grind quality achieved.

(1) Test Site Monitoring – A typical test site is represented in the Fig 5.6 below. It consists of stretch of track covering three sleeper spacings divided into three parts – first for measuring rail profile by MINIPROF (Marked as MP), second for taking surface photographs and the third for doing Dye Penetration Test and taking DPT photographs.

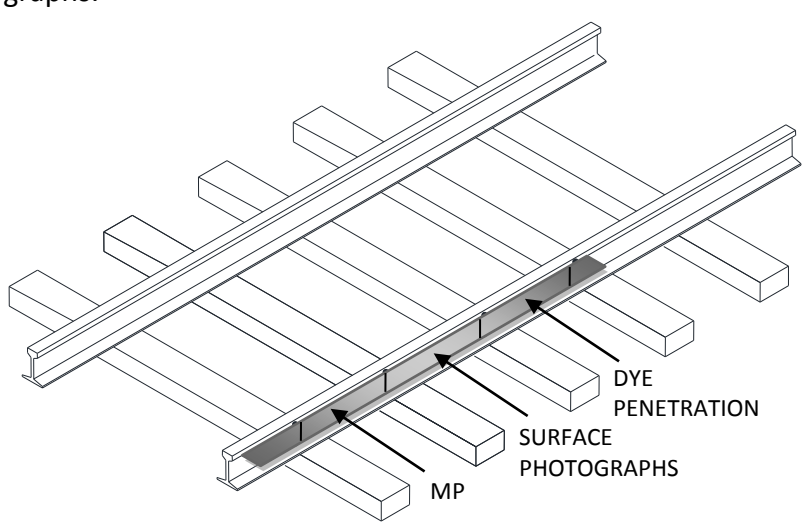

Fig. 5.6

(a) **Test Site –** Each test site is selected so as to be representative of 20 or 50 km length of track. Inter-distance of the test sites will depend on the variation in the features in that section as explained below, along with some more requirements of test site:

(i) Separate test sites should be chosen for different track structures (52 kg/60kg.

(ii) For any major change in gradient or formation structure, separate test site should be selected,

(iii) Typically one SSE/P.Way section should have minimum one test site each for mild curve, sharp curve and tangent track.

(iv) Test site should be accessible by road for ease of taking measurements.

(v) The rail of the test site should not be due for renewal in next 3-4 years.

(vi) It should be away from signals, level crossing, yards, bridges etc. so that it is on a stretch on which traffic normally moves at normal speed of the section.

(b) **Measurement by MINIPROF –** The first portion of the test site is marked as 'MP' and an arrow is painted here. This is the location where rail profile will be measured every time before and after the grinding. The closer is the achieved profile of the rail to the target profile after grinding; the more will be the benefits accruing from it. It is essential to monitor the deviation of the post grinding profile with the target profile. This will also help in making a decision on the choice of the pattern for the future grindings.

(c) **Monitoring Contact Band –** The location of contact of the wheel on the rail should change after the grinding. The rail-wheel contact band indicates this. Most of the wheels should make a contact on rail in a desired width on the railhead. Therefore, a clear change in contact band location and size shouldbe visible after the grinding. The contact band is to be monitored in curve and on straight track before and after grinding. Identification of contact band on railhead is done by spraying paint or making chalk marks on rail surface and allow a freight train pass over it. This will manifest in a form of erasing of the paint or chalk covered area in a band like formation. Details of location, date, width of contact band, distance from gauge face etc. Shouldbe written and a photograph showing contact band and details written on rail foot is taken for record.

(d) **Dye Penetration Test –** At the second portion of the test site, dye penetration test is done, so that the damage on the rail surface including the cracks will become prominent. Dye penetration test is carried out before and after grinding. Extent of reduction in number and length of cracks indicates the efficacy of the grinding.

(1) Other Quality Checks

(a) **Monitoring Rail Surface Finish –** The condition of the rail top after grinding gives a lot of clues about the quality of grinding. A good finish should have regular grind marks of the grinding stones (these are known as facets) with silver finish. A bad finish will have irregular marks or skipped grinding at regular interval or blue colour on rails at certain locations (known as blueing defect) or irregular facet width etc. The facet width (the width of the marks left by grinding wheels) should be about 10 mm in the centre of the rail and 4 mm at the corners.

(b) **Surface Roughness after Grinding** – The rail surface should not become too rough after the grinding. The surface roughness level should not go beyond 12 microns after grinding.

(c) **GQI before & after Grinding** – GQI stands for Grind Quality Index, which is a measure of the efficacy of the grinding with respect to the target rail profile. The GQI value 100 indicates that the target profile has been achieved fully. The lower the value, the more is the deviation from the target profile. During the run, GDMS screen displays GQI for both the rails before and after grinding separately. GQI of 80 and above is considered acceptable.

(d) **Crown radius** – Crown radius of the railhead is measured before and after grinding by star gauge. The crown radius should be closer to 250 mm at centre of railhead after grinding.

(e) **Monitoring at RDSO** – Performa enclosed as **Annexure 5.4** is to be filled by field units and sent to RDSO every time before and after grinding. RDSO shall study the data received from different railways and decide on appropriate grinding parameters and grinding cycle. The proforma may be revised by RDSO, based on the experience gained.

509 Preparatory Works for Introduction of RGM

(1) Arrange for proper stabling facilities for the machine at about every 50 km distance.

(2) Identify the Railway Consumer Depots (RCDs) and plan for timely supply of diesel to the machine.

(3) Make the arrangements for supply of water (75000 litres) to the machine.

(4) Plan for the adequate traffic blocks for the working of the machine.

(5) Arrange for all the equipment for taking the required measurements.

(6) Collect the track data for feeding in GDMS software installed in the machine.

(7) Note down chainages of the level crossings, SEJs, Points & Xings, Axle Counters, start and end of curves. Direction of track measurements for collecting details should be considered in the direction of increasing km, irrespective of direction of movement of traffic on that line.

(8) Find out history of the rail wear, surface damage on the rail, USFD defects, rail/weld failures etc. in the section where grinding is being done and study the changes in these parameters as the grinding is done.

(9) Identify the stretches of the track which will be skipped during grinding like rails planned for renewal in next two years, e.g. rails having severe corrosion and liner bite corrosion etc.

(10) Establish test sites.

(11) Open a separate file for each test site in your section.

510 Pre-Block Activity Before Deploying RGM

(1) Paint the sleeper prominently on either side of the SEJs, axle counter, points and crossings, level crossings and at the start and end of the curve for easy identification by the SSE/JE/TM while grinding.

(2) Ensure effective communication between FCC, RCC and staff on the ground.

(3) Counsel the staff and gatemen to keep everyone away from the machine during its working to avoid injury from flying sparks and iron dust.

(4) Counsel the staff working on track as well as the RGM to use safety gadgets such as helmet, goggles, reflective jackets, shoes etc. during RGM working.

(5) Measure the rail profile with MINIPROF, carry out DPT and take surface photographs at each test site before grinding (say around 15 days prior). Keep these details in the file chronological.

(6) While filling diesel, ensure that diesel does not spill onto the rubberized spark guards, which may cause fire during grinding.

511 Operation During RGM Block

(1) On the Track

(a) Follow on a motor trolley behind the grinding machine and lookout for the fire in track or on cess and take necessary action.

(b) Check for the quality of surface finish visually for any irregular grinding, blueing of the rail, skipped grinding etc.

(c) See the facet (grinding marks band) width is about 4 mm at the corners and about 10 mm at the centre of the rail.

(d) Check the surface roughness at bad locations and see that it is not exceeding 12 microns.

(e) Check the profile at few places on straight and in curves after grinding with bar gauge and check how close or away are these from the target profile. See whether the profiles are within prescribed tolerances or not.

(f) Check the rail crown radius with the star gauge, the desirable radius being about 250 mm.

(g) Check the contact band in straight and curve track at one or two locations before and after grinding using paint/chalk in every block in addition to test site. Take a photograph and keep for record.

(h) See that the dust collection system is working properly.

(i) Inform any irregularity noticed to the SSE/JE/TM, and get it rectified.

(j) Ensure that a train with inflammable material is not allowed on adjacent track during the grinding operation, in case of double/multiple lines.

(2) On the Machine (SSE/JE/TM)

(a) Check whether the angles of motor, calibration of tachometer and calibration of Optical rail profile measuring device (KLD) has been done by the SSE/JE/TM as per the schedule.

(b) Check the proper functioning of the water pump and water cannons etc.

(c) Check that all the motors are working properly through the indication on HMI panel.

(d) Make a chart in advance for the pattern to be selected during the first pass of the grinding.

(e) Synchronize the chainage of the track on the machine before starting and during the working, as required.

(f) Check that the patterns being selected by the SSE/JE/TM are correct.

(g) See that the grinding speed is correct.

(h) Check that the SSE/JE/TM sequences the motors up and down correctly and promptly at the location of obstructions.

(i) Check whether the direction of the curve in GDMS software is same as existing on the ground. Do not use GDMS suggested patterns for the second and the third pass on the curve in case the direction is wrong as it may spoil the surface profile. Choose the pattern manually.

(j) Make sure to remember to get the GDMS data corrected if the direction of curve is found to be wrong, so that the similar problem is not repeated during the next cycle.

(k) See that the patterns are changed promptly by the SSE/JE/TM on entry and exit of the curves.

(l) Check the GQI before and after grinding to check that there is improvement in GQI after grinding.

(m) Learn the working of GDMS software including recommendation for the pattern and speed for the second and third pass on curves.

(n) Check the pattern in use on the monitor, in real time.

(o) Look for any alarm on HMI of the machine and see that the SSE/JE/TM takes corrective action promptly.

(p) While starting the grinding, the buggies should be lowered on straight track only to ensure that the buggy wheels sit properly on rails. In case of curve, due to different wheel base of the buggy as compared to the wagon, the wheels may go off the rail on lowering. For the same reason, the raising of the buggies is also done on straight track only.

512 Post Grinding Operation

(1) Take rail profile after grinding not later than 15 days at the test sites.

(2) Carryout DPT test at test site within 10–15 days after grinding and take a photograph. Keep in file.

(3) Take a surface photo at test site within 10-15 days after grinding and keep in file.

(4) Preserve the soft copies of MINIPROF measurements and photographs.

(5) Superimpose the rail profiles before grinding and after grinding taken by MINIPROF on target rail profiles and analyze the results to calculate the metal cut and deviation from target profile.

(6) Ensure safe disposal of the grind dust in a yard.

513 Utility Track Vehicle

(1) **General –** It is a self-propelled 4-wheeler vehicle with crane used for loading and unloading and transportation of P.way materials like rail, sleeper and other heavy materials. It has the capability to attach and haul one BFR or similar railway wagon for holding the material. Sketch of UTV with main components can be seen in figure 5.7.

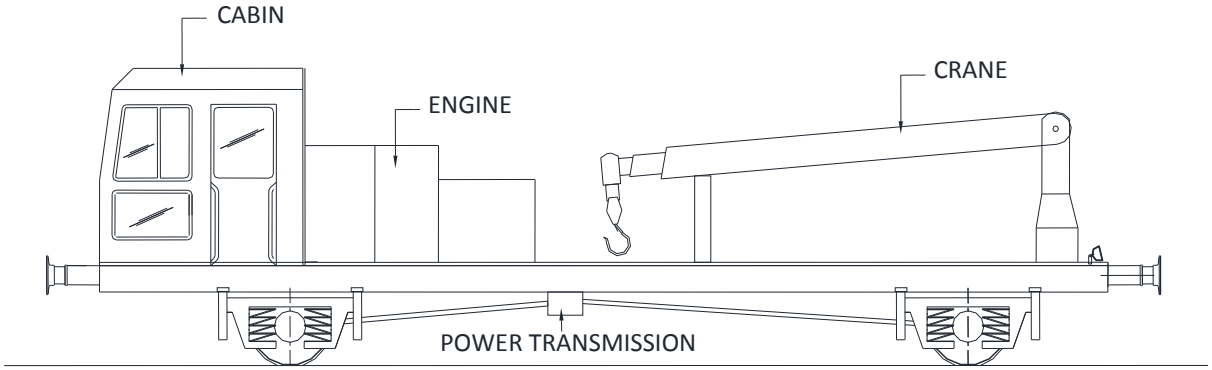

Fig. 5.7

(2) Main Assemblies of UTV and their Functions

(a) **Cabin –** Cabin is provided on one side only. The cabin has seating arrangement for staff.

(b) **Platform –** Platform is the flat portion of the UTV, where material can be stacked. Loading and unloading of materials can be done either on the platform or on railway flat wagon attached with UTV.

(c) **Crane –** There are different models of UTVs. Some of the earlier models of UTV had mobile crane (crane with tyred wheels mounted on flat wagon) of capacity of 1.5 t at 7.5 m radius. Current models have fixed type of crane. It is installed on platform, having multi stage extension. Crane has its own power pack for its operation. The crane capacities of some machines are 1.5t at 7.5 m radius i.e. 11.25 tm while of others is 2 t at 7.5 m radius. It is further planned to increase the crane capacity for handling a set of stock and tongue rail (3 t at 7.5 m i.e. 22.5 tm).

(d) **Engine –** The vehicle has one diesel-operated prime mover with water-cooled engine for the driving the vehicle and also for crane operation.

(e) **Power Transmission –** Hydrodynamic power transmission system provided for transit driving and for working in the section. Both axles of vehicle are powered.

(f) **Brake System –** Following brake system is provided on UTV Machine:

(i) **Direct Brake (service brake) –** This brake is applied directly by hand operated valve (SA9) to all brake cylinders of both the axles through pneumatic relay (C2W) when machine is running.

(ii) **Indirect Brake for Coupled Coach/Wagon –** Indirect brake (A9) is applied on both machine and coupled coaches/wagon in new machine. In old machine, this brake is applied separately for camping coach/wagon, in addition to machine brake.

(iii) **Parking Brake** – Two spring loaded separate cylinders are mounted on both the wheels of one axle of the machine. This brake is applied automatically when air of these cylinders released or when air system pressure drops below 3.5 bar.

(iv) **Emergency Brake** – This is applied directly on the machine in the case of emergency for immediate stopping.

(v) **Vacuum Brake –** A separate power pack with own circuit is provided and applied when camping coach/wagon is having vacuum brake system.

(3) **Models of UTVs –** Presently 7 models of UTV's of different manufacturers are working over Indian Railways. The sketch of each machines with dimensional detail is enclosed at **Annexure-5.5**

(a) UTV-502 with mobile cranes by Tamper Corporation, USA.

(b) UTV with fixed crane (11.25 tm capacity) by Phooltas Tamper, India.

(c) UTV with mobile crane (11.25 tm capacity) by Phooltas Tamper, India.

(d) UTV with fixed crane (15 tm capacity) by Phooltas Harsco, India.

(e) UTV by BEML India.

(f) UTV by BHEL India.

(g) UTV by OEPL India.

(h) UTV by Trident Engineering (11.25 tm).

(i) UTV by SAN Engineering (11.25 tm).

514 Rail Borne Maintenance Vehicle

(1) **General –** Indian Railway RBMV manufactured by Phooltas. This is an 8 wheelers vehicle designed for running at maximum speed of 105 kmph. This is designed to carry men, material and tools and plant to worksite for attention of track. Sketch of RBMV with main units are shown in Fig 5.8. The dimensional detail of RBMV in Indian Railways is given in **Annexure 5.6**

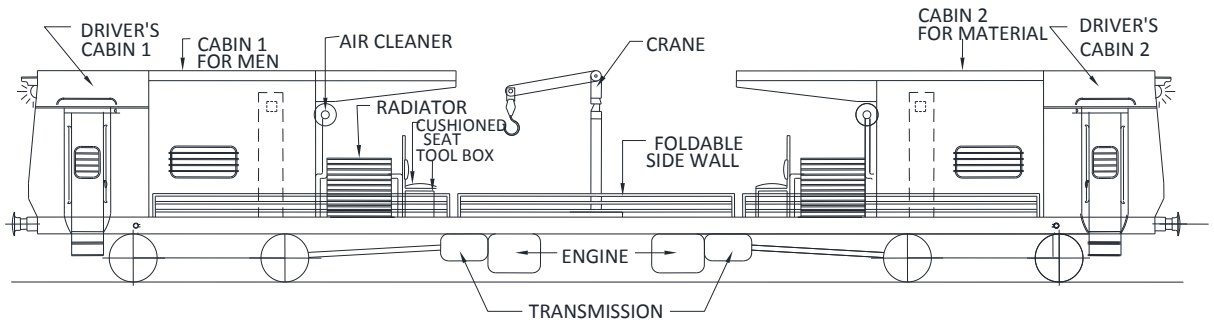

Fig.5.8

(2) **Main Assemblies of RBMV and their Functions**

(a) **Drive Cabin –** One driving cabin each is provided at both ends of the vehicle for driving ineither direction.

(b) **Cabin for Men and Material –** Two additional cabins are provided, one for keeping P. Way materials, tools and plant and other for crane operating cabin with staff seating arrangement. 12 Nos. of staff can be accommodated in the staff cabin.

(c) **Crane –** One hydraulic pillar jib crane is installed on this vehicle in the middle of flat platform, having multi-stage extension. Crane has its own power pack for operation. Loading and unloading of materials is done on own platform as no BFR can be attached with RBMV.

(d) **Engine –** The vehicle has two diesel engines, which are in under slung position; Cummins model No. NTA855R. Each engine drives one bogie through independent power transmission.

(e) **Power Transmission –** RBMV has two hydrodynamic power transmission systems provided for driving as well as working in the section. These transmission systems are powered by independent prime movers giving power to each transmission gearbox.

(f) **Brake System –** Following brake system are provided on RBMV Machine:

(i) **Direct Brake (service brake) –** This brake is applied by control lever SA9 on the both bogies of the machine through pneumatic relay C2W while running.

(ii) **Indirect Brake –** This is indirect brake is applied on machine with coupled camping coach /wagon automatically through pneumatic relay C2W when air pressure of BP line releases through valve A9 or drops.

(iii) **Parking Brake –** Two springs loaded separate cylinders are mounted on each bogie of machine. This brake is applied automatically when air of these cylinders released or when air system pressure drops below 3.5 bar.

(iv) **Emergency Brake –** This is applied directly on the machine in the case of emergency for immediate stopping.

(3) Salient Features of RBMV

(a) It has payload capacity of 15 t.

(b) It has space for carrying 2 rails of 13 m length of 60 kg or two sets of switch and stock rail assembly along with fittings.

(c) One cabin to hold small track machines, tools and equipment, P.Way materials as listed for Mobile Maintenance Unit (MMU).

(d) Seating arrangement (12) for officials accompanying RBMV in the other cabin.

(e) Fitted with hydraulic crane for material handling with 1 t at 8 m lifting capacity.

(f) Has diesel operated Portable generator of 5 KVA for general lighting, welding & other works.

515 Works required Before, During and After Deployment of UTVs and RBMVs

(1) P.Way materials to be handled should be collected and stacked at locations within the reach of crane boom in advance.

(2) Availability of material handling slings and other such attachments should be checked and ensured before going for the block.

(3) Support posts in flat wagons with UTV's /foldable side wall in RBMV's which infringe in loading of material shall be lowered before starting material handling at site.

(4) Centre line of rail piece to be handled shall be marked.

(5) Longer rails shall be cut to pieces of less than 13 m length.

(6) It should be ensured that the vehicle is stabilised and parking brakes are ON before operation of the crane.

(7) The crane should not be used in strong wind blowing at more than 50 kmph.

(8) The operator should have a clear view of the work area and ensure that no one is there within the operating radius of the crane.

(9) The stability of the crane vehicle should be constantly checked during the manoeuvres.

(10) The operator should check the details of load to be lifted and the radius of operation as per the load distance diagram.

(11) The operator should be careful while working near electric power cables.

(12) The operator should never leave the machine unattended when boom is extended and the load is lifted from the ground. If it becomes unavoidable, he must manoeuvre the load to ground and turn-off the vehicle.

(13) Loading/unloading and material handling should preferably be done to/from cess side of track. In case of handling material in between two tracks or beyond on adjacent running track side, proper track protection on adjacent track should be done.

(14) Crane movement to infringing side shall be locked during working.

(15) The single point slinging should be avoided to avoid risk of bending and damage to rail surface. The overhang should not be more than one half the distances between two lifting points.

(16) Loading of rails and sleepers on BFR in UTV's & on RBMV's should normally be limited to 4 and 3 layers respectively.

(17) The rails should be kept horizontal and straight while lifting/moving.

(18) Support posts/foldable side wall if any shall be lifted up or rails shall be tied up with chain to secure rails after completion of loading, before movement.

(19) Loading should be uniformly distributed and eccentric loading should be avoided.

(20) Crane shall be handled carefully in the electrified territory and station yards.

(21) The staff should not stand below the suspended load for their safety.

(22) The staff should wear protective gloves and industrial shoes to minimise the risk of injury.

(23) Items specific to UTVs

- **(a)** SSE/JE(P.Way) should work as guard on the machine. The guard along with the machine staff should be deputed on the BRN for safety when the machine moves towards the crane side with an attached BRN.
- **(b)** The flat wagon should have a valid BPC for the movement.
- **(c)** BRN should be provided with detachable hand brake operating lever.

(24) Items specific to RBMVs

- **(a)** All tools and plants as prescribed for Mobile Maintenance Unit (MMU) should be available in working order.
- **(b)** Pay Load should not be more than 15 t.

The staff should wear distinctive colour helmets and clothing for easy identification by crane and machine drivers to avoid accidents.

Annexure 5.1

Important Features/Dimensions of RGI Control Car

RGI CONTROL CAR

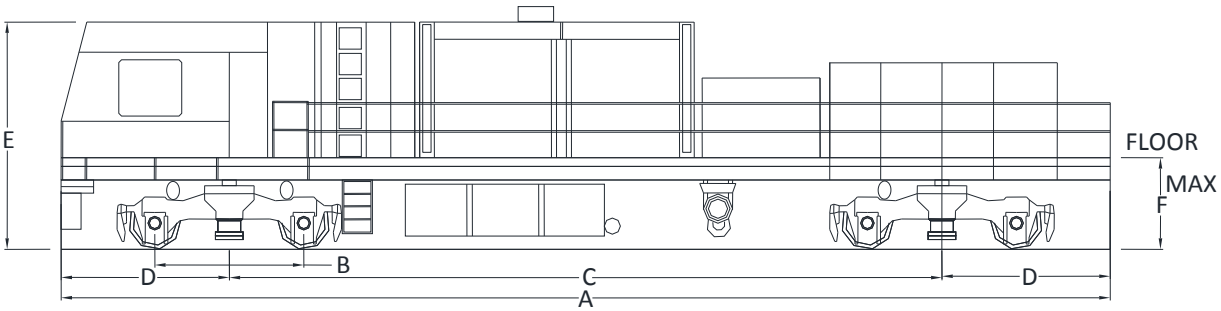

NAME OF MACHINE	A	B	C	D	E	F	G	WHEELDIA	AXLE LOAD	WIDTH
RGI CONTROL CAR	19304	2743	13114	3095	4104	1683	–	1000	22.75t	–

RGI GRIND CAR

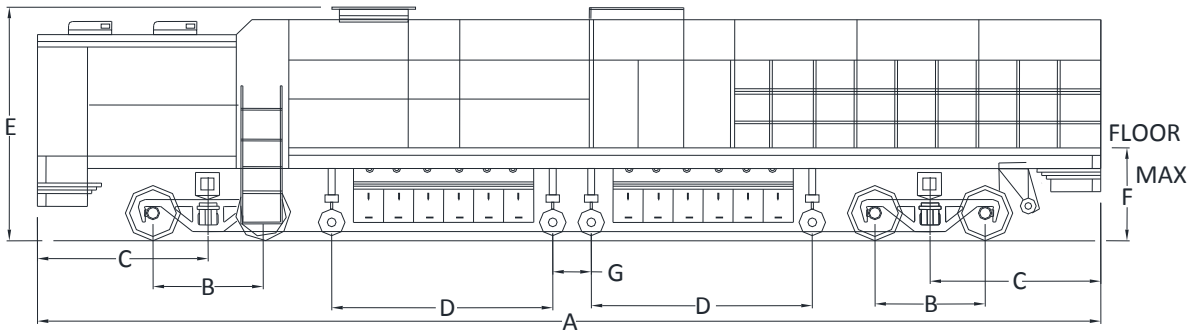

NAME OF MACHINE	A	B	C	D	E	F	G	WHEELDIA	AXLE LOAD	WIDTH
RGI GRIND CAR	19304	2000	3099	4013	4231	1683	–	1000	20.0t	–

Annexure 5.2

Pattern Sheet

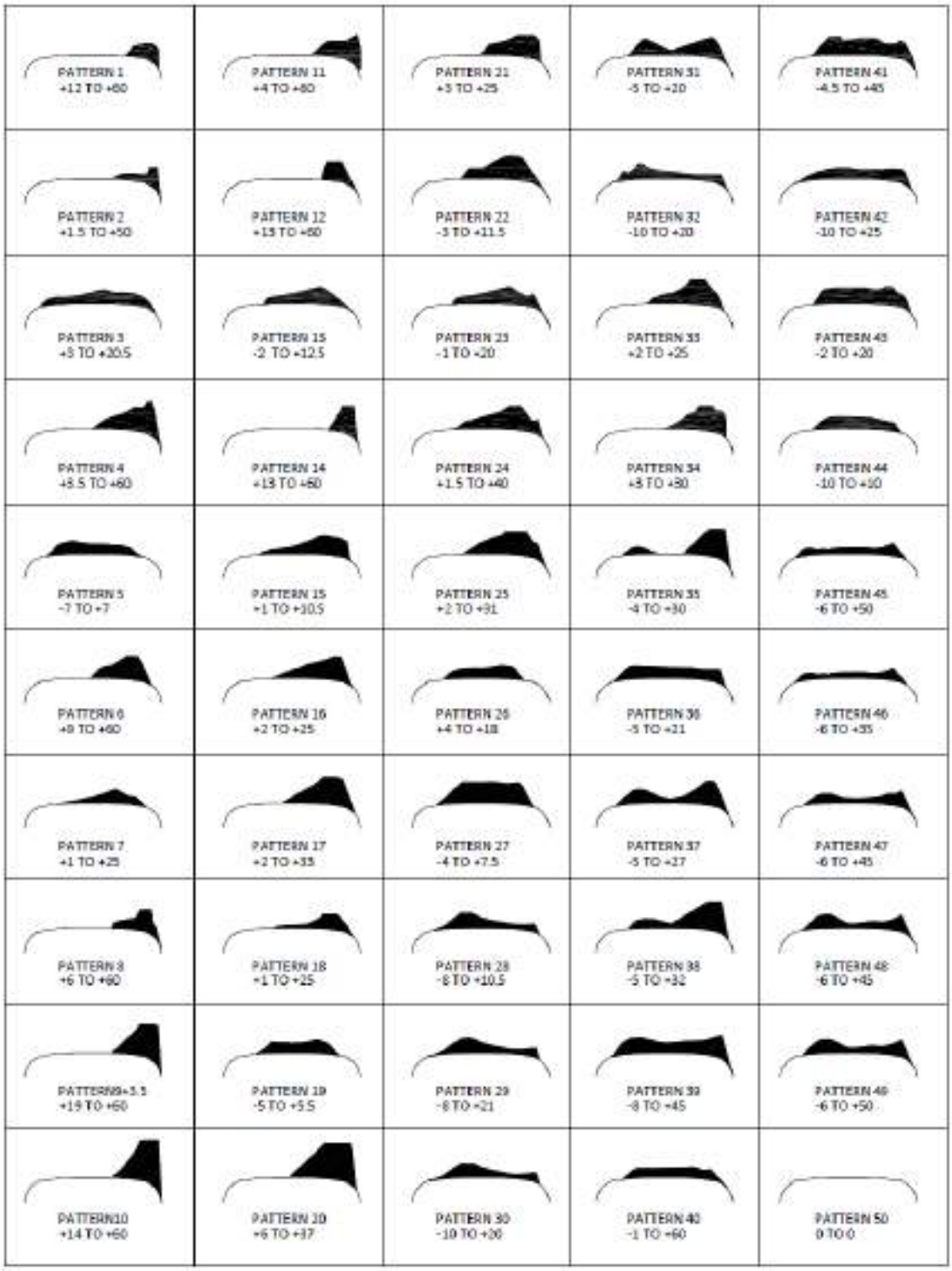

Annexure 5.3

Performa for Data to be fed in GDMS

Id	Line Seg	Region	Division	Subdivision	Track	Start	End	Km	Start M	Length	Curve Num	ST	TC	CT	TS	Versine	Super Elev	Degree	Curve Dir	CX Num	Cx Loc	Cx Width	Station	Sta Loc
1																								
2																								

Prefix:

Sub Division	Start & End	Length	Cx Loc/Width
AEN Sub Div Section	Sub Div Sec KM	KM Chainage in mtrs	Level Crossing Location & Width

Prefix:

ST		TC	CT	TS
Start Transition		Start Circular Curve	End Circular Curve	Transition to Straight
		Transition End	Start Transition	End Transition

Note: Consider following steps:

1. Curve details in km point in meter format up to 3 digits
2. In compound curve both curve bifurcate by at least 1 m.
3. For UP and DN track complete details in increasing km
4. Transition-Curve-Transition should be at least 1 m apart.
5. Single curve is in 1 line (starting km).
6. Complete GDMS Data in sample of 25 column format considering prefix details given in sample format.

Column	Data Column	Data Type	Importance	
1.	Id	Text	Recommended	The row number in the file. An aid to editing.
2.	LineSeg	Text	Required	User provided name of the track line segment. Names should be letters, numbers, underscore or dash.
3.	Region	Text	Required	Railroad Region.
4.	Division	Text	Required	Railroad Division
5.	Sub Division	Text	Required	Railroad Subdivision
6.	Track	Text	Required	Track Name. Typically UP, DN, SL, 1, 2, 3, etc.
7.	Start	Float	Not Used	The start Sta+Off of track segment.

Column	Data Column	Data Type	Importance	
8.	End	Float	Not Used	The end Sta+Off of track segment.
9.	Km	Int	Required	An integer value specifying the kilometer location.
10.	StartM	Int	Not Used	
11.	Length	Float	Required	The length in meters of the specified kilometer.
12.	CurveNum	Text	Not Used	Curves are named by the program based on the curve start point.
13.	ST	Sta+Off	Required	The first point of the curve.
14.	TC	Sta+Off	Required	The second point of the curve.
15.	CT	Sta+Off	Required	The third point of the curve.
16.	TS	Sta+Off	Required	The fourth point of the curve.
17.	Versine	Float	Required	The Versine of the curve.
18.	Super Elev	Float	Not Used	
19.	Degree	Float	Required	The degree of the curve.
20.	CurveDir	Text	Required	Either RH or LH indicating the direction of the curve.
21.	CXNum	Text	Optional	The crossing name. Ignore if Cx Loc is missing. If missing and a Cx Loc is provided, the crossing is given a unique number.
22.	Cx Loc	Sta+Off	Optional	The crossing location.
23.	Cx Width	Text	Optional	The crossing width of description.
24.	Station	Text	Optional	The name of the station. Ignored if Sta Loc is missing. If missing and a Sta Loc is provided, the station is given a unique number.
25.	Sta Loc	Sta+Off	Optional	The location of the station.

RULES:

Unknown data fields should be left blank. Do NOT enter periods (.), dashes (-), etc.

Sta+Off-Track positions are entered in station+offset format. Where offsets are less than 1000 meters floating point format is also allowed, For example, a crossing located at 781 meters past kilometer post 4 could be entered either as 4+781 or 4.781, however a curve point located at 1025 meters past km post 12 must be entered as 12+1025. Curve point (ST, TC, CT, TS0 must be in ascending or descending order and cannot be equal. Adjacent curves must be separated by at least 1 meter. The body of the curve (TC-CT) should be at least 20 meters. Names of LineSeg, Region, Division, Subdivision and Track are case – sensitive. The Versine and Degree of curve must match within one half a degree.

Annexure5.4

Rail Grinding Monitoring Proforma

(A) For Sites Identified for Monitoring

Rly……Divn……. ……. Section…… Km/TP……

Rail Section/ UTS…… Type of sleeper……Sleeper Density…… Ballast cushion……

Tangent/Curved Track……. Degree of Curve……..Line(UP/DN)……..Axle Load……

Total GMT carried…… GMT(Current)……. Date of last Grinding……Gauge(in mm)……

S.No.	Item	Observations on Left Rail		Observations on Right Rail		Remarks
		Before Grinding	After Grinding	Before Grinding	After Grinding	
A	Visual Inspection *					
	1.Gauge corner chipping.					
	2.Flow of rail top / Burring					
	3.Gauge corner fatigue cracks					
	a) Pitch(mm)					
	b) Length(mm)					
	4.Wheel burns and Scabbing					
	5.Any other defect observed					
B	Corrugation					
	1.Pitch (mm)					
C	Hunting					
	Pitch of cycle					
D	Type of contact of wheel on Rail					
	One point contact					
	a)Width (mm)					
	b) Position (Centre line) from gauge face side (mm)					
	Two point contact					
	a)Width (mm)					
	b) Position (Centre line) from gauge face side (mm)					
	Multiple point contact					
	a)Width (mm)					
	b) Position (Centre line) from gauge face side (mm)					
	Contact patch					
	a)Width (mm)					
	b) Position (Centre line) from gauge face side (mm)					

S.No.	Item	Observations on Left Rail		Observations on Right Rail		Remarks
		Before Grinding	After Grinding	Before Grinding	After Grinding	
E	Wear pattern of rail					To be measured by MiniProf Rail Profile measuring equipment and soft copies of rail profiles be sent.
	1.Gauge face					
	2.Top table					
F	Track Geometry					
	Gauge					
	Cross level					
	Unevenness					
	Alignment					

*Photograph of the test locations after DPT indicating condition of rail be sent.

Rail Grinding Monitoring Proforma

(B) Route Specific

Rly…….. Divn…… Section……. From Km/TP……To Km/TP… Line(UP/DN)……. Type of Rails……Vintage of rails … …Type of sleeper…… …Sleeper density……. Ballast cushion…… Date of last Grinding…… Total GMT carried ……. Annual GMT…….. Axle Load…….

S. No.	Item	Tangent Track		Curved Track			Remarks
		Left Rail	Right Rail	Degree of curve	Outer rail	Inner rail	
A	Full details of Locations of Rolling Contact fatigue (Head checks), Corrugations, and Hunting on Left Rail and Right Rail for complete route						Details be enclosed as per the format in terms of Km/TP and chainage ex Km/TP.
B	USFD Testing **#**						
	1. No. of IMR defects in rail						
	2. No. of OBS defects in rail						
	3. No. of IMRW defects in weld						
	4. No. of OBSW defects in weld						
	5. Defect generation rate (DGR) of rails/km/ GMT						
	4. Defect generation rate (DGR) of welds/km/ GMT						
C	No. of fractures **#**						
	1. Rail						
	2. AT weld						

	3. FB weld						
S. No.	Item	Tangent Track		Curved Track			Remarks
		Left Rail	Right Rail	Degree of curve	Outer rail	Inner rail	
D	Track Geometry						
	1. SD of Gauge						
	2. SD of Cross level						
	3. SD of Unevenness						
	4. SD of Alignment						
E	Wear pattern of Wheels	To be measured by MiniProf Wheel Profile measuring equipment and soft copies of wheel profiles be sent.					

The details shall be provided for the duration between two grinding cycles. In case of first round of grinding, data for same duration preceding grinding operation be given.

Annexure 5.5

Important Features/Dimensions of Utility Track Vehicle &Rail Borne Maintenance Vehicle

UTILITY TRACK VEHICLE

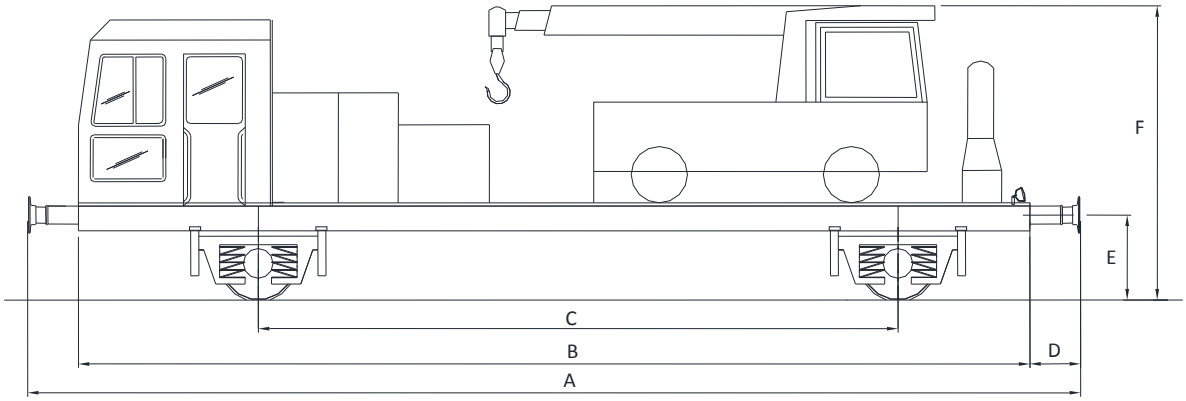

NAME OF MACHINE	A	B	C	D	E	F	WHEEL DIA	AXLE LOAD	WIDTH	REMARKS
UTV(PHOOLTAS)	13170	11900	8000	635	1050	3950	915	20.0t	3000	WITH MOBILE CRANES
UTV(PHOOLTAS)	13170	11900	8000	635	1050	3550	915	20.0t	3000	WITHOUT MOBILE CRANES
UTV(OEPL)	10270	9000	6500	635	1067	3830	915	13.5t	2900	
UTV(BEML)	12120	10850	7000	635	1150	3550	915	15.0t	3002	
UTV(BHEL)	9770	8500	6100	635		4115	1092	20.0t	3050	

ALL DIMENSIONS ARE IN mm.

RAIL BORNE MAINTENANCE VEHICLE

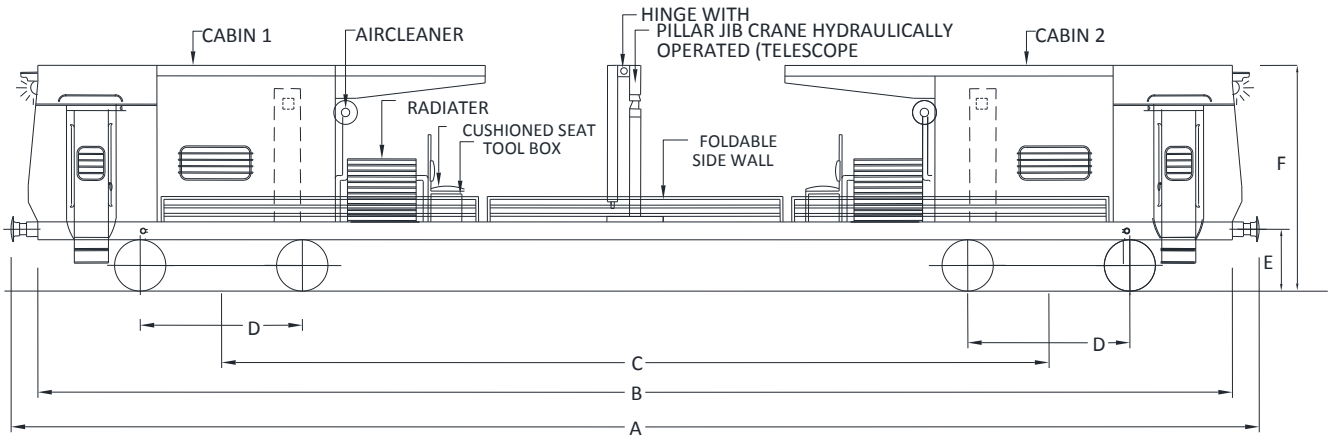

NAME OF	A	B	C	D	E	F	WHEEL	AXLE LOAD	WIDTH
RAIL BOUND MAINTENANCE VEHICLE	22270	21000	14783	2896	1105	4125	952	18.25t	3245

ALL DIMENSIONS ARE IN mm.

CHAPTER 6

PLANNING AND DEPLOYMENT

601 Planning

(1) Working and deployment of all track machines in a Zonal Railway shall be under overall control of CE/TM.

(2) By 5th Feb every year (after the Budget), Sr. DEN/Co-ordination of divisions will send to CE/TM, their requirement plan for the track machines, for a period of 18 months starting from 1st April of coming year, based on maintenance needs, track renewal needs, etc., keeping in view the various aspects detailed below. Likewise, the construction organizations, PSUs and other agencies will also project their requirement for the coming financial year. Draft deployment program for CTR/TSR shall be drawn out by the office of CE/TM once the targets are prepared and discussed with Railway Board and this shall be sent to the divisions and other units.

(3) The annual programme shall be prepared for the period of 18 months – firm programme for 12 months commencing from 1st Apr of the first year and tentative program for 6 months of second year starting from 1st April of second year i.e. programme drawn in Feb'17 will be up to 30th Sep'18 – firm programme for 12 month period from 1st Apr'17 to 31st Mar'18 and tentative for 6 months period from 1st Apr'18 to 30th Sep'18. This will help the divisions to finalize the tenders for support activities in time.

(4) In drawing the programme, the following aspects shall be taken into consideration

(a) Base depot locations for TLE/TRT etc.

(b) Loco requirements, and loco power availability.

(c) Block requirements, and block availability.

(d) Ballast needs and supply prospects.

(e) Speed restrictions.

(f) Working season.

(g) Output of individual machines.

(h) Effective availability of machines, taking into account slots for POH/IOH, major repairs and shifting, etc.

(i) Priorities/targets for completion of projects/works.

(j) Co-ordination with and requirement of S&T and TRD branches.

(k) Any other factor having a bearing on machine utilization.

(5) **Targets –** Annual targets for each type of machine are fixed by Railway Board in consultation with zonal railways. The factors which are to be taken in deciding the targets is:

(a) Track maintenance works due at the beginning of the year.

(b) Track renewal targets.

(c) Availability of machines on the railway taking into consideration the planned maintenance operations like POH and IOH.

(d) Availability of traffic blocks including corridor blocks.

(e) Progress per machine per month for past 3 years on the railway.

(f) Progress per machine per month for past 3 years on Indian Railway.

(g) Age of the machine.

(6) Requirement of the divisions, construction organizations, PSUs and other agencies etc. shall be examined by CE/TM in consultation with the CTE at the Zonal HQ and draft deployment program for 18 months – firm program for 12 months in addition to tentative program for 6 months shall be issued by 25thFeb every year. The division should study and inform of any changes and/or correction to draft deployment plan within 15 days. CE/TM will issue the final deployment programme, after examining the suggestions by the divisions.

(7) The Divisions and Construction units on receipt of the deployment plan shall initiate all preliminary works such as development of base depots, finalization of contracts, arranging blocks, locomotive, drawing MOUs, collection of matching materials, ballast collection, co-ordination with other branches, machine staff accommodation, procurement of consumables like diesel oil etc. so that no time is wasted once the machines reach the site.

(8) The machines on arrival in the section/divisions/construction units shall be deployed as per the approved deployment program, their progress closely monitored, works completed in time and machines handed over to the next work site as per the program. Any deviation from the approved program, which should be an exception, shall be got approved by CTE or CE/TM in advance. Copy of deployment program at HQ and divisions shall be corrected accordingly.

(9) Sr.DEN/Co shall arrange for expeditious movement of machines in their respective divisions as per the approved program. Sr.DEN/DEN of the section shall ensure timely completion of all preparatory works in the section where the machine is due to arrive.

(10) Whenever machines of other Divisions/Railway are passing through a division, Sr.DEN/Co of that division shall arrange for expeditious movement of machines in his division.

602 Pre-requisites for Deployment of Track Machines on Construction Projects/Other Agencies

(1) Requisite track geometry standards shall be ensured before deployment of track machines on construction projects: -

(a) Track laying standards in respect of gauge, joints, expansion gaps and spacing of sleepers for the new track as specified in Para 316 of IRPWM should be followed.

(b) A minimum clean ballast cushion of 250 mm on main line and 150 mm for yard line along with adequate ballast on shoulders and cribs should be ensured before deploying the tamping machines.

(c) Proper recording of levels and versines should be done by a trained personnel and lift & slews values should also be calculated in advance for lining/ levelling for design mode of tamping.

(d) The track geometry prior to deployment of track machines for new works of new line, doubling, gauge conversion etc. should be as under: -

Peak value of Unevenness	15 mm on 3.6 m Chord
Peak value of Twist	15 mm on 3.6 m Chord
Peak value of Alignment	15 mm on 7.2 m Chord

(e) The above track geometry standards are not safety/slow down tolerances but are only a prerequisite for deployment of track tamping machines for better machine productivity and their optimum utilization.

(f) For achieving the track geometry parameters as above, suitable small track machines such as off-track tampers etc. may be used. Recording of achieved track parameters should be done using motorized trolleys.

(2) The track should be certified fit for a speed of 30 kmph before deploying tamping machine.

(3) On receipt of request from Dy. CE/(C), Sr.DEN will direct joint inspection of track to be done by AEN(C) and AEN/XEN/TM.

(4) Based on the joint inspection, Dy. CE (C) shall certify the track geometry as mentioned above, before deploying the track machines, after attending to deficiencies, if any. Sectional Sr.DEN/DEN shall confirm suitability of track for deployment of machine(s) by field verification or otherwise before machine is deployed.

(5) Two rounds of tamping along with consolidation by DTS should be carried out at construction projects prior to opening of section.

(6) After opening of section for traffic, another round of tamping along with consolidation by DTS may be done on need basis.

603 Inter- Railways Deployment

(1) All Inter-Railway transfer of machines will be done with the approval of Railway Board only.

(2) When machines are deployed to work in other Railways for short duration (up to a period of 2-3 months), the "Owning Railway" shall send the machine with necessary staff required for working. The zone receiving the machine shall associate its staff to pilot the machine for movement in its jurisdiction. Oils and consumables and spares required for operation shall be supplied by the user Railway. Major repairs shall be

the responsibility of owning railway. It is thus implied that the machines to be deployed on other railways should be in good condition, not needing any major repairs. User railway shall also be responsible for optimum utilization of machines and feeding the progress in TMS and reporting of progress. In case of deployment for longer durations, the user railway shall take over the machine and arrange required staff for operation & maintenance.

604 Line Blocks, Stipulated Corridors and Monitoring

(1) Stipulated block hours (SBH) are blocks machine has to avail every month for desired utilization. SBH for all machines shall be 100 hours per month except for TRT, TLE and PCCM. SBH for TRT and TLE will be 64 hours and that for PCCM is 36 hours per month. Non-availability of machines on account of planned maintenance operations of POH and IOH shall be considered in arriving at the figures of SBH.

(2) Demanded block hours (DBH) are minimum specified block hours to be demanded daily so as to achieve a minimum of SBH on an average in the year. As a general rule DBH shall be as follows:

All track machines except PCCM	4 x No. of days block demanded*
PCCM	3 x No. of days block demanded*

- *No. of days block demanded shall be actual No. of days block is demanded excluding the days lost due to rest, holiday, machine under repair /maintenance /overhauling, shifting, no planning etc.
- Actual Block hours (ABH) is the actual blocks granted in hours.
- DBH/SBH expressed in % gives the availability of track machine.
- ABH/DBH expressed in % gives the machine utilization.

605 Types of Blocks - As stipulated by the Railway Board, on-track machines should work under traffic blocks as per the following options depending upon the track maintenance requirement and traffic patterns:

(1) Regular Traffic Blocks

(a) **On Single Line Section -** Either one block of at least 4 hours or 2 blocks of 2-1/2 hours or in exceptional cases minimum two hours wherever 2-1/2 hours are not possible.

(b) On Double Line Section

(i) One spell of 4 hours on "Up" or ‘’Dn" line daily.

(ii) Two 2-1/2 hours split blocks on "Up" or "Dn" line on alternate days. (5 hours daily on one of the lines)

(2) Blocks on Construction Projects and Multiple Lines – On construction projects and multiple lines, additional working hours/blocks should be planned.

(3) Special Blocks – In addition to regular traffic blocks, special blocks as envisaged in Engineering and Operating JPOs issued by Railway Board from time to time should

be considered.

(a) **Mega Block Running into Several Days/Weeks -** Major maintenance/ rehabilitation of assets in identified block section in a double line traffic sections shall be carried out for pre-decided long block running into several days/weeks by blocking of one line and conversion of double line into single line with suitable modifications in signalling system to complete the entire work. This shall result into expeditious completion with better quality of work. Detailed scheme for each section to be undertaken for the temporary conversion based on requirement of work and local conditions shall be prepared by Zonal Railways as laid down in joint circular issued by Railway Board.

(b) **Mega Block of 6 Hours Duration or More**

(i) On single line/double line section – Mega blocks of minimum duration of 6 hours up to twice a week depending upon requirement of work shall be made available. Cancellation of few passenger trains may be resorted to, if required.

(ii) On multiple line section – On multiple line sections having more than two lines, pre-planned assured mega block of 6 hours shall be made available, particularly in context of incidences of track man being run over while moving to another track or otherwise during performance of duties.

606 Minimum Duration of Blocks - Minimum duration of blocks for effective working, ineffective time and ideal stipulated output per effective hour shall be as follows:

(1) Track machines are deployed for variety of track works and their proper utilization has to be ensured by making available minimum duration of blocks for smooth, safe and effective working. Minimum duration of block is fixed based on setting up/winding up time, ineffective time and progress per effective hour. Minimum block duration etc. for different types of machines is given in table below:

M/c Type	Minimum Block (hr.) (min)	Ineffective time (hr.) (min)	Output / eff. Hr.
DUO	2.50 (150 min)	0.50 (30 min)	800 m
CSM	2.50 (150 min)	0.50 (30 min)	1200 m
TEX	2.50 (150 min)	0.50 (30 min)	1600 m
UNIMAT	2.50* (150 min)	0.50 (30 min)	1 turnout
BCM(Plain)	3.00 (180 min)	1.00 (60 min)	200 m
BCM (P&C)	4.50 (270 min)	3.00 (180 min) #	One turnout =750 m track
SBCM	2:30 (150 min)	0.50 (30 min)	400 m
TLE	3.00 (180 min)	0.75 (45 min)	200 m
TRT	4.00 (240 min)	1.25 (75 min)	400 m
RGM	2.00 (120 min)	0.75 (45 min)	10 – 12** km

- *Time for turnout is for main line & turnout side and connection and disconnection time required for S&T
- **Depending on the length on curves in the section
- # For deep screening of P&C, ineffective time includes movement, preparatory works and S&T works
- Output may vary depending upon the age of the machine and track features
- For output less than 90% of the normal output, the reason should be analyzed and corrective action taken, if any
- MPT is used for spot attention of both plain track and Points and Crossing, hence requirement will vary depending on work to be performed.

(2) Group working can be adopted to reduce total block requirement if assured and longer duration blocks are granted.

(a) BCMs can be deployed in a group; in blocks of 4 hours and more as working time of the second machine reduces. This time loss for trailing machine is around 30 min. In addition, output is also compromised on regular basis due to conservative estimate of patches left between the two machine work locations. Thus, for group working of BCMs the ineffective time will have to be increased by 30 min for second machine and so on for third machine.

(b) Tamping machines can also be deployed in groups. More than one plain track tamper can also be combined with UNIMAT.

607 Measures for Ensuring Block - Principal Chief Engineer (PCE) and Chief Operating Manager (COM) of the railway shall ensure that the identified corridor blocks as above are incorporated in the working timetables and their availability shall be ensured.

Following are the measures for ensuring availability of blocks:

(a) Inclusion of engineering maintenance corridor blocks in the Working Time Tables and updating it every year duly providing alternate corridors for those affected by the newly introduced trains.

(b) Resorting to TSL (Temporary Single Line) working, rescheduling/regulation /cancellation of trains to ensure adequate blocks for track machines.

(c) Identifying double line sections for introduction of system of Single Line signalled working for days/weeks.

(d) **Periodic Monitoring –** Daily monitoring of blocks and performance at DRM's level in divisions and CTE at HQ and weekly review at PCE, COM and GM's level at headquarters is essential to monitor the utilization of track machine and blocks granted.

608 Through Tamping and Spot Attention

(1) **Types of Tamping –** Tamping has been categorised in two types: -

(a) **Through Tamping –** This is maintenance tamping as per pre decided programme drawn in beginning of year and covers long continuous stretches

of the track from one end of the block section to the other. Frequency of through tamping depends on the tamping cycle fixed by the railway based on factors as enumerated below with the approval of CTE.

(b) Spot Attention – Tamping of track of shorter stretches, say 200 m or longer, is sometimes necessitated due to various reasons such as bad running location, work spot etc. The annual programme shall have provision of Spot attention to be done with the approval of Sr.DEN/Co. The quantum of spot attention in terms of approximate length in kms, should be incorporated in the deployment programme issued by CE/TM.

(2) Tamping Frequency - The requirement and periodicity of through tamping depends on many factors, as mentioned below:

(i) Traffic density (GMT) on the route, Axle Loads and maximum permissible Speed of trains.

(ii) Track geometry i.e. gradients & curvature.

(iii) Track structures and condition of track components.

(iv) Depth of ballast cushion, availability of clean cushion below sleeper and on shoulders, and drainage characteristics.

(v) Type of formation i.e. embankment or cutting, type of soil, and condition and stability of the formation.

(vi) Climate condition such as rainfall, snowfall etc.

(vii) Local conditions, such as adjoining built-up area, tress passing, drainage problems etc.

(viii) Mode of tamping on previous occasion i.e. smoothening mode or design mode.

Tamping frequency has to be fixed with the purpose to achieve track with required geometrical parameters and sound condition of packing for the end result of having good riding comfort (quality). Considering the wide variations in aforesaid factors on different sections, it is not feasible to fix frequency of tamping universally and each Zonal Railway would fix the frequency with the approval of CTE.

As a general guideline, the frequency of tamping would be 1 year and above. Tamping of track having bad formation and other factors necessitating more frequent tamping should be called spot attention. TMS module should have the provision for feeding such spot attentions.

Frequency of tamping may be reviewed, as and when one or more of the above factors get modified.

CHAPTER 7

RULES FOR MOVEMENT AND BLOCK WORKING

701 General

(1) **Categorization of Track Machines -** For the purpose of movement and working, track machines are classified in two categories

(a) **Track Machines Hauled by Locomotive -** TLE, TRT, PCCM, MDU are the machines generally falling in this category. Rules for movement for material trains will apply to these categories of machines. Details of movement and working are elaborated in this chapter. Other track machines when attached with the train/locomotive will also fall in the same category.

(b) **Self-propelled Track Machines -** Rules for movement and working of self-propelled track machines are detailed in this chapter. This category of track machines may also work with the non-self-propelled track machine as in (a) above for effective block utilization, in the same block section.

(2) **Self-propelled Track Machines -** For movement, these shall be worked as a train but will not need a guard or a brake van. One camping coach or one BRN wagon or another self-propelled track machine, which may be un-braked, shall permitted to be hauled by the self-propelled track machine. SSE/JE/TM operating the machine shall ensure safe running.

(3) **Provision of G&SR -** Provisions as contained in GR 4.65 supplemented by SR framed by the Zonal Railways, shall be applicable for working of track machines. Presently, SRs of Zonal Railways are not uniform. Objective should be to have common or unified SR for all Zonal Railways for common aspects of track machines working. Specific provisions in respective SRs shall deal with special circumstances prevailing in individual Zonal Railways.

(4) **Knowledge of G&SR -** Track machine staff shall be conversant with the relevant provisions of G&SR. Adequate knowledge of provisions of G&SR shall be imparted during the initial and refresher training courses conducted in ZRTIs. The list of standard forms is given in **Annexure7.1**.

(5) **Manning of Track Machines and Possession of Safety Equipment -** All track machines shall be manned by a competent railway servant authorized to work the machine. These machines shall also be equipped with prescribed set of safety equipment to ensure safe movement and working.

(6) **Salient Information of Track Machine -** Following information shall be painted on the track machine at pre-decided locations:

(a) Designation of Controlling Officer (Dy.CE/TM/Line).

(b) Name of owning Railway.

(c) Track Machine No. with model.

(d) Transportation Code.

(e) Month and Year of commissioning.

(f) Date of last POH and last IOH done.

(g) Maximum permissible speed when self-propelled, coupled with other track machine and when attached with train formation as per speed certificate of RDSO sanctioned by Railway Board.

(h) Maximum height and width of track machine in closed condition.

(i) Axle load, wheel base and overall length of machine.

(j) Jacking point i.e. lift here.

702 Operation and Working of Track Machine

(1) **Responsibility of Track Machines -** For the purpose of operation, each machine shall be under the direct charge of SSE/JE/TM. He shall be in-charge of the track machine and shall be responsible for safe movement and working of track machine. All SSE/JE/TM posted on the machine shall have the knowledge of movement and working of track machines and shall possess valid competency certificates. Total number of persons including railway staff, allowed in the driving cab of each machine, shall not normally exceed five.

(2) **Supervision of Work of Track Machine(s) -** The track machine(s) shall work under the direct supervision of an engineering official, not below the rank of SSE/JE (P.Way), who will be responsible for taking the traffic block, coordinating for shunting in the yard, entry of machine(s) into the block section, protection of the line while the work is in progress and timely clearance of block and track machines from the section to the station, after the completion of the work, ensuring the safety of the track(s). He shall also be responsible for coordination with divisional officials for clearance of section in event of breakdown of machine. SSE/JE (P.Way) shall also associate himself and co-ordinate with station master for shunting of the track machine(s).

(3) **Working - General**

(a) The machine staff and P. Way staff shall work as a team towards the common goal of ensuring optimum utilization of the machine and manpower.

(b) The machine staff shall ensure adequate attention to the machine in time as prescribed in RDSO and manufacturer's manuals in respect of their machines and keep the machines ready for availing stipulated blocks. They should, in consultation with the P. way staff/Engineering Controller/Track Machine Control, be aware of corridor block/MOU provisions and line block spell and plan out their maintenance activities in such a manner that blocks are availed without any lapse. The machine

in-charge shall invariably inform SSE/JE (P.Way) and if not available, to SM or Engineering Control about readiness or otherwise of the machine for working every day well in time.

(c) The machine shall be berthed in the sidings safely as stipulated in the G&SR and the P.Way staff shall arrange for watchman for the machine during the non-working shift. The watchman for the machine should not be frequently changed.

(d) The machine in-charge on arrival shall check up the condition of the machine and report any unusual features observed by him such as disturbance to the machine at the berthing place, missing of parts etc. and initiate appropriate action as per extant rules.

(e) The machine in-charge and SSE/JE (P.Way) shall jointly inspect and finalize the week's work in advance and discuss the day's programme and share with each other all information required for the working.

(f) SSE/JE (P.Way) shall ensure availability of requisite men and tools & plant to work with the machine and for rendering possible assistance to clear the section in case of breakdowns.

(g) SSE/JE (P. Way) shall be responsible for arranging necessary lighting etc. for night works and also coordinate with other divisional staff such as Signal/OHE etc.

(h) It should be ensured by the machine in-charge that no person climbs to the top of any machine without OHE block in electrified sections.

(i) The machine in-charge shall ensure that all precautionary measures are taken for safety of the staff while working on double/multiple line block section against the danger of trains moving on adjacent lines. SSE/JE (P. Way) should provide lookout-men at the site of machine working as per requirements, including protection as per IRPWM and GR 6.03.

(j) SE/JE (P Way), after completion of work shall inspect the worksite attended by track machine thoroughly and ensure track fitness for running of trains with or without speed restriction, as appropriate. He shall ensure that no infringement, obstructions have been caused to safe train running during working of track machine.

(k) SM will liaison with Section Controller/Controller to ensure that at the end of work, the machine is brought to the base station and placed in the nominated berthing line at the earliest to enable post block maintenance of the machine being undertaken. SSE/JE (P.Way) shall also provide necessary assistance as required.

(l) Due to non-availability of path etc., it may not be possible to bring the machine back to the siding where camping coach of machine is stabled, in some of the busy sections. In such eventuality, Sr. DEN/DEN/AEN shall have the powers and provision to hire the road vehicle to bring the staff

back to machine stabling station.

703 Competencies of Track Machine Staff - SSE/JE/TM shall be competent to work the machine and he should possess adequate knowledge, which would be imparted during initial and refresher courses. Competent authority shall duly certify him for his competence. Each SSE/JE/TM shall have a diary as per proforma given in **Annexure 7.2** of this manual and the details of these competencies/fitness shall be recorded therein by SSE/TM/DI or SSE/TM/SDI, as per the system on Railway; in addition to other relevant information. Road learning will be recorded by LI or nominated supervisor.

(1) **Medical Fitness and PME -** SSE/JE/TM shall be fit in A-3 medical category. If wearing spectacles, he shall carry one extra pair while on duty. Technicians and helpers working on track Machines shall be fit in A-3 medical category. This shall be recorded in certificate of medical fitness at the time of joining and certificate of periodical medical examination (PME) during the course of service. The employee will inform his immediate superior 60 days in advance of expiry of his medical certificate. Employee will be expeditiously booked for PME.

(2) **Technical Training -** All SSE/JE/TMs are to undergo initial as well as refresher technical training imparted by IRTMTC, Allahabad; successfully. Refresher technical training shall be done every 3 years. Certificate of satisfactory completion of training should be kept in the personal custody of the official and produced when required.

(3) **G & SR Training -** All SSE/JE/TMs are to undergo initial as well as refresher training in G&SR; successfully. Refresher G & SR training shall be done every 3 years. Certificate of satisfactory completion of training should be kept in the personal custody of the official and produced when required.

(4) **Route/Road Learning -** It will be the responsibility of the SSE/JE/TM working the machine to acquaint himself with the system of working, location of signals and other local conditions affecting running of trains on a section(s) of the railway over which he is to work and if he is not so acquainted with any portion of the railway over which he is to work, obtain the services of qualified railway servant who is conversant with it to assist him by requesting the office of Dy.CE/TM Line.

SSE/JE/TM will make trips in the cab of locomotive of a train for initial road learning for acquainting with the section as well as subsequent, if required, for reacquainting with the section as stipulated in G&SR of the railway. Entry to this effect shall be made in the diary by the employee and countersigned by LI or SSE/TM/SDI of concerned satellite depot. For this purpose, posting of at least one LI in each division, depending on the number of machines i.e. number of SSE/JE/TM, shall be ensured.

(5) **Competency Certificate -** SSE/JE/TM shall be considered competent to operate the machine only if he possesses valid machine competency

certificate. Machine competency certificate is to be issued to SSE/JE/TM by Dy.CE/TM Line or an officer authorized by him. This certificate will be issued as per proforma given in **Annexure 7.3** after ascertaining the successful completion of technical training, G & SR training and his medical fitness. The validity of this certificate will be up to the earliest expiry date of the three i.e. (i) Technical training (ii) G & SR training and (iii) PME.

For automatic block section, separate competency is required to be issued as per the practice in the Zonal Railway.

704 Safety Equipment

(1) **General** - SSE/JE/TM in-charge shall be responsible to ensure that the following equipment in working condition are available on the track machine:

(a) Two red and one green hand signal flags.

(b) Two tri-colour hand signal lamps /LED torch.

(c) Two chains with padlocks.

(d) One fire extinguisher in each cabin.

(e) Two hooters (manually controlled).

(f) Two jacks10 t.

(g) Four wooden blocks.

(h) Four crow bars.

(i) One hydraulic hand pump.

(j) Emergency pneumatic/hydraulic hose off sizes suiting to different machines (Complete with end fitting).

(k) Wire rope with close loops at both ends 2 m and 9 m long for BCM: One of each length.

(l) Machine specific equipment, if any, listed in Chapter 2, 3, 4 and 5.

(m) Ten fog signals (detonators) in a tin case.

(n) A copy of the working timetable of the section where the machine is working.

(o) G & SR book with up to date amendment slips.

(p) One 4 cell flasher light LED lamp cum flasher light (rechargeable).

(q) Two banner flags.

(r) One first aid box.

(s) Two skids.

(t) Safety helmets for all machine staff.

(u) Protective clothing, safety shoes and safety gloves.

(v) Walkie talkie with frequency of SM, Guard and Loco Pilots.

(w) Internal communication system like walkie-talkie and/or head mounted system.

(x) Track Machine Manual with up to date correction slips.

(y) Accident Manual.

(z) Tail lamp.

(2) **Head and Tail Lights –** Each track machine must be equipped with prescribed head and tail lights, marker lights and flasher lights as per GR 4.14, 4.15 & 4.16 and SRs thereof. Each machine shall display LV board/tail lamp when moving alone. While moving in conveyor coupled, the LV board/tail lamp shall be fixed on the last vehicle; in the direction of movement.

705 Rules for Operation – General

(1) **Stabling of Track Machines -** When the track machine(s) is/are stabled at a station, SSE/JE/TM in-charge shall ensure that it is clear of fouling marks and traps and necessary precautions against rolling down such as pinning down hand brakes, chaining and provision of skids; is taken in accordance with G&SR.

(2) **Shunting of Track Machines -** No track machine shall be moved between a running line and the siding/stabling line without the written permission of the Station Master on duty in the form of shunting order/shunt signals.

(3) **Machine Ready Memo -** SSE/JE/TM shall issue a written machine ready memo (as per Annexure 7.4) after necessary maintenance/repairs/schedules and Brake Power testing and other stipulated checks, if any, to on duty SM, indicating time and date, under advice to SSE/JE/P.Way deputed to work with the machine.

(4) **Movement of Track Machines -** When the track machine is required to move from one station to another station, SSE/JE/TM shall run the machine only with proper authority to proceed and all necessary permits, notices and cautions as specified in G&SR. When track machine is to move on wrong road (against the direction of traffic), the speed of track machine shall not exceed more than 25 kmph and flasher light shall be kept "ON".

(5) **Working in Group**

(a) When more than one machine is required to work within the same block section, these machines may be allowed to move into the block section in a group under one authority as detailed in this chapter. In such situation all the track machines must leave and enter the section simultaneously one after another keeping adequate distance among them and with proper authority as detailed further in the following paras.

(b) Total number of the machines shall be clearly mentioned in the line clear/block authority message with exchange of private numbers. For

this purpose, two coupled self-propelled track machines are to be treated as single machine. Track machine with one BFR, like UTV, shall also be treated as a single machine.

(c) In case of group machines, entering into the block section for working, and back and entering the station after working, the first machine shall pass the dispatch/reception/last stop signal, as the case may be, in OFF position (where signal is given) and all other machines shall be piloted by competent railway servant following first machine with signal in ON position. In case where the machines are allowed on paper authority instead of signals, SSE/JE/P.Way or SSE/JE/TM in the first machine will receive the authority and other machines will follow duly piloted by competent railway servant.

(d) Normally machines shall not work in a group while visibility of track is restricted due to sharp curves and steep gradients. Where the working of track machines in group is indispensable i.e. like deep screening, track relaying site etc., the necessary block protection shall be done as per para 806 of IRPWM and special precaution shall be taken as per para 811 of IRPWM for the first machine facing the direction of traffic in double line section and for the front and rear most machines in single line section.

(6) **Run through movement in Group -** Run through movement of the track machines in-group is not allowed. They can however transit as coupled vehicle under one authority. However, the machines can move in group by taking a short duration block and rules as for group movement for block shall be followed.

(7) Working of Track Machine in Block

(a) The track machine(s) shall work under line block only. The SSE/JE (P. Way) shall give the requisition for block in duplicate to Station Master on duty, as per proforma in **Annexure 7.5,** indicating therein specific location where the machine(s) will work, the road i.e. UP/DN etc., the number of track machine(s) that will work along with individual number(s) and sequence (order in which machines will leave the station), the duration of block required and whether the machine(s) will proceed to the next station or return back to the starting station after the work. The SM shall then contact the control and ascertain the movement of trains before granting line block.

(b) After the block is granted, the Station Master will return the original copy of requisition endorsing the duration and other special instructions like work and proceed, work and return via right or wrong direction, caution order, if any SSE/JE (P. Way) shall accompany the machine(s) to the work site.

(c) SSE/JE (P.Way), shall get the requisition so returned by station master

(also called as track machine permit), signed from the SSE/JE/TM in-charges of track machines.

(d) On reaching the station as mentioned in track machine permit, after the completion of work, SSE/JE (P.Way) will hand over the token, track machine permit and the key etc. if any, after all the machine have cleared the block section. He will also certify that the track is fit for train movement. Then only the Station Master will clear the line for normal train operation subject to the observations of speed restriction, if any.

(8) **Working in Automatic Block Sections** – Automatic signalling territory involves special features in working and the special instructions for working of track machine are elaborated in **Annexure 7.6**

(9) **Working in Integrated Traffic Blocks -** If the track machines are working in an integrated traffic block where other machines and staff engaged by other departments are also working, the relevant instructions issued by Zonal Railway for integrated block working should be followed.

(10) **Use of Cell Phone on Track Machine -** All supervisory staff in the track machine and as well as at the track machine site is prohibited from use of mobile phones during movement and working of track machine, except in emergencies or when it is extremely necessary.

(11) **Requirement of Pilot -** If the SSE/JE/TM is not acquainted with the section, where the track machine has to work, a Pilot (Loco Pilot/ALP) shall be provided for movement as well as block working as per the specific request in advance. SSE/JE (P.Way) may also work as pilot in his jurisdiction, in case of emergent situations.

(12) **SSE/JE(P.way) as Guard -** In emergent and special situations, SSE/JE/P.Way shall work as the guard. SSE/JE/P.Way shall perform the limited functions of a guard required for working and movement of UTV, which has only one SSE/JE; as it has one BFR and direct visibility of points from the driving cabin may not be there in one direction.

706 Working Of Track Machines In Single and Double Line Sections

(1) **Single Line Section – Work and Proceed**

(a) Station Master will obtain line clear from station in advance, take off last stop signal, issue track machine permit and handover the token, if any, to SSE/JE (P.Way), SSE/JE (P.Way) shall travel in the last track machine.

(b) On completion of the work, the machine(s) will be received by taking off reception signals. Competent railway servant should display green hand signal at the foot of first stop signal till the last machine enters the station.

(c) Station Master will clear the line for normal train operation only after SSE/JE (P.Way) has returned the track machine permit etc. and certified

the track fit for train movement.

(2) Single Line Section – Work and Return

(a) With token / tablet instruments

(i) Station Master will obtain line clear from station in advance; take off last stop signal, issue track machine permit along with token/tablet to SSE/JE (P.Way). SSE/JE (P. Way) shall travel in the first track machine.

(ii) On completion of the work, the machine(s) will be received by taking off reception signals. Competent railway servant shall display green flag/signals at the foot of first stop signal till the last machine enters the station.

(iii) Station Master will clear the line for normal train operation only after SSE/JE (P.Way) has returned the track machine permit etc. and certified the track fit for train movement.

(b) With token less Block Instrument

(i) Station Master will block back the section, take out the shunting key, issue track machine permit, and shunting key to SSE/JE (P.Way) In addition requisite written authority will be issued for passing the last stop signal at danger for all machines SSE/JE (P.Way) shall travel in the first track machine.

(ii) On completion of the work, the machine(s) will be received by taking off reception signals. Competent railway servant shall display green hand signals at the foot of first stop signal till the last machine enters the station.

(iii) Station Master will clear the line for normal train operation only after SSE/JE (P.Way) has returned the track machine permit etc. and certified the track fit for train movement.

(3) Double Line Section – Work and Proceed

(a) Via Right Direction

(i) Station Master will obtain line clear from station in advance, take off last stop signal, issue track machine permit SSE/JE (P.Way) shall travel on the last track machine.

(ii) On completion of the work, the machines will be received by taking off reception signals; competent railway servant shall display green flag/signals at the foot of first stop signal till the last machine enters the station.

(iii) Station Master will clear the line for normal train operation only after SSE/JE (P.Way) has returned the track machine permit etc. and certified the track fit for train movement.

(b) Via Wrong Station**Direction**

(i) Master will take the line clear from station in rear on block telephone, prepare paper line clear ticket, issue track machine permit, to SSE/JE (P.Way), SSE/JE (P. Way) shall travel on the last machine.

(ii) The machine(s) shall be piloted out of the station on a written authority issued by the Station Master after all the facing points have been correctly set and locked and trailing points correctly set over which the machine(s) will pass.

(iii) On approaching the next station after completion of the work, SSE/JE/TM shall bring their machines to stop opposite the first stop signal pertaining to the right line or at the last stop signal pertaining to the wrong line (on which they are running) whichever they come across first and wait and proceed as piloted or follow GR 4.44.

(iv) The Station Master at the other end of the block section shall depute a railway staff in uniform at the foot of the signal (whichever the machines would encounter first) who shall stop the machines on danger hand signal and thereafter pilot them into the station on a written authority issued by the Station Master.

(v) If the operators find that no railway servant in uniform has been deputed at the foot of the signal to pilot the machine(s) into the station, GR 4.44 shall be observed.

(vi) All the crossover points in the facing direction, over which the machines shall proceed, shall be clamped and pad locked. This fact will be mentioned in the authority in prescribed form issued by station master, through the competent railway servant.

(vii) Station Master will clear the line for normal train operation only after SSE/JE (P.Way) has returned the paper line clear ticket, track machine permit etc. and certified the track fit for train movement.

(4) Double Line Section - Work and Return

(a) Via Right Direction

(i) Station Master will block forward the section and arrange to put the needle of the block instrument directly to "Train on Line", take out the shunting key in case of 'Daido' Double Line Block Instrument, issue track machine permit along with the shunting key, if any, to SSE/JE (P.Way). In addition, requisite written authority will be issued for passing the last stop signal at danger. SSE/JE (P. Way) shall travel in the first track machine.

(ii) On completion of the work, SSE/JE/TM shall bring their machine to stop opposite first stop signal pertaining to the right line or at the

last stop signal pertaining to the wrong line, whichever they comes across first.

(iii) Station Master shall depute a railway servant in uniform at the foot of the signal (whichever the machine would encounter first) who shall stop the machine(s) on danger signals and thereafter pilot them into the station on a written authority issued by the Station Master.

(iv) If SSE/JE/TM find that no railway servant has been deputed to pilot the machine(s), GR 4.44 shall be observed.

(v) All the crossover points in the facing direction over which the machines shall proceed, shall be clamped and pad locked.

(vi) Station Master will clear the line for normal train operation only after SSE/JE/P.Way has returned the track machine permit etc. and certified the track fit for train movement.

(b) Via Wrong Direction

(i) Station Master will block back the section as per extant instructions, put the needle of the block instrument directly to "Train on Line" take out the shunting key in case of 'Daido' Double Line Block Instrument issue track machine permit special caution order indicating the number of track machine(s), station where they will return etc. which will be signed by the operators and then will be handed over along with the shunting key, if any to SSE/JE (P.Way). SSE/JE (P.Way) shall travel in the first track machine.

(ii) The machines shall be piloted out of the station on a written authority issued by the Station Master after all the facing points have been correctly set and locked and trailing points correctly set over which the machines will pass.

(iii) On completion of the work the machines will be received by lowering reception signals. Competent railway servant shall display green flag/hand signal at the foot of first stop signal till the last machine enters the station.

(iv) Station Master will clear the line for normal train operation only after SSE/JE (P.Way) has returned the track machine permit etc. and certified the track fit for train movement.

707 Important Instructions and Precautions

(1) Protection of Work Site - SSE/JE (P.Way) shall be responsible for protection of the site of work and also protection of adjoining track(s) in case of infringement. He shall be conversant with the infringing conditions of the various machines. He shall also be responsible for safe condition of track before clearing the block after machine working.

(2) **Fouling of Adjacent Lines -** Some machines like BRM, PCCM etc. tend to foul the adjacent line, while working on double line section or in yard. If any part of a machine is likely to foul the adjacent line(s) while working, SSE/JE (P.Way) shall request Station Master in writing to block such line(s) likely to infringe. Such work shall only be undertaken if blocking of such adjoining line(s) has been permitted by the control and the Station Master and such adjoining lines have been protected. Efforts shall be made to ensure the blocking of other lines for minimum duration.

(3) **Information to Level Crossings -** While exchanging private numbers with level crossings, the Station Master on either side shall inform all the level crossings equipped with telephones falling in the block section.

(4) **Safe Distance and Speed of Machine in Group -** The minimum distance between the machines when working in a group shall be 50 m to avoid collision between machines and danger to life of machine and P.Way staff working with machine. While the track machines are moving in the block section in group, it will be the responsibility of SSE/JE/TM of these machines to maintain a minimum safe distance of 200 m from each other. The speed of movement of track machines shall be the lowest of the permissible speed among all track machines. The leading track machine shall observe this speed. If any of the machines is required to slowdown or stop due to some reason, SSE/JE/TM driving the machine should ensure that red hand signal is displayed by waving vigorously. Where visibility is poor such as on curves and in cuttings, appropriate speeds and safe distance should be maintained to ensure safety. While approaching the level crossings, SSE/JE/TM driving the track machines shall keep a vigil for any obstruction and whistle freely till the machine passes the level crossing.

(5) **Setting of Points of Stabling Siding -** The concerned points of non-signalled sidings shall be set against the line on which the track machine is stabled and such points shall be secured with clamps or cotter bolts and pad locks as stipulated in G&SR. The keys of such padlocks shall be kept in the personal custody of Station Master until the machine is ready to leave from siding or running line. SSE/JE/TM in-charge shall not relinquish charge until he has satisfied himself that the machine has been properly secured and protected as prescribed herein.

(6) **Shunting in Line occupied by Track Machine -** During shunting on a line occupied by track machines, station master shall ensure that no machine is shunted without the presence of SSE/JE/TM.

(7) **Safety of Men**

(a) Working of certain track machines creates conditions jeopardizing safety of man and material, if adequate precautions are not enforced at site of work. BCM is likely to produce a dusty atmosphere impairing visibility in the vicinity of machine and also heavy noise. TLE and TRT

involve large number of labour working with the machine. Hence, extra care is necessary as detailed below, to ensure safety of workers.

(b) Hooters should be provided on the track machines. These hooters should be used to warn the staff working on/around the track machine about approaching train on adjoining track. Remote controlled hooters shall also be deployed as an added precaution by SSE/JE/P.Way so that lookout man standing around 150 m away from the track machine can also operate the hooter to warn the staff suitably. SSE/JE/TM shall also put on the flasher light on as an added precaution till the train on adjacent line has passed the site of work.

(c) Caution order of 30 to 50 kmph with instructions to whistle freely should be imposed on the adjacent line, during the duration of block, for the safety of workmen, depending upon the site conditions and visibility.

(8) **Checking Infringement After Work -** The vertical and lateral clearance for OHE, signal post and any other structure should be checked and adjusted before clearing the block. It shall be ensured by SSE/JE (P.Way) working with track machine that there should be no infringement to signal post, OHE and any other structure as per schedule of dimensions.

708 Failure and Accidents of Track Machines

(1) **Protection in case of Breakdown -** In the event of breakdown, the track machines shall be protected as per GR 6.03 and SR there to by the machine staff, as directed by machine in-charge.

(2) **Failures in Block Section -** Failures in block sections of the track machines will be treated as accident under class 'J – Equipment failure'.

(3) **Accidents involving Track Machine -** Accidents involving track machines shall be treated as train accidents under the appropriate class and action shall be taken as per the rules in force.

(4) **Action in case of Failure in Block -** In case of failure of track machine in block section, immediate information with details should be conveyed to the ADEN/DEN/Sr.DEN of the section and the AXEN/XEN/Dy.CE/Line/TM. SE/JE/TM should decide in consultation with SSE/JE (P. Way), the action to be taken to clear the section. They may decide to push the disabled unit to the nearest station provided the brake power is in good condition. Otherwise, intimation shall be sent to the nearest Station Master asking for a light engine to tow the unit.

(5) **Request for ART/Breakdown -** In case, SSE/JE (P. Way) and/or SSE/JE/TM feels clearance of section is going to take long time, the assistance of Road Break-down or Accident Relief Train shall be asked for immediately. Meanwhile SSE/JE/TM in-charge on the machine shall take necessary action to rectify the defect(s). SSE/JE (P. Way) shall provide all necessary assistance.

709 Permissible Speed - Each machine will run within the maximum permissible speed sanctioned for that type of machine on a given section of the Railway.

710 Speed Certification for Track Machines - Railway Board Policy Circular No. 6 governs procedure for certification of permissible speed for new rolling stock. The provisions of the circular relevant to track machines are summarized below:

(1) Speed Certification for New type of Track Machine for Regular Movement

Any new type and model of track machine introduced on Indian Railway is allowed to run on Zonal Railways at a speed specified in the provisional speed certificate issued by RDSO. This can be done only after the approval of Railway Board processed through Chief Commissioner of Railway safety on the application processed by the RDSO (Gazette notification no.945(E)).

Final speed certificate for the track machine is also issued by RDSO, after conducting detail oscillation trials. For conducting trial, on the advice of RDSO to test track machine, General Manager of the concerned railway shall allow conducting the trials on their system on the test section identified by RDSO, after obtaining permission from CRS in case trial is to be done on passenger running lines with Joint Safety Certificate duly signed by the Principal Chief Engineer, Principal Chief Mechanical Engineer, Principal Chief Operating Manager and Principal Chief Signal & Telecommunication Engineer (Principal Chief Electrical Engineer also in case of locomotive or involvement of electrified section).

GM sanction for such trials shall be valid for two years, after which it shall require revalidation by the General Manager on the advice of RDSO. With regard to a stock already operating on provisional speed certificate, while revalidating the permission for oscillation trial, any adverse performance or special observations made during service, if any, shall be commented upon.

Sanction of Railway Board for final maximum permissible speed through Chief Commissioner of Railway safety (CCRS) is also required to be obtained in a similar manner as above. The procedure to be followed is detailed below:

(a) Determination of Provisional Maximum Permissible Speed/ Final Maximum Permissible Speed by RDSO

(i) **Provisional maximum permissible speed**

- The provisional maximum permissible speed for new type of track machine shall be determined on the basis of design features and other details supplied by the OEM. Guidance can also be taken from the permissible speed of similar type of machine already in service.
- The provisional speed will normally be lower than the design or projected maximum permissible speed but shall not be more than 65 kmph. However, for track machines, whose suspension and other relevant characteristics such as axle

load, track loading density etc. are similar to stock already in service, maximum permissible speed may be increased to 75 kmph by Executive Director Standards (Motive Power)/RDSO in consultation with Executive Director Standards (Track) and Executive Director (Bridges & Structure) and other concerned Directorates.

- The provisional speed certificate will be valid for five years except when it is superseded by final maximum permissible speed certificate issued following the procedures described below:

(ii) **Final maximum permissible speed**

- The final maximum permissible speed shall be determined on the basis of detailed oscillation trials for assessing the riding quality and/or stability. However, for such stock whose suspension and other relevant characteristics such as axle load, track loading density etc. are not basically different from those of the existing ones, the detailed oscillation trial may be dispensed by Executive Director Standards (Motive Power)/RDSO in consultation with Executive Director Standards (Track) and Executive Director (Bridges & Structure) and other concerned Directorates. In case of difference of opinion, the matter shall be referred to the Railway Board for final order.
- For conducting oscillation trials, a separate provisional speed certificate for oscillation trials, shall be issued by RDSO specifying the section where trial is to be conducted.
- General Manager of the concerned railway shall allow conducting the trials on their system on the test section identified by RDSO, after obtaining permission from CRS in case trial is to be done on passenger running lines with Joint Safety Certificate duly signed by the Principal Chief Engineer, Principal Chief Mechanical Engineer, Principal Chief Operating Manager and Principal Chief Signal & Telecommunication Engineer (Principal Chief Electrical Engineer also in case of locomotive or involvement of electrified section).
- Oscillation trial is conducted under the supervision of by RDSO.
- Final maximum permissible speed certificate shall be issued by RDSO based on the results of detail oscillation trial conducted.

(b) Application for Sanction by RDSO for introduction of Machine

1) The RDSO shall apply, for introduction of machine different from those already running on any section or division of zonal railway for use by any zonal railway to the Railway Board through the Chief Commissioner of Railway safety (CCRS).

   Any increase in sanctioned maximum speed of machine shall be treated as introduction of new types of locomotives or rolling stock.

2) The application shall be accompanied by-

   a) such diagrams as may be necessary to give full particulars of the axle loads, wheel spacing, length over buffers and other principal dimensions of the machine for which sanction is required.

   b) provisional speed certificate or final speed certificate, as the case may be, issued by the RDSO.

3) The application shall be scrutinized by the Commissioner and his recommendations thereon shall be submitted to the Railway Board for its orders.

4) A machine have different principal dimension or a different bogie design or new designs of braking system or suspension details like axle load, track loading density, unsprung mass being different shall be regarded as new machine.

   Provided that any minor change of equipment design or change of internal equipment layout on the machine or minor change of axle load or minor change of track loading density or minor change in unsprung mass shall not be regarded as new machine, unless such changes are likely to significantly affect weight distribution, centre of gravity or riding behaviour of the machine.

5) In case of any difference of opinion in the RDSO, whether or not any change or modification is to be regarded as a new rolling stock, the RDSO shall, through the Commissioner, refer the matter to the Railway Board for final decision thereon.

(c) Railway Board's Sanction for introduction of Machine – Railway Board grants sanction for provisional introduction of machine at Provisional/Final speed on the basis of recommendation of Chief Commissioner of Railway Safety.

(2) Use of Machine by Zonal Railways

(1) The General Manager of Zonal Railway may sanction the use of machine already introduced on Indian Railway by the Railway Board on any section or division of railway under his control.

(2) The proposal for sanction of the General Manager of a Zonal Railway accompanied by-

(i) Such diagrams as may be necessary to give full particulars of the axle loads, wheel spacing, length over buffers and other principal dimensions of the rolling stock for which sanction is required.

(ii) the provisional speed certificate or final speed certificate, as the case may be, issued by the RDSO.

(iii) the sanction of the Railway Board for introduction of the machine or increase in sanctioned maximum speed of machine.

(iv) the calculations and stress sheets showing-

a) the conclusions arrived at.

b) the external forces on which the stress calculations are based.

c) the stresses which will be produced in the various bridges over which the proposed rolling stock will run.

d) the effects which the said rolling stock will have on various structures or tracks as compared with those caused by the machine already in use, or allowed by the existing orders.

Provided that the calculations and stress sheets under this clause must show as to what allowance has been made for any secondary or deformation stresses in addition to the primary stresses caused by external forces and what relief of stress, if any, has been included.

(v) the cost of modification to signalling and telecommunication installations necessitated by the use, if any, of chopper or thyristor control systems.

(vi) an approximate estimate of the cost of such improvements in existing structures or track as the use of the proposed rolling stock is likely to render necessary on the concerned railway, whether immediately or in the near future.

(vii) a certificate signed by the Chief Engineer, the Chief Mechanical Engineer and the Chief Electrical Engineer (for electric stock) of the concerned railway in the following proforma, namely-

CERTIFICATE

Certified that it is safe to run---------- (particulars of locomotive or rolling stock proposed to run)not exceeding---------- units(in the case of locomotive) coupled together on the section--------- (station) to ---------(station) from ----------(km) to ---------- (km) of the ---------- Railway at a maximum speed of ---------- (km/h) against a maximum speed of ---------- (km/h) certified by Research Design and Standards Organization, subject to the following speed restrictions and conditions;-

(a) Speed restrictions: -

Sl. No.	From Km to Km	Nature of speed restriction	Brief Reason for restriction

(b) Special Conditions-

1)……

2) ……

3) ……

4) ……

To be signed by-

1. The Chief Mechanical Engineer……. 2. The Chief Engineer…….

3. The Chief Electrical Engineer……. 4. The Chief Operation Manager…….

5. The Chief Signalling and Telecommunications Engineer…….

---

(3) The certificate referred to shall indicate-

(a) Clearly that the speed certified does not exceed the limits laid down by the Research Designs and Standard Organization; and

(4) The General Manager of the zonal railway shall communicate the sanction to the Commissioner for his information ten days in advance of the actual use of machine over the railway.

(3) One Time Movement of New Machine

a) The maximum permissible speed for the limited purpose of movement of machine from the manufacturer's works/docks to destination or to the

testing point or from the destination/testing point back to manufacturer's works shall be determined and certified by Executive Director Standards (Motive Power) in consultation with Executive Director Standards (Track) and Executive Director(Bridges & Structures) and other concerned Directorates. The speed for this purpose shall not be higher than the provisional speed determined by RDSO.

b) The maximum permissible speed prescribed by the RDSO shall be subject to approval by the Principal Chief Engineer and Principal Chief Mechanical Engineer (Principal Chief Electrical Engineer also in case of locomotive or involvement of electrified section) of the concerned Zonal Railways in the form of JSC, who shall ensure that the track, bridges and OHE in the sections concerned are suitable for the new stock at the speed permitted. However, if a new machine infringes the Indian Railway Schedule of Dimensions or axle loads are more than that permitted on the section; JSC duly signed by Principal Chief Engineer, Principal Chief Signal & Telecom Engineer and Principal Chief Mechanical Engineer (Principal Chief Electrical Engineer also in case of locomotive or involvement of electrified section) of the concerned Zonal Railways, should deal these issues and prior approval of GM shall be taken.

c) In such cases, Commissioner of Railway Safety shall be kept informed for the movement, but, no formal approval of the Commissioner of Railway Safety is essential. However, in case it becomes necessary to move the vehicle attached to a passenger carrying train, sanction of the Commissioner of Railway Safety shall be taken.

d) For each single movement of any machine not covered above, joint safety certificate shall be signed by Principal Chief Engineer, Principal Chief Mechanical Engineer, Principal Chief Operating Manager and Principal Chief Signal & Telecommunication Engineer (Principal Chief Electrical Engineer also in case of locomotive or involvement of electrified section) and submitted to CRS for his permission. CRS while permitting such movement may impose any special stipulations as deemed necessary for such movement.

711 Infringements - The Railway Board is the final safety controlling authority for the Indian Railways and it is the final authority for regulating and sanctioning speeds of all rolling stocks under the Indian Railways Act. For permitting any vehicle on Indian Railways, if any of the dimensions of machines is infringing the Indian Railway Schedule of Dimension, it shall have to be first condoned by Railway Board. The application for such condonation shall be initiated by RDSO through Chief Commissioner of Railway Safety.

Details of such condonations for older machines condoned under **Schedule of Dimension– 1939** and new machines infringing **Schedule of Dimensions –2004** are given in **Annexure -7.7**, machine-wise

712 Special Precautions while working in Special Circumstances

(1) Working of Machines in Ghat Section - The following precautions are essential for safe driving of the machine in sections involving steep gradients, sharp curves, deep cuttings high embankments etc.

(a) Ghat Section – means " A part of block section between any station of Indian Railway route which consists of 70 % in length or more that goes through hilly areas with significant continuous gradients i.e. 1 in 100 or steeper shall be called as Ghat section".

(b) SSE/JE/TM shall have Block Competency Certificate for ghat section working or a pilot driver having knowledge of ghat section where track machine(s) has to work, shall be deputed on track machine(s).

(c) Before offering readiness, brake power, hand brake & emergency brake shall be tested.

(d) SSE/JE/TM shall not leave driving/working cabin of track machine in ghat section.

(e) Wheel skids shall be kept ready.

(f) While going in steep down gradient, a loco shall be attached/coupled in front/leading direction of track machine and loco shall control all movements.

(g) While going in steep up gradient, a loco shall be attached/ coupled in rear/trailing direction of track machine direction and loco shall control all movements.

(h) For working purpose, track machine will be uncoupled & loco shall move along 25 meters away from the track machine. After completion of work, track machine shall be coupled with banking locomotive/banker.

(i) SSE/JE/P.Way shall be responsible to arrange a banking locomotive/banker before readiness of track machine.

(j) Drive only from the cabin corresponding to the direction of travel (except during small shunting movements where movement in opposite direction could be done with adequate precautions).

(k) Do not drive the machine at speeds exceeding the prescribed speed for the section, this speed being further reduced over switches and speed restriction zones.

(l) Never drive over slopes or descending gradients without putting into gear and do not switch off gear box key switch.

(m) Do not let the RPM of the engine fall below 1000 and do not switch off the engine before the machine stops in gradient sections.

(n) Shift back to lower gears well in time in case of ascending/descending

gradients.

(o) Have a special check for the ZF gear box oil level and its working temperature.

(p) Ensure proper working of pneumatic circuit and functioning of all components in the brake system.

(q) Ensure availability of spares particularly in respect of items that are failure prone such as transmission gear like cardan shafts, coupling bolts etc. Availability of a skid is a must.

(r) Also ensure proper working of horns and lights.

(s) Be on the lookout for trespassers while negotiating sharp curves and also sound horns on such occasions.

(t) No run through movement shall be done in convoy while moving in ghat section. Only one machine shall be allowed to move for run through movement in ghat section at a time.

(2) **Night Working -** For machine working in the night suitable lighting arrangements shall be done by SSE/JE/P.Way. Arrangements to take care of movement of lights with machine with progress of work should also be done.

Annexure 7.1

List of standard forms

S.No	Description	Form No	Font Colour /Remarks
1	Starting permit	T 310	Blue/Black
2	Advance authority to pass defective signal	T/ 369 – (1)	Blue
3	Authority to pass signals in 'ON' or defective position	T/369 – (3b)	Blue
4	Authority to pass shunt signal/gate signal at 'ON' and shunting permitted indicator	T. 370	Blue/Black
5	Caution order	T/409	Green
6	'Nil' caution order	T/A 409	Green
7	Reminder caution order	T/B 409	Green
8	Authority to receive train on obstructed line	T/509	Blue
9	Authority to receive train on a non-signaled line	T/510	Manuscript
10	Authority to start a train from non-signaled line	T/511	Blue
11	Authority to start a train from a line with common starter signal	T/512	Blue
12	Authority to proceed for relief engine/train to occupied Block section	T/A602	Red
13	Authority for opening communication during total interruption of communication on single line section	T/B 602	Red
14	Authority for working of trains during total interruption of communication on double line section	T/C 602	Red
15	Authority for temporary single line working on double line section	T/D 602	Red
16	Conditional line clear ticket up	T/G 602	Red

17	Conditional line clear ticket down	T/H 602	Red
18	Shunting order	T/806	Blue
19	Authority to pass automatic/semi automatic/manually operated/gate signals	T/A 912	Blue
20	Authority to proceed without line clear on automatic block signaling territory	T/B 912	Red
21	Authority to proceed relief engine/train into automatic occupied block section	T/C 912	Red
22	Authority to pass automatic block system during prolonged failure of signals	T/D 912	Blue
23	Authority to proceed without Line clear (UP)	T.1408/UP	Blue/Black
24	Authority to proceed without Line clear Down	T.1408/DN	Blue/Black
25	Paper Line clear ticket UP	T/C 1425	Blue
26	Paper line clear ticket DN	T/D 1425	Blue

Annexure 7.2

Personal Diary

Name_____ Designation _____

This book will be in possession of SSE/JE/TM whose photograph is affixed above. He shall produce the same on demand by any inspecting official.

XEN/AXEN/TMC/……

INDEX(1 page desirable)

S.No.	Description(PLEASE CORRECT INDEX)	Page No.
I.	Self Particulars	01
II.	Particulars of Transfers/Promotions	
III.	Particulars of experience on different types of machines	
IV.	Details of Awards/ Achievement's during service period.	
V.	Particulars of IRTMTC Training(Initial/Refresher)	
VI.	Particulars of IRTMTC Training(Special courses)	
VII.	Particular of ZTC Training	
VIII.	Particulars of PME	
IX.	Particulars of Machine Competency	
X.	Particulars of LRD	
XI.	Observation /Remarks of Inspecting officials	
XII.	Observation /Remarks of Inspecting Supervisor	

I. Self Particulars*(1 page desirable)*

S.No	Item Description	Details
1	Name	
2	Father's Name	
3	Date of Birth	
4	Designation and HQ station	
5	Educational qualification	
6	Scale and basic pay	
7	Phone and Mobile No.	
8	Date of appointment to Railway	
9	Date of appointment/Promotion to JE/SSE/TM	
10	Date of Appointment/Promotion to SSE/TM	
11	Unique ID/PF Account No.	
12	Pan No.	
13	Aadhaar Card No.	
14	Bill Unit No	
15	Address	
16	Phone No	
17	Academic Qualification	
18	Blood Group	
19	Date of attaining 45 years of age	
20	Date of attaining 55 years	

II. Particulars of Transfer/Promotion*(1 page desirable)*

SN	Name of the supervisory post	Date of Transfer*/ Promotion	Remarks
1	JE/……		
2	SSE/…….		

***Date of transfer means the date of joining the new post**

III. Particulars of experience on different types of machine (2 pages desirable)

Year@	Machine Type#	Period worked* (months)	Remarks
2016-17			

@ Period taken for filling the details shall be financial year

Machine type is to be written as DOUMATIC, BCM, DGS etc.

*Periods of working on a type of machine of less than 3 months a year are not to be recorded

IV. Details of Award / Achievement's during service life(1 page desirable)

SN	Division Level		Headquarter Level		
	Cash / Certificate	Awarded by	Cash / Certificate	Awarded by	Sign of SSE/TM/SDI

	of age	
21	Family Particulars	
22	Contact No. In case of Emergency	
23	Present Address and home contact No.	
24	Permanent Address and home contact No.	

V. Details of IRTMTC Training (Initial/Refresher Course) (1 page desirable)

Name of Course	Period		Due date for next course	Sign of SSE/TM/SDI
	From	To		

VI. Details of IRTMTC Training (Special Course) ***(1 page desirable)***

Name of Course	Period		Due date for next course	Sign of SSE/TM/SDI
	From	To		

VII. Details of ZTC Training (G&SR)(Initial/Refresher course)(1 page desirable)

Name of Course	Period		Due date for next course	Sign of SSE/TM/SDI
	From	To		

VIII. Particulars of PME *(1 page desirable)*

Category	Date of PME	Certificate No.	Issued by	Next PME Due Date	Sign of SSE/TM/SDI
Up to age of 45 @ 4 year. **For age between 45 to 55 @ 2 year** **Above age of 55 @ every year**					

IX. Particulars of Machine Competency *(1 page desirable)*

(Dy.CE /TM Line or an officer authorized by him)

Date	Validity Period		Issuing Authority	Due date for reissue	Sign of SSE/TM/SDI
	From	To			

X. Particulars of LRD(Road/Route Learning and Signal particulars)

(4 pages desirable)

Section	Line UP/DN etc.	Date of Completion	Sign of JE/SSE/TM	Sign of LI or SSE/TM/SDI

XI. Observations/Remarks of Inspecting Officials*(6 pages desirable)*

Date	Designation	Date of Completion Sign of JE/SSE/TM	Remarks	Sign of LI or SSE/TM/SDI

XII. Observations/Remarks of Inspecting Supervisors *(16 pages desirable)*

Date	Designation	Date of Completion Sign of JE/SSE/TM	Remarks	Sign of LI or SSE/TM/SDI

Annexure 7.3

Competency Certificate

Office of Dy.Chief Engineer,

Track Machine Line,

……, ……..

Photograph

This is to certify that Shri…….. Designation…… is competent & authorized to operate the Track Machines on ……. Railway.

Item Description	Last Done/ Attended	Next Due
PME		
Initial/Refresher Course, IRTMTC, ALD		
Initial/Refresher Course, G & SR, ZRTI, ….		

This certificate is valid upto …….

No……

Date……..

Dy.CE/TM Line/……

Annexure 7.4

Proforma of Machine Ready Memo

FORM NO: TMM-1

Zonal Railway Serial No. …….

Station ……. Date ……..

Machine Type - ……	Machine Type - ……
Machine No. - ……	Machine No. - ……
SSE/JE/TM/I - ……	SSE/JE/TM/I - ……
Machine ready time - ……	Machine ready time - ……

Machine Type - ……	Machine Type - ……
Machine No. - ……	Machine No. - ……
SSE/JE/TM/I - ……	SSE/JE/TM/I - ……
Machine ready time - ……	Machine ready time - ……

Use one box for each machine. SSE/JE/TM/I of leading machine shall co-ordinate for making this memo.

To – SM/……..

SSE/JE/P.Way/…….

Annexure 7.5

Proforma of Block Permit

Form No.TMM-2

Zonal Railway…… Serial No. …….

Track Machine block permit

(SSE/JE/TM,SSE/JE/P.Way/Record)

Station …….Date ……Time ……..Hrs……. Minutes…….

SSE/JE/TM (Machine Type/No.) ……..

No. of Track Machines to enter into block section for working ……

BLOCK DETAILS

On Track "Track Machine(s)" is granted block on ……Road, between ……station & ……..station, from ……Hrs……..Mts. to ……Hrs. …..Mts. i.e. for ……. Hrs.& …… Mts. Entering from ……..station& clearing into ……..station.

Special instructions if any ……

SIGNAL DETAILS

You are hereby authorized to pass Signal No. ……at "ON" position & proceed beyond/up to …….. Signal.

You are hereby authorized to pass IBS/IBH Signal No. ……at "ON" position. (If available)

Block Back/Block Forward No. ……..in words …….

CAUTION ORDER DETAILS

Km. ……..to Km…… with ……KMPH due to ……

Km. ……..to Km…… with ……KMPH due to ……

Km. ……..to Km…… with ……KMPH due to ……

PILOT – OUT DETAILS

Your Track Machine (Type of Machine) ……is being piloted-out from(Line)……to ……..(Line). All points enroute are correctly set and padlocked.

If not applicable, may be strike out.

Signature of SSE/JE/TM Signature of SSE/JE/P.Way Signature of Station Master

Time …….. Time ……..(Station Master's stamp)

Annexure 7.6

Instructions for Machine Working in Automatic Signalling Section

1.0 Double Line – In terms of GR – 9.02 - Duties of SSE/JE/TM when Automatic Stop Signal on double line is to be passed at "ON"

(a) When SSE/JE/TM finds an Automatic Stop Signal with an 'A' marker at 'ON', he shall bring his track machine to a stop in the rear of the signal. After bringing his track machine to a stop in the rear of the signal, the SSE/JE/TM shall wait there for **one minute by day** and **two minutes by night**. If after waiting for this period, the signal continues to remain at 'ON', proceed ahead, as far as the line is clear, towards the next stop signal in advance exercising the great caution so as to stop short of any obstruction.

(b) SSE/JE/TM shall show a stop hand signal towards the rear when the track machine has been so stopped at an Automatic Stop signal.

(c) Where owing to the curvature of the line, fog, rain or dust storm or other cause, the line ahead cannot be seen clearly, SSE/JE/TM shall proceed at a very slow speed, which shall under no circumstances exceed 8 kmph. Under these circumstances SSE/JE/TM may seek the assistance of SSE/JE/P.Way.

(d) When so, SSE/JE/P.Way shall accompany SSE/JE/TM in the driving cab, before track machine moves forward, to assist the SSE/JE/TM in keeping a sharp lookout.

(e) When an automatic stop signal has been passed at 'ON' the SSE/JE/TM shall proceed with great caution until the next stop signal is reached. Even if this signal is 'OFF' the SSE/JE/TM shall continue to look out for any possible obstruction short of the same. He shall proceed cautiously up to that signal and shall act upon its indication only after he has reached it.

2.0 Single Line –In terms of G R No. 9.07 – Duties of SSE/JE/TM when an Automatic Stop signal on single line is to be passed at "ON".

(a) When SSE/JE/TM finds an automatic stop signal with an 'A' marker at 'ON' he shall bring his train to a stop in rear of that signal and wait there for one minute by day and two minutes by night.

(b) If after waiting for this period the signal continues to remain at 'ON" and if telephone communication is provided near the signal, SSE/JE/TM shall contact the Station Master of the next block station or the Centralized Traffic Control Operator of the section where Centralized Traffic Control is provided, and obtain his instructions. The Station Master or the Centralized Traffic Control Operator, as the case may be, shall after ascertaining that there is no train ahead up to the next signal and that it is otherwise safe for the SSE/JE/TM to proceed so far as is known, give permission to the SSE/JE/TM to pass the signal in the "ON' position and proceed up to the next signal, as may be provided under special instructions.

(c) If no telephone is provided near the signal or if the telephone communication provided near the signal is out of order and cannot be made use of, the SSE/JE/TM shall give the prescribed code of whistle and exchange

signal with the SSE/JE/TM available on last track machine and then proceed to pass the signal as far as line is clear, up to the next stop signal in advance, exercising great caution so as to stop short of any obstruction.

(d) SSE/JE/TM shall show a stop hand signal towards the rear when the train has been so stopped at an automatic signal.

(e) Where owing to the curvature of the line, fog, rain or dust storm or other cause, the line ahead cannot be seen clearly, SSE/JE/TM shall proceed at a very slow speed, which shall under no circumstances exceed 8 kmph. Under these circumstances SSE/JE/TM may seek the assistance of SSE/JE/P.Way.

(f) When so, SSE/JE/P.Way shall accompany with SSE/JE/TM in the driving cab, before track machine moves forward, to assist the SSE/JE/TM in keeping a sharp look-out.

(g) When an automatic stop signal has been passed at 'ON' the SSE/JE/TM shall proceed with great caution until the next stop signal is reached. Even if this signal is 'OFF', the SSE/JE/TM shall continue to look out for any possible obstruction short of the same. He shall proceed cautiously up to that signal and shall act upon its indication only after he has reached it.

3.0 Procedure to Pass Semi-Automatic Stop Signal at 'ON' – In terms of G & SR NO. 9.14 – Procedure when Semi-Automatic Stop signal is 'ON'.

(a) When a semi-automatic stop signal is worked as an automatic stop signal, rule 9.02 or 9.07 shall apply as the case may be.

(b) When a semi-automatic stop signal is worked as a manual stop signal and becomes defective, it may only be passed under relevant rules.

(c) When SSE/JE/TM is authorised to pass a semi-automatic stop signal at 'ON' by taking 'OFF' the calling-on signal fixed below it, he shall follow the precautions stipulated in Rule 9.02 or 9.07 as the case may be.

4.0 Procedure to Pass Gate Stop Signal at 'ON' In Automatic Signalling Territory – In terms of G & SR No. 9.15 - If SSE/JE/TM finds a Gate stop signal at 'ON' in an Automatic signalling territory –

(a) SSE/JE/TM shall comply with the provisions of rule 9.02 or 9.07 as the case may be, if the 'A' marker is illuminated, or

(b) If the 'A' marker light is extinguished, SSE/JE/TM shall sound the prescribed code of whistle to warn the gateman and bring his track machine to a stop in rear of the signal. If after waiting for one minute by day and two minutes by night, the signal is not taken 'OFF', SSE/JE/TM shall draw his track machine ahead cautiously and stop in the rear of the level crossing. After ascertaining that the gates are closed against road traffic and on getting hand signals from the gateman, and in his absence, SSE/JE/TM shall sound the prescribed code of whistle and cautiously proceed up to the next stop signal complying with the provisions of rules 9.02 or 9.07 as the case may be.

5.0 Procedure for Movement of Track Machines against the Direction of Traffic in Automatic Block System – In terms of G & SR No. 9.13, movement of track machines against the direction of traffic on the automatic block system – in automatic signalling territory, track machine shall run in established direction of traffic only.

Movement of track machines against the established direction of traffic is not permitted. When in an emergency it becomes unavoidably necessary to move track machine against the established direction of traffic, this shall be done only under special instructions, which shall ensure that the line behind the said track machine up to the station in rear is clear and free from obstruction.

6.0 Protection of a Track Machine stopped in an Automatic Block Signalling Section – In terms of G & SR NO. 9.10 - Protection of a track machine stopped in an Automatic Block Signalling Section

(a) When a track machine is stopped in an automatic block signalling section, SSE/JE/TM shall immediately exhibit a stop hand signal towards the rear and check up that the tailboard or taillight is correctly exhibited.

(b) If the stoppage is on account of accident, failure, or obstruction and the machine cannot proceed, SSE/JE/TM shall sound the prescribed code of whistle and track machine shall be protected immediately as per Rule 6.03 except that for the protection of the occupied line one detonator shall be placed at 90 m from the track machine on the way out and similarly two detonators, 10 m part, not less than 180 m from the track machine or at such distance as has been fixed by special instructions.

7.0 Procedure of Block Working of Track Machine in An Automatic Block Signalling Section

(a) In terms of G & SR 4.65-5 (iii, a) – Track machine(s) shall work under the line block only.

(b) Automatic block signalling section shall be treated as absolute block section.

8.0 Intermediate Block Hut/Section

(a) When track machine is going on line clear

(i) While going on line clear from one station to another, if IBS/IBH is found signal at "ON" position then track machine shall be stopped. After 05 minutes SSE/JE/TM shall contact the SM in rear station through the phone provided under the IBH/IBS. If SM allows the machine to go ahead at on position then SM shall give his private No. Thereafter track machine shall proceed to the station in advance.

(ii) While going on line clear from one station to another, if IBS/IBH is found signal at "ON" position then track machine shall be stopped. After 05 minutes SSE/JE/TM shall contact the SM in rear station through the phone provided under the IBH/IBS and if phone provided under the IBS/IBH is found defective and if visibility is clear then track machine shall proceed to the station in advance with 15 kmph, if visibility is not clear then track machine shall proceed to the station in advance with 08 kmph.

(iii) After reaching to the station in advance, SSE/JE/TM shall report as above in writing to SM on duty of station in advance.

(b) When track machine is going for block working IBH/IBS shall be treated as cancelled and track machine may pass IBS/IBH signal at ON position. This fact shall be mentioned in the memo given by station master.

Annexure 7.7

Infringement to Indian Railways Schedule of Dimension by Various Track Machines

(A) Infringement to Schedule of Dimensions – 1939

SN	Name of the Machine	Make	Transport-ation Code	Infringement Description	Actual Dimension of Machine (mm)	Dimension as per SOD (mm)	Speed in kmph	
							Self pro-pelled	In train formation
1.	Continuous Tamping Machine (09 - 32 CSM)	M/s Plasser		i) Min. dia of new wheel tread measured at 63.5 mm from wheel gauge face.	730	914	60	40
				ii) Min. rigid wheel base.	1800	1830		
2.	Points & Crossing Tamping Machine (UNIMAT 08-275-3S)	M/s Plasser		i) Min. dia of new wheel tread measured at 63.5 mm from wheel gauge face.	730	914	60	40
				ii) Min. rigid wheel base.	1800	1830		
				iii) Max. distance between any two adjacent axles.	12200	11890		
3.	Dynamic Track Stabilizer (DGS-62N)	M/s Plasser		i) Min. dia of new wheel tread measured at 63.5 mm from wheel gauge face	730	914	60	50
				ii) Min. rigid wheel base for bogie.	1500	1830		
4.	Ballast Cleaning Machine (RM-80)	M/s Plasser		i) Min. dia of new wheel tread measured at 63.5 mm from wheel gauge face.	900	914	40	30
				ii) Max. distance apart of bogie centres.	22200	14785		
				iii) Max. length of bogie or roof.	29360	21340		
				iv) Max. length of under frames over headstocks.	29360	21030		
				v) Max. length over side buffers.	30600	22300		
				vi) Max. distance apart between adjacent axles.	20370	11890		
5.	Ballast Regulator (66-4)	M/s – Kershaw USA		i) Min. dia of new wheel tread measured at 63.5 mm from wheel gauge face. 4-wheeler vehicles.	838.2	914	50	40
				ii) Max. length of body or roof for 4-wheeler vehicles.	9120	8540		
				iii) Max. length over side buffers	10389	9810		

SN	Name of the Machine	Make	Transp-ortation Code	Infringement Description	Actual Dimension of Machine (mm)	Dimension as per SOD (mm)	Speed in kmph	
							Self pro-pelled.	In train formation
6.	Track Relaying Train (P-811-S)	MIs Tamper Corpora-tion, USA		i) Min. dia of new wheel tread measured at 63.5 mm from wheel gauge face.	838.2	914	5	50
				ii) Min. rigid wheel base for bogie truck.	1727.2	1830		
				iii) Max. distance apart between any two adjacent axles	12072.94	11890		
7.	Points & Crossing Cleaning Machine (RM-76 UHR)	M/s Plasser		i) Min. dia. of new wheel tread measured at 63.5 mm from wheel gauge face.	900	914	40	30
				ii) Max. distance apart of bogie centre.	19500	14785		
				iii) Max. length of body or roof for bogie vehicles.	23490	21340		
				iv) Max. length of under frames over headstocks.	23490	21030		
				v) Max. length over side buffers	24730	22300		
				vi) Max. distance apart between two adjacent axles	17670	11890		
8.	Points & Crossing Changing Machine (AMECA-T-28)	M/s –Ameca Italy		i) Wheel Gauge: Maximum Minimum	 1604 1598	 1602 1599	10	-
				ii) Min. dia of new wheel tread measured at 63.5 mm from wheel gauge face	400	914		
9.	Ballast Cleaning Machine (RM80-92-I)	M/s Plasser		i) Min. dia on wheel tread.	900	914	50	40
				ii) Max. distance apart of bogie centre	22200	14785		
				iii) Max. length of body	28300	21340		
				iv) Max. length over head stock	28300	21030		
				v) Max. length over side buffers.	29540	22300		
				vi) Max distance apart between any two adjacent axles.	20370	11890		
10.	Shoulder Ballast Cleaning Machine (FRM-80)	M/s Plasser		i) Min. dia on wheel tread.	900	914	40	30
				ii) Max. distance apart of bogie centres	16000	14785		
				iii) Max. length of body	38200	21340		
				iv) Max. length over head stocks	38200	21030		
				v) Max. length over side buffers.	39470	22300		
				vi) Max distance apart between any two adjacent axles.	14170	11890		
11.	UTV 502 L	M/s –Tamper Carpora-tion USA		i) Min. dia on new wheel tread.	838.2	914	60	40
				ii) Max. rigid wheel base.	8000	6100		
				iiii) Max. length of body for 4-wheel vehicle 3200 mm wide.	11303	8540		
				iv) Max. length over head stocks.	11303	8540		
				v)Max. length over side buffers.	12522	9810		

SN	Name of the Machine	Make	Transp-ortation Code	Infringement Description	Actual Dimension of Machine (mm)	Dimension as per SOD (mm)	Speed in kmph	
							Self pro-pelled.	In train formation
12.	P&C Tamping Machine 08-275 (UNIMAT).	M/s Plasser		i) Min. dia on wheel tread.	730	914	60	40
				ii) Min. distance apart of bogie centres.	11500	11933		
				iii)Min. bogie wheel base.	1500	1830		
13.	Ballast Regulator 56-3	M/s –Kershaw USA		i) Min. dia on wheel tread.	832	914	60	40
				ii) Max. length of body.	11074	8540		
				iii) Max. length over headstocks.	11074	8540		
				iv) Max. length over side buffers.	12344	9810		
14.	Multipurpose Tamping Machine.	M/s Plasser		i). Min. dia on wheel tread measured at 63.5mm from gauge face.	730	914	60	40
				ii) Min. rigid wheel base for bogie truck of any vehicle.	1800	1830		
15.	High Output Tamping Machine (09-3X) 20.0t axle load.	M/s Plasser	CHTM0 9-3XP1	i). Min. dia on the tread of new carriage wheel, measured at 63.5mm from the wheel gauge face.	730	914	60	60
				ii) Max. distance apart of bogie centres for bogie vehicles 3250 mm wide.	15700	14785		
				iii) Min. rigid wheel base for bogie truck of any vehicle.	1500-Satellite bogie. 1800-Front and Rear bogies			
				iv) Max. Length of underframes over headstocks for bogie vehicles 3250mm wide.	21700	21030		
				v) Max. Length over side buffers for bogie vehicles 3250mm wide.	22940	22300		
16.	Utility Track Vehicle	M/s-BHEL		i)Distance apart for centres of buffers .	1956	1955	50	50
				ii) Max Length of body or roof for 4 wheeler vehicle 3200 mm wide.	10516	8540		
17.	Shoulder Ballast Cleaning Machine (FRM-85F).	M/s Plasser	CSBC85 FP	i) Min. Dia on the tread of new carriage or wagon wheel, measured at 63.5 mm from wheel gauge face.	900	914	40	30
				ii) Max. distance apart of bogie centres .	16000	14785		
				iii) Max. Length of body or roof.	38200	21340		
				iv) Max. Length of under frames over head stocks.	38200	21030		
				v) Max. Length over side buffers.	39440	22300		
				vi) Max. distance apart between any two adjacent axles.	14170	11890		

SN	Name of the Machine	Make	Transp-ortation Code	Infringement Description	Actual Dimension of Machine (mm)	Dimension as per SOD (mm)	Speed in kmph	
							Self pro-pelled.	In train formation
18.	Worksite Tamper Model-VPR-02M	M/s -Metex		i). Min. dia of wheel tread measured at 63.5mm from gauge face.	710.325	914	40	40
				ii) Minimum projection for flange of new tyre, measured from tread at 63.5mm from wheel gauge face.	27.675	28.50		
				iii) Max. thickness of flange of tyre ,measured from wheel gauge face at 13 mm from outer edge of flange.	32.31	28.5		
				iv) Max. Length over side buffers for bogie vehicle 3250mm wide.	23550	22300		
19.	Utility Track Vehicle.	M/s- OEPL		i) Max. thickness of flange of tyre ,measured from wheel gauge face at 13 mm from outer edge of flange.	29.4	28.5	60	50
				ii) Max. rigid wheel base.	6500	6100		
				iii) Max Length of body or roof for 4 wheeled vehicle 3200 mm wide.	9000	8540		
				iv) Max. Length of under frames over head stocks.	9000	8540		
				v) Max. Length over side buffers.	10270	9810		

(B) Infringement to Schedule of Dimensions – 2004

SN	Name of the Machine	Make	Transp-ortation Code	Infringement Description	Actual Dimension of Machine (mm)	Dimension as per SOD (mm)	Speed in kmph	
							Self pro-pelled.	In train formation
1	High Output Tamping Machine (09-3X) 18.5t axle load.	M/s Plasser		i). Min. dia on the tread of new carriage or wagon wheel, measured at 63.5mm from the wheel gauge face.	730-for Satellite bogie. 850- for Front and Rear bogies.	914	50	65
				ii) Max. thickness of flange of tyre ,measured from wheel gauge face at 13 mm from outer edge of flange.	28.68	28.50		
				iii)Maximum height above rail level for floor of any unloaded vehicle.	1370	1345		
				iv) Max. distance apart of bogie centres for bogie vehicles .	15700	15241		
				v) Min. rigid wheel base for bogie truck of any vehicle	1500-for Satellite bogie. 1800-for Front and Rear bogies.	1830		
				vi) Max. Length of body or roof for bogie vehicles.	21700	21340		
				vii) Max. Length over side buffers for bogie vehicles.	22940	22300		
2.	High Output Tamping Machine (09-3X) 21.0t axle load.	M/s Plasser	CHTM09-3XP	i). Min. dia on the tread of new carriage or wagon wheel, measured at 63.5mm from the wheel gauge face.	730-for Satellite	914	50	65
				ii) Max. thickness of flange of tyre ,measured from wheel gauge face at 13 mm from outer edge of flange.	29.46	29.4		
				iii) Max. height above rail level for floor of any unloaded vehicle.	1370	1345		
				iv) Distance apart for centres of buffers	1955	1956		
				v.) Max. distance apart of bogie centres for bogie vehicles	15700	14900		
				vi) Min. rigid wheel base for bogie truck of any vehicle.	1500-for Satellite bogie. 1800-for Front and Rear bogies.	1830		
				vii) Max. Length of body or roof for bogie vehicles.	21700	21340		
				viii) Max. Length over side buffers for bogie vehicles.	22940	22300		

SN	Name of the Machine	Make	Transp-ortation Code	Infringement Description	Actual Dimension of Machine (mm)	Dimension as per SOD (mm)	Speed in kmph	
							Self pro-pelled.	In train formation
3.	Utility Track Vehicle with Mobile Crane.	M/s Phooltas		i) Max. thickness of flange of tyre ,measured from wheel gauge face at 13 mm from outer edge of flange.	29.4	28.5	50	60
				ii) Distance apart for centres of buffers.	1956	1955		
				iii) Max. rigid wheel base	8000	6100		
				iv) Max. Length of body or roof for 4 wheeled vehicle.	11900	8540		
				v) Max. Length over side buffers for 4 wheeled vehicle	13170	9810		
4.	Utility Track Vehicle.	M/s BEML	CUTVB	i) Max. thickness of flange of tyre ,measured from wheel gauge face at 13 mm from outer edge of flange.	29.4	28.5	50	50
				ii) Distance apart for centres of buffers.	1956	1955		
				iii) Max. rigid wheel base for four wheeled vehicles.	7000	6100		
				iv) Max Length of body or roof for 4 wheeled vehicle.	10850	8540		
				v) Max. Length over side buffers for 4 wheeled vehicle.	12120	9810		
5.	Dynamic track Stabilizer	M/s BHEL	CTSBH	i) Maximum height above rail level for floor of any unloaded vehicle.	1450	1345	50	50
6.	Ballast Regulating Machine Model-USP 2000 SWS	M/s Plasser	BRM/USP-2000SWS	i) Min. Dia on the tread of new carriage or wagon wheel, measured at 63.5 mm from wheel gauge face.	850	914	50	60
				ii) Max. thickness of flange of tyre ,measured from wheel gauge face at 13 mm from outer edge of flange.	28.64	28.5		
				iii) Maximum height above rail level for floor of any unloaded vehicle.	2100	1345		
				iv) Distance apart for centres of buffers	1955	1956		
7.	Point & Crossing Tamping Machine (UNIMAT 08-475-4S)	M/s Plasser	PCTM/08-475-4S	i) Max. thickness of flange of tyre ,measured from wheel gauge face at 13 mm from outer edge of flange.	29.46	28.50	50	65
				ii) Maximum height above rail level for floor of any unloaded vehicle.	1370	1345		
				iii) Distance apart for centres of buffers.	1955	1956		
				iv) Min. rigid wheel base for bogie truck of any vehicle.	1800	1830		
				v) Max. Length over side buffers for bogie vehicle.	28370	22300		

SN	Name of the Machine	Make	Transp-ortation Code	Infringement Description	Actual Dimension of Machine (mm)	Dimens-ion as per SOD (mm)	Speed in kmph	
							Self pro-pelled.	In train formation
8.	Lifting, Lining ,Levelling and Tamping Machine Model-08-32C DUOMATIC	M/s Plasser		i) Min. Dia on the tread of new carriage or wagon wheel, measured at 63.5 mm from wheel gauge face.	850	914	50	50
				ii) Max. thickness of flange of tyre ,measured from wheel gauge face at 13 mm from outer edge of flange.	28.64	28.50		
				iii) Distance apart for centres of buffers.	1955	1956		
				iv) Min. rigid wheel base for bogie truck of any vehicle.	1800	1830		
9.	Dynamic Track Stabilizer (Model DSP-C8T)	M/s Metex	DTSC8TMX	i) Min. Dia on the tread of new carriage or wagon wheel, measured at 63.5 mm from wheel gauge face.	860	914	50	50
				ii) Maximum height above rail level for floor of any unloaded vehicle.	1635	1345		
10.	Ballast Regulating Machine Model-PBR 400R	M/s Plasser	CBRM400RP	i) Min. Dia on the tread of new carriage or wagon wheel, measured at 63.5 mm from wheel gauge face.	730	914	50	50
				ii) Max. thickness of flange of tyre ,measured from wheel gauge face at 13 mm from outer edge of flange.	28.64	28.50		
				iii) Distance apart for centres of buffers.	1955	1956		
				iv) Max Length of body or roof for 4 wheeled vehicle.	9750	8540		
				v) Max. Length over side buffers for 4 wheeled vehicle.	11020	9810		
11.	Rail Grinding Machine(RGI-72)	M/s Loram	CRG 72L	i) Maximum height above rail level for floor of any unloaded vehicle.	1683	1345	50	65
12.	Ballast Regulating MachineModel-RPB-01	M/s Metex	CBRM/RPB-01MX	i) Maximum height above rail level for floor of any unloaded vehicle.	1700	1345	50	50
				ii) Distance apart for centres of buffers.	1955	1956		
13.	Ballast Cleaning Machine	M/s BHEL		i) Maximum height above rail level for floor of any unloaded vehicle.	1600	1345	50	50
				ii) Max. distance apart of bogie centres for bogie vehicles.	18000	15241		
				iii) Max. Length of body or roof for bogie vehicles	23840	21340		
				iv) Max. Length over side buffers for bogie vehicles.	25110	22300		
				v) Max. distance apart between any two adjacent axles	15900	12345		
14.	Worksite Tamper without flat car Model-VPR-02M	M/s Metex	TTM/VPR-02M	i) Min. Dia on the tread of new carriage or wagon wheel, measured at 63.5 mm from wheel gauge face.	732	914	50	50

SN	Name of the Machine	Make	Transp-ortation Code	Infringement Description	Actual Dimension of Machine (mm)	Dimens-ion as per SOD (mm)	Speed in kmph	
							Self pro-pelled.	In train formation
15.	Ballast Regulating Machine Model SPZ 210k	M/s Gemac China	CBRMG	i) Max. rigid wheel base for four wheeled vehicles.	7500	6100	50	60
				ii) Max. length of body or roof for 4 wheeled vehicle.	13590	8540		
				iii) Max. Length over side buffers for 4 wheeled vehicle.	14780	9810		
16.	Multipurpose Tamping Machine Model-Unimat Split Head MFI	M/s Plasser	CMTUSHP	i)Min. Dia on the tread of new carriage or wagon wheel, measured at 63.5 mm from wheel gauge face.	730	914	45	45
				ii)Distance apart from centres of buffers.	1955	1956		
				iii) Max. Length over side buffers for bogie vehicles.	28570	22300		
17.	Rail Borne Maintenance Vehicle (RBMV) Model-RBMV.01	M/s Phooltas	RBMVP	i)Min. Dia on the tread of new carriage or wagon wheel, measured at 63.5 mm from wheel gauge face	952	914	65	65
				ii) Distance apart from centres of buffers .	1956	1956		
				iii)Max. Length over side buffers for bogie vehicles	21337	21340		

CHAPTER 8

PERIODICAL MAINTENANCE AND ASSOCIATED INFRASTRUCTURAL FACILITY

801 **General -** Periodical maintenance including overhauling and timely repairs are essentially required for ensuring reliable and efficient working of track machines. There should be a proper schedule of maintenance and necessary infrastructure should be created for carrying out the maintenance of track machines.

802 **Maintenance Schedule for Track Machines -** Periodical maintenance and repairs of machines shall be carried as per Schedules I to VII. Schedule VI and VII pertains to Intermediate Overhauling (IOH) and Periodic Overhauling (POH) respectively, which are to be carried out at ZMD/CPOH workshops as specified and as per prescribed frequency.

(1) Maintenance Schedule for Various Track Machine - Periodicity and duration of various maintenance schedules for all the machines are tabulated in **Annexure-8.1**

(a) Guidelines for Maintenance Schedules– for Track Machines other than RGM

(i) Adherence to the schedules should be ensured duly informing the division in advance. Similar practice should be followed for the schedules to be carried out at satellite depots so that the works of the division are not left midway at critical junctures.

(ii) IOH and POH should be incorporated and exhibited in the deployment planning so that divisions are aware in advance and can plan the works accordingly.

(iii) RDSO shall issue instructions on maintenance to be done in different schedules including POH of different machines. Items to be checked and attended under various schedules shall generally be as per RDSO's instructions. In case of any doubt, it is to be referred to RDSO for clarification & till then the maintenance can be done as per manufacturer's instructions provided in their manuals. Reference to the manufacturer may also be made keeping RDSO informed. Minor changes in instructions may be done with approval of CE/TM of the concerned Zonal Railway.

(iv) Before undertaking POH & IOH, major components, sub-assemblies and spares required should be procured and kept in readiness.

(v) 3rd POH should be carried out if the machine is expected to work for residual life of around 3000 to 4000 ERH after the 3rd

POH. Railways should prepare a 2-years plan for POH & IOH of track machines (firm for one year and tentative for next year), so that procurement of spares, a long lead item, can be done in time.

(b) Guidelines for Maintenance Schedules for RGM

(i) Maintenance of RGM shall be done by a separate maintenance team attached with each RGM. This team will be in addition to the operating team.

(ii) Day to day maintenance (schedule-I) of RGM should be done by separate maintenance group before and after traffic block, as it involves considerable work load & time. Operating staff of the machine shall do daily pre-block check and duration of such check should not be more than one hour.

(iii) Schedule II to IV should be carried out by maintenance staff along with regular operating staff.

(iv) During IOH/POH of RGM (schedule VI & VII), the operating staff as well as maintenance staff should be actively involved and carry out jobs along with IOH/POH staff.

(v) Items to be checked and attended under various schedules shall normally be as per RDSO's instructions. In case of any doubt, it is to be referred to RDSO for clarification & till then the maintenance can be done as per manufacturer's instructions on the subject or as considered suitable with approval of CE/TM of the holding Railway.

(2) Inspection of Wheel and Axle of On-Track Machine - Track Machine Wheels are solid wheels and follow the wheel profile as per RDSO drawing no. SKETCH-91146. Visual inspection, Physical inspection and Ultrasonic inspection of the wheels and axles of on-track machines are required to be done during initial procurement. The ultrasonic testing of new wheels shall be done according to the RDSO report no. IRS R-34-2003. Wheels and axles shall also be subjected to visual and physical examination. Ultrasonic testing for axles only, should be done during service at prescribed frequency laid down by RDSO.

(a) Visual and Physical Examination - Visual and physical inspection of wheels of on-track machines shall be done during service as per "Procedure for visual & physical inspection of wheels and axles of on-track machines" issued by Track Machine and Monitoring Directorate, RDSO (REPORT NO. TM-170, July-2012). Inspection shall be done on inspection pit line at a frequency of once in a year or once after every 1000 engine running hours whichever is earlier. However periodic visual inspection for any apparent wheel defect

shall be carried out with 50 hours schedule, which is done at track machine siding/stabling line.

(b) Ultrasonic Testing of Wheel and Axle of On-Track Machines

(i) Ultrasonic flaw detection (USFD) testing of Axles and Wheels of On-Track Machines shall be done as per "Code of procedures for Ultrasonic testing of axles and wheels of large track machines" issued for different on-track machines by Research Designs and Standards Organization (RDSO).

(ii) The wheels shall be tested ultrasonically at the time of initial procurement only.

(iii) The frequency of ultrasonic examination of axles of on-track machines shall be between 40,000 to 45,000 kms of running or three years, whichever is earlier.

(iv) Testing shall be done by supervisors possessing regular/refresher course certificate from RDSO.

(v) Criteria for the supervisors to be selected and trained for USFD testing of axles shall be one of the following:

- Graduate in Science with Physics from a University or Institution recognized by Central/State Govt./UGC/or International Institute/University.
- 3 years regular Diploma in Mechanical/Civil/Electronics/ Electrical/Metallurgical/Chemical Engineering from a University or Institution recognized by Central/State Govt./Technical education board or International Institute/University.
- M.Sc in Chemistry provided that Physics was one of the subjects at ISC/Intermediate/10+2 levels.
- B.E./B.Tech. in Mechanical/Civil/Electronics/Electrical/Chemical/ Metallurgical/I.T/Computer Science from a University or Institution recognized by Central/State Govt./Technical education board or International Institute/University.

(vi) The validity of initial course certificate shall be 3 years and refresher course certificate shall be 5 years.

(vii) Research Designs and Standards Organization regularly conducts training of supervisors for ultrasonic examination of axles and wheels. Railways shall nominate their eligible staff for the required training.

803 **Types of Workshops -** For carrying out the repairs as well as periodical maintenance of track machines, five types of repairs and maintenance facilities/ workshops shall be developed as below: -

(1) Central Periodical Overhauling Workshop (CPOH).

(2) Intermediate Overhauling Workshop (IOH)/Zonal Machine Depot.

(3) Satellite depot.

(4) Mobile Workshop cum Transport Van.

(5) Camp Coach Workshop.

804 Central Periodical Overhauling Workshop (CPOH) - CPOH workshops are developed depending on the holding of machines on Indian Railway and geographical considerations.

(1) Functions of CPOH – The functions of CPOH workshop are as under:

(a) POH of machines.

(b) Overhauling of tamping units, transmission gearboxes, axle assembly and lifting, lining assembly for unit exchange either at shop floor or field.

(c) Post POH service to Zonal Railways and performance monitoring of overhauled items.

(d) Development of expertise, standardization/ documentation/ dissemination of knowledge with respect to overhauling of assemblies.

(e) Study and development of inter-changeability of components and sub-assemblies.

(f) Study of failures, finding out remedial measures, troubleshooting, modification & refinement of maintenance practices.

(g) Procurement of stores and equipment required for POH and gadgets required for testing of overhauled machines, sub-assemblies and components.

(h) Inspection and testing of machines/assemblies received prior to and after POH.

(i) Study of new imported machines and preparation of inventory list with complete series of machines (machine-wise) and checking for changes with reference to old series of machines.

(j) Development of indigenous substitutes and reliable competitive sources of supply.

(k) Development of drawings and material specifications for manufacture of spares.

(l) Providing shop floor training regarding maintenance of machines to Zonal Railways on demand.

(m) Acting as knowledge centres for track machines.

(2) POH Planning for Track Machines to be Attended

(a) POH Programme from Zonal Railways - Zonal Railways shall send the list of machines due for POH as also requirement of overhauled tamping units for a two-year period in the month of December every year to the respective CPOH workshop in the format given in **Annexure 8.2.**

(b) Finalization of POH Programme by CPOH Workshop

(i) CPOH shall prepare POH program for two years (Firm for the first year and tentative for second year) and forward it to Railway Board by 31st January every year for approval. Railway Board shall issue the approved POH programme of track machines and distribution of tamping units for 2 years period.

(ii) CPOH shall start indenting process to procure spares considering the requirements of two years based on programme submitted to Railway Board.

(iii) The Zonal Railway should send detailed report to Dy.CE/TM (CPOH) at least two months in advance of arrival of the machine for CPOH workshop to take preparatory action and arrangement of additional spares, if any.

(iv) Annual targets for track machines and machine deployment programme shall be fixed considering the POH, IOH and transit duration.

(3) POH Execution

(a) Staff of machine shall accompany the machine during POH and actively associate themselves in overhauling of the machine.

(b) On arrival of the machine SSE/TM (CPOH) and SSE/TM (in-charge) should conduct a joint survey of machine for assessment of repairs and reconditioning works required.

(c) Zonal railways shall accept Provisional Debits (Adjustment Memo) towards the expenditure on POH raised by Dy. CE/TM (CPOH), on arrival of machine. Final debit shall be raised after actual completion of work duly verified by SSE/TM (in-charge) of the machine.

(d) Model activity flow chart for POH of track machine is depicted in **Annexure 8.3.** CPOH shall decide the items to be replaced, repaired, and reused during POH work and will consult the railway, if required.

(e) Unit Exchange for POH: To minimize POH duration, activities of POH should be planned on the basis of unit exchange for various sub-assemblies like tamping units, engines and other important assemblies/sub-assemblies.

(f) **Process control:** POH process should be controlled by preparing machine register, checklists, method sheets and statement, working instructions, specifications and activity chart.

(g) Typical list of infrastructural facilities like shed & structure, plant & machinery, measuring/working tools including other miscellaneous equipment required for CPOH workshop shall be as per Para 809.

(h) CPOH workshops shall adhere to the prescribed time schedules for completing the POH. Delay, if any, beyond stipulated period must be promptly advised to concerned owning railway well in advance giving detailed reasons.

(4) Dispatch of Machine after POH

(a) After out turn of machine from shed, all functional parameters shall be calibrated as per rated tolerances specified for the machine in drawing and catalogues. Null setting of all sensing units, transducers, pendulums and PCBs shall be carried out on zero defect track. All display units/input values shall be validated with calibrated masters as listed in **Annexure 8.5.** Format for master calibration is given in **Annexure 8.6.**

(b) It is desirable that an officer of the owning railway may be present during the testing and trials. SSE(TM)/in-charge shall take over the overhauled machine, only after all the tests and trials have been carried out and test run certificate is signed. A test run certificate shall be jointly signed by officials of Zonal Railways and CPOH along with a summary repair sheet with details of POH execution as per **Annexure 8.7** before dispatch of machine.

(c) It is desirable to have third party audit/inspection organized by CPOH workshop involving OEM and necessary rectification measures taken before dispatch of machine.

(d) CPOH should furnish the list of spares replaced during POH and released components shall be handed over to machine staff, unless agreed otherwise, with the approval of Dy.CE/TM/Line of the Zonal Railway.

(e) The CPOH workshop shall stand warranty for satisfactory working of the machine and tamping units and other assemblies/sub-assemblies for a period of six months after commissioning of the machine. Zonal Railway shall report such issues, which are beyond the technical expertise of Zonal Railways, for attention and assistance from CPOH.

(f) Feedback of machine and tamping unit performance after POH should be sent to CPOH after three months and as and when required in the format given in **Annexure 8.8.**

(g) CPOH workshop shall separately advise the machine holding railway about the components under trial and modification carried out during POH, if any. Zonal Railways shall keep special watch on these items and submit feedback to CPOH workshop about their performance.

805 Intermediate Overhauling Workshop (IOH)/Zonal Maintenance Depot (ZMD) - There shall be at least one Zonal Machine Depot with each Zonal Railway. The IOH of all the machines shall be carried out as per the schedule VI mentioned in para 802 unless otherwise stipulated by OEM. In addition, POH of machines, which are specified in para 802, shall also be undertaken in ZMD.

(1) Functions of ZMD – The functions of ZMD workshop are as under:

(a) IOH of all machines.

(b) POH of machines specified to be done in ZMD.

(c) Need based overhauling/unit replacement of engines, tamping units, gear assembly, axle assembly and lifting, lining assembly etc. either at shop floor or field.

(d) Field attention in case of break down by creating service groups of different functions like hydraulics, pneumatic, electronic, electrical etc. either at the Zonal depot level or satellite depot level.

(e) Assistance to machine & satellite depot staff or execution of heavy repair and schedule maintenance.

(f) Study of failures, finding out remedial measures, troubleshooting and development of maintenance practices.

(g) Procurement of stores and equipment required for operation and maintenance of all machines including IOH/POH.

(h) Annual calibration of machines gauges.

(i) Preparation of inventory list for new series /model of machine with complete series of machines (machine-wise) and checking for changes with reference to old series of machines.

(j) Development of indigenous substitutes and reliable competitive sources of supply.

(2) Facilities at ZMD - Facilities at ZMD shall include stores for spares and consumable with facilities for housing the track machines and carrying out the repairs, assembly and replacement of unit components along with the offices for SSE and track machine officers. Typical list of infrastructural facilities like shed & structure, plant & machinery, measuring/working tools including other miscellaneous equipment required for ZMD shall be as per Para 809.

(3) **Programme of IOH & POH -** Programme for IOH of machines and POH of select machines should be prepared by Zonal Railways on the lines similar to POH i.e. firm for first year and tentative for second year by end of January and sent to Railway Board for information and taking it into account while finalising the targets for the Railways. Procurement action for the requirement of 2 years shall be taken.

(4) **Planning of IOH –** Proper advance preparation shall be done after survey of the machines to be overhauled. Items like engine top overhaul, renewal of pumps and motors and valves, changing of tamping unit, tyre turning, attention to measuring system, attention to tamping units and brake etc. should be planned during IOH. In addition, attention shall also be given to other items on condition basis as per repeated failures reflected in the logbook. Normally, two IOH shall be done between two POHs. If IOH/POH at lesser interval is considered necessary, approval of the CE/TM should be obtained. Normally such instances will arise only if there are major structural damages or cracks or major overhaul of power packs or major modifications are necessary. Heavy repairs of machines &overhauling of assemblies can be clubbed with POH/IOH.

806 Satellite Depot - In addition to IOH workshop, Zonal Railways will set up at least one Satellite Depot in each division to meet the repairs and maintenance needs of a fleet of machines.

(1) **Functions of Satellite Depot –** The track machines shall be brought to the satellite depots for repairs, which cannot be performed in the field as also for maintenance schedule of machines as specified in para 802. In addition, it shall also be used for need-based attention to tamping units, gear assembly, axle assembly and lifting, lining assembly and for unit exchange of assemblies and sub-assemblies not feasible in the field.

(2) **Facilities at Satellite Depot –** Facilities at satellite depot shall include stores for spares and consumable with facilities for housing the track machines and carrying out the repairs, assembly and replacement of unit components along with the offices for SSE and track machine officers. Typical list of infrastructural facilities like shed & structure, plant & machinery, measuring/working tools including other miscellaneous equipment required for satellite depot shall be as per Para 809.

807 Mobile Workshop-Cum-Transport Van - Each railway shall have mobile workshops (road vehicles with necessary workshop facilities) in each zonal depot as well as in each satellite depot of adequate capacity to repair track machines, which are deployed all over the zone.

(1) **Functions of Mobile Workshop –** The mobile workshop shall attend each track machine periodically, as required to cover schedules II to V and breakdown repairs. It will carry spares and consumables to be replenished.

(2) **Facilities in Mobile Workshop –** For this, sufficient inventory of spares and tools will be maintained in the van. The mobile workshop shall be provided with well-trained staff who can handle repair of various systems. Mobile workshop should be self-propelled covered van or on trailer unit mounted on trolley, which can be pulled by truck or any other road vehicle. Zonal Railways shall either procure the trucks and get these units fabricated or hire such units by inviting tenders. Typical facilities to be provide in a mobile workshop are given in **Annexure 8.9.**

808 Camping Coach Workshop - One camping coach shall be provided with each machine for accommodating machine staff. It shall be a coach modified and provided with facilities for boarding and lodging of machine staff. It shall have necessary cocking facility, toilets and bathrooms.

(1) **Functions of Camping Coach Workshop –**The coach shall contain provisions of small workshop for emergency repairs/store for material at site also. These shall be manufactured or re-furnished as per the drawing issued by RDSO. It will cater for Schedules I, II, occasionally schedule III and emergency breakdowns.

(2) **Facilities in Camping Coach Workshop –**The spares and equipment for minor repairs and daily usage shall be kept in camping coach. Typical list of equipment to be kept in camping coach workshop are given in **Annexure 8.10.**

809 Infrastructure Facility for Operation and Maintenance of Track Machines - Following facilities are necessary for day-to-day working and maintenance of machines:

(1) **Infrastructural Facilities for CPOH, ZMD and Satellite Depot –** Various infrastructure facilities like shed & structure, tracks including pit lines, Plant & machinery (Test benches/work benches/Inspection & measuring tools/ working tools) and other miscellaneous equipment required for CPOH, ZMD and satellite depot are given **in Annexure 8.4.**

(2) **Storage and Carriage Facilities for Fuel and Oil –** Special road mobile unit(s) to carry and distribute fuel, lubricants and hydraulic oils with pumping arrangements shall be provided. The mobile van carrying fuel will have to fulfil statutory safety standards in this regard. More than one unit may be necessary for each satellite depot depending upon the number of machine units to be catered for. Storage facilities may also be provided at selected locations for storing HSD oil required for day-to-day operations. Option of involving oil companies on the lines of RCDs can also be considered.

(3) **Transportation of Spare Parts & Assemblies –** Spare parts and assemblies are required to be transported by road. One or more road vehicles with crane facility for loading/unloading shall be arranged at the zonal

maintenance depot and satellite depot, depending on requirement. Hiring will be done if departmental vehicles are not available.

(4) **Communication Facilities –** All JEs/SSEs shall be provided with voice and data connectivity through CUG mobile SIMs. A walkie-talkie/VHF communication system should be available between the site of the work and the adjoining stations. Machine in-charge shall have two walkie-talkie sets to the frequency used by operating staff i.e. loco pilot, guard and station master. Where communication from mid-section to Engineering Control is available, such facility can also be used. Necessary Head mounted communication system (covering one ear only) shall also be made available for communication during the actual work in machine like BCM, SBCM, T-28, TRT and TLE etc. The officers of Track Machines Organization shall be provided with adequate communication facilities including STD and FAX at ZMD & SD. Each machine shall be equipped with a mini laptop & Data card facility for uploading the details in TMS.

(5) **Repairs and Stabling Facilities for Machines -** In addition to sidings at SSE (P.Way)'s headquarters, siding of adequate lengths for stabling of track machines & camping coaches shall be made available at stations about 10-30 kms apart suitably distributed on UP and DN line side, depending upon the number of lines, and availability of paths and the traffic. These sidings shall be provided with facilities of electricity (for lighting, welding& charging etc.), water supply, and space for storage of critical spares and consumable to enable minor repairs to be carried out in the workshop of the camping coach. Bio latrine or portable latrine should also be provided at resting sites. A typical sketch of stabling siding with facilities is shown in **Annexure 8.11.**

(6) **Resting &Cooking Facilities for Staff -** Rest house facilities shall be provided, attached to each SSE/Sectional Engineer (P. way)'s office for track machine staff. One camp coach i.e. Workshop-cum-Rest Van shall be provided with each track machine. As far as possible, TM sidings & rest rooms shall be at the same location. Camping coach shall be capable of being attached to the machine and also in train formation. List of equipment and facilities in this coach shall be in accordance with the standard plans **(Annexure 8.13, 8.14 & 8.15)** issued by RDSO. Arrangements for housekeeping & cooking in camping coaches & rest rooms shall be made either departmentally or by outsourcing. Typical layout of track machine rest house is at **Annexure 8.12.**

810 **Camp Coach Facilities -** The camping coach shall be provided with air brake system. The coupling to be provided shall be normal IRS standard screw coupling. The modification work for camping coaches shall be performed in coach as per drawings enclosed as **Annexure 8.13, 8.14 & 8.15** and the amenities shall be provided as per **Annexure 8.16**. Railways may

decide to have different drawing & amenities as per their local requirements with the approval of PCE. Railway may convert selective cabin/cabins into Air-Conditioned cabin/cabins as per requirement. In this respect, electrical circuit may be modified accordingly. Painting scheme for camp coach is given in **Annexure 8.17.**

(1) Living Area - The living area in the proposed layouts is marked as 'X'

(a) Additional roof ceiling (false ceiling) shall be provided following preferably the same curvature of existing roof ceiling with minimum height of 2400 mm at centre, from floor level. This will reduce the heat in the coach.

(b) Beds shall be preferably provided at the level of lower berths as in 1st AC coaches.

(c) The size of beds shall be 1850X850 mm and should be box type with cushion as in 1st AC coaches.

(d) The beds shall be boxed type and can be open in upward direction to accommodate linen items etc.

(e) Upper existing berths shall be removed.

(f) In place of upper existing berths, wooden cabinets shall be provided of size 1850x300x300 mm (approx.) above all the beds just below the false ceiling. Alternatively bunk beds may be provided.

(g) Flooring in this area shall be of same standard as in the 1st AC class.

(h) Sofa, tables and chairs shall be provided as shown in the drawing.

(2) Kitchen

(a) Granite/marble top shall be provided on cooking platform (550 mm wide).

(b) One of the existing water tanks of the coach shall be used for water arrangement.

(c) One exhaust fan shall be provided at suitable location. Chimney may also be provided in the kitchen.

(3) Bathing Area & Toilet

(a) One of the existing water tanks of the coach shall be used for bathroom water arrangement. Complete bath fittings as available in AC 1st Class coach, shall be provided in bathing area.

(b) The toilet shall be of 'bio-toilet' type being used in Indian Railways. In this regard schedule of Tech. requirement no. C-9908 Rev.1 issued by RDSO may be followed as guidelines.

(c) One exhaust fan each should be provided in the toilet, bathroom and kitchen area.

(4) Electrification Plan

(a) The electric supply arrangement shall be as in **Annexure-8.18.**

(b) Battery blocks provided with the coach shall be utilized as it is, except the self-generating equipment and alternator. In place of these, 230 V AC/110 V DC battery chargers will be provided for the purpose of charging of coach batteries. The coach electrification shall be from following sources of supply.

(i) Electricity may be obtained from outside supply available at Railway stations/sidings.

(ii) A 3-phase 10 KVA silent DG set will be housed in camp coach for fulfilling requirement of electricity.

(iii) In case of failure of batteries, there shall be the provision of 9 roof sunken CFL to be illuminated by AC supply.

(iv) Solar panels on the roof with inverter may be provided to promote the use of renewable energy.

(c) The electrical appliances/fittings to be provided in camp coach are being listed below:

(i) Fluorescent lights roof sunken – 21 Nos.

(ii) Brackets fans 225 mm – 17 Nos.

(iii) Roof sunken lights (CFL-15W) – 09 Nos.

(iv) Exhaust fan – 03 Nos.

(v) Power point 15A – 02 Nos.

(vi) Plug point – 02 Nos.

(vii) Emergency lights – 04 Nos.

(5) Store Management

(a) Storeroom shall be provided, for keeping the small spares of the machine, as shown in the camp coach layout.

(b) This store shall be provided with cabinets/rakes at suitable height with locking arrangement.

(c) In addition to store given in coach layout additional under slung boxes shall be created for heavy spares of the machines. These boxes shall be used for keeping empty drums, hydraulic hoses and heavy spares of the machine. The design of the boxes shall be according to the requirement for particular machine. The safety factor for welding work of the boxes shall be sufficiently high so that there shall be no failure on account of welding work.

Annexure 8.1

Maintenance Schedule of Track Machines

(A) Schedule I to V

Group of Machines	Type of Schedule	Schedule -I	Schedule –II	Schedule -III	Schedule IV	Schedule -V
All machines except RGM	Periodicity	Daily	50 Hrs.	100 Hrs.	200 Hrs	1000 Hrs
	Location	TM Siding	TM Siding	TM Siding	TM Siding	SD/ZMD
	Duration	One Hour	Two hours	01 day	02 Days	07 days
RGM	Periodicity	Daily	50 Hrs.	250 Hrs.	1000 Hrs	3000 Hrs
	Location	TM Siding	TM Siding	TM Siding	TM Siding	CPOH
	Duration	08 Hour	10 hours	12 hrs.	03 Days	10 days

(B) Schedule VI (IOH) and VIII (POH)

MACHINE OTHER THAN RGM								FOR RGM			
Schedule Type	**Periodicity (Engine hours)**	**Machine Group – I (TLE, BRM, RBMV & UTV) (PCCM, DTS & TRT)**		**Machine Group – II (WST-08-32, UNIMAT-2S &3S& HOT-CSM)**		**Machine Group – III (HOT-3X & UNIMAT-4S) (BCM, SBCM)**		**Schedule Type**	**Periodicity (Engine hours EH)**	**Machine Group IV (RGM)**	
		Duration	**Location**	**Duration**	**Location**	**Duration**	**Location**			**Duration**	**Location**
Schedule – VI (IOH)	2000 (IOH)	PCCM, DTS: 21 Days, TRT: 45 days and other 15 days.	ZMD	30 days	ZMD	For BCM/SBCM 45 days. For others 30 days	ZMD	Schedule – VI (IOH)	6000	20 days	CPOH
Schedule – VII (POH)	1st – 8000, 2nd – 14000 and then at 4000	For TRT 1st – 70 days, 2nd – 90 days. For Other 1st – 45 days, 2nd – 60 days	ZMD/ CPOH	1st – 60 days, 2nd – 75 days	CPOH	For BCM/SBCM 1st – 90 days, 2nd – 105 days. For Other 1st – 75 days, 2nd – 90 days	CPOH	Schedule – VII (POH)	15000 or 60 months which ever is earlier	1st POH-45 Days 2nd POH-60 Days	CPOH

Annexure8.2

Formats for POH Planning

Railway_____

i) Details of M/c Proposed for POH during Current Year

SN	M/c No Proposed for POH	Date of Last POH	Engine Hrs Since Last POH	Cumulative progress of M/c after last POH	Governing reason for proposed POH	Engine Details		Probable date of sparing of M/c
						Make & Model No	Engine Hrs since last overhauling	

ii) Tentative List of Machines to be proposed for POH next Year

S No	M/c No	Type of M/c	Date of Last POH

iii) Demand for Tamping Units

Type of Tamping Unit	M/c No for which required	Month of Requirement
CSM/WST		
UNI-3S		
09-3X		
UNI-4S		
VPR		
MPT		

Annexure 8.3

POH Flow Chart

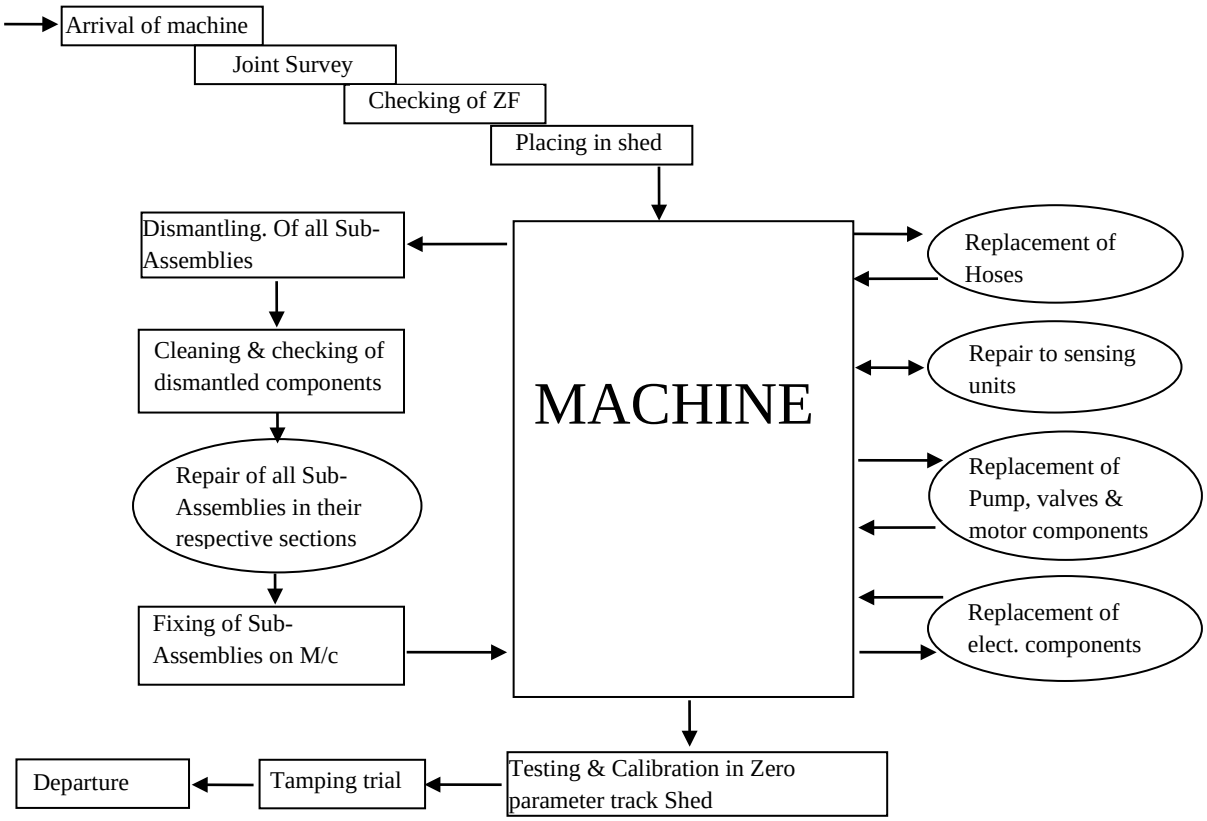

Annexure8.4

REQUIREMENT OF FACILITIES IN VARIOUS DEPOTS

SN	Description of items	For POH capacity of 50TMUs per annum	For POH capacity of 24TMUs per annum	IOH shed/ZMD	Satellite Depot
1.	**Cleaning Shed:** This shed should be separate and outside the main POH shed to avoid pollution of dust, oil, grease etc. For painting no separate area is needed as painting of the machine is carried out concurrently with the progress of rebuilding in the repair shed itself. Galvanised Aluminium /Aluminium sheet with thermal insulation layer and natural drift exhaust system which will have 10-15% translucent sheets in the roof shall be provided. Pneumatic circuits with tapping arrangements at required locations shall be provided. Concrete aprons of approx. 20 m length on either side of shed with hydrant and jet cleaning arrangement having proper drainage system including industrial waste treatment plant/system is to be provided.	50 m X 15 m (To have only one line with light shed)	50 m X 15 m (To have only one line with light shed)	50 m X 15 m (To have only one line with light shed)	-
2.	**POH & Repair shed:** Each shed to have two EOT cranes of 10 Ton capacity each with EPU (epoxy polyurethane) flooring, inspection pits and grilled base. Galvanised Aluminium /Aluminium sheet with thermal insulation layer and natural drift exhaust system which will have 10-15% translucent sheets in the roof shall be provided. Pneumatic circuits with tapping arrangements at required locations shall be provided.	3 Sheds of 100 m X 20 m with 2 lines in each shed.	2 Sheds of 100 m X 20 m with 2 lines in each shed.	1 Sheds of 100 m X 20 m with 2 lines	1 shed of 50 m length x 20 m width with 2 lines

SN	Description of items	For POH capacity of 50TMUs per annum	For POH capacity of 24TMUs per annum	IOH shed/ZMD	Satellite Depot
3.	**Shed for sub-assemblies**: For Gearbox, axle, Engine, hydraulic, pneumatic, electrical, electronic and Lifting units sections with suitable partition with air conditioning & test bench Each shed to have one EOT crane of 5 t capacity with EPU (epoxy polyurethane) flooring. Galvanised Aluminium /Aluminium sheet with thermal insulation layer and natural drift exhaust system which will have 10-15% translucent sheets in the roof shall be provided. Pneumatic circuits with tapping arrangements at required locations shall be provided.	One shed of 100 m X 20 m	One shed of 50 m X 20 m	One shed of 30 m X 20 m	
4.	**Shed for overhauling of 200 tamping unit:** Each shed to have one EOT crane of 5 t capacity with EPU (epoxy polyurethane) flooring. Galvanised Aluminium /Aluminium sheet with thermal insulation layer and natural drift exhaust system which will have 10-15% translucent sheets in the roof shall be provided. Pneumatic circuits with tapping arrangements at required locations shall be provided. Concrete aprons of approx. 20 m length with hydrant and jet cleaning arrangement having proper drainage system shall be provided.	One shed of 100 m X 20 m	One shed of 100 m X 20 m	--	--
5.	Inspection Pit: Each depot will be provided with an inspection pit of length given with proper drainage arrangement for examination of under gears of machines	60 m	60 m	60 m	20 m
6.	Rooms for inspection, JFT (Jig Fixture and Templates) & Rejected items with proper storage/racks arrangements.	4 rooms each of size 8 m X 5 m	4 rooms each of size 8 m X 5 m	2 rooms each of size 8 m X 5 m	-
7.	Store ward with proper storage/racks arrangements.	12 rooms each of size 8 m X 10 m	8 rooms each of size 8 m X 10 m	8 rooms each of size 8 m X 10 m	Two room of size 5 m x 7 m

SN	Description of items	For POH capacity of 50 TMUs per annum	For POH capacity of 24 TMUs per annum	IOH shed/ZMD	Satellite Depot
8.	Open fenced space for stacking of release spares etc.	30 m X 30 m	20 m X 20 m	20 m X 20 m	-
9.	Open fenced space for keeping of scrap	30 m X 30 m	20 m X 20 m	20 m X 20 m	-
10.	Administrative block (FF): For officers' chambers, office, visitor's room, model room, conference hall with all requisite facilities.	100 m X 8 m	50 m X 8 m	50 m X 8 m	-
11.	Administrative block (GF): Hall for SSEs, drawing cell, staff lunch room, change room etc. (separate earmarked facility for lady staff)	100 m X 8 m	50 m X 8 m	50 m X 8 m	5 m x 7 m
12.	Rest house- Adequate facilities for kitchen, dining and recreation should be provided.	2 suits for Officers, 8 rooms for Supervisors & 32 bedded dormitory for staff.	2 suits for Officers, 6 rooms for Supervisors & 20 bedded dormitory for staff.	6 rooms for Supervisors & 20 bedded dormitory for staff.	2 rooms of size 4.5m x4.5 m for supervisor and staff
13.	Overhead water tank including bore well with standby bore well and pumping arrangements.	50000 Gallons capacity	50000 Gallons capacity	25000 Gallons capacity	10,000 gallon capacity
14.	Rooms for electrical installation/substation etc.	4 rooms each of size 5 m X 5 m	4 rooms each of size 5 m X 5 m	2 rooms each of size 5 m X 5 m	-
15.	Centralised compressor room	One room of size 5 m X 5 m	One room of size 5 m X 5 m	One room of size 5 m X 5 m	-
16.	Boundary wall with barbed wire fencing enclosing the workshop having provision of CCTV cameras with watch towers, high mast lighting towers to cover entire workshop area.	Yes	Yes	Yes	Yes
17.	Time office with electronic devices to control the entry/exit system, security Check Post and provision of CCTV cameras for the purpose	One room of size 3 m x 5 m	One room of size 3 m x 5 m	One room of size 3 m x 5 m	One room of size 3 m x 5 m
18.	Test track having one line with suitable curvature	2 X 500 m with one PSC turnout	2 X 500 m with one PSC turnout.	1 X 500 m with one PSC turnout.	1 x 150 m with 1 PSC turnout
19.	Calibration track with washable apron and light shed.	Two tracks of 50 m each	One track of 50 m	One track of 50 m	One track of 50 m

S. No	Description of items	For POH capacity of 50 TMUs per annum	For POH capacity of 24 TMUs per annum	IOH shed/ZMD	Satellite Depot
20.	Garage for housing road vehicles	For 5 vehicles	For 3 vehicles	For 2 vehicles	For 2 vehicles
21.	Cycle and Scooter shed	Two nos.	One no.	One no.	One no.
22.	Canteen	Yes	Yes	Yes	-
23.	Garbage disposal Pits	Yes	Yes	Yes	-
24.	Line for camping coach	250 m	250 m	100 m	50 m
B. <u>Plant & machinery</u>					**-**
I. <u>Test Benches</u>					
1.	Test bench for tamping unit with computer interface and data acquisition system. (Motor driven with optional system for engine)	2 Set	2 Set	1 set	-
2.	Hydraulic test bench (engine driven) with load testing facility with computer interface and data acquisition system	1 Set	1 Set	1 Set	-
3.	ZF test bench with computer interface and data acquisition system (engine driven)	1 Set	1 Set	-	-
4.	Test bench for PCBs	1 No.	1 No.	1 No.	-
5.	Test bench for pendulum and transducer	2 Nos	2 Nos.	1 No.	-
6.	Test bench for sensors	2 Nos	1 No.	1 No.	-
7.	Test bench for alternator and self starter	2 Nos	2 Nos.	1 No.	-
8.	I.C. Tester	2 Nos	1 No.	1 No.	-
9.	Pneumatic test bench	1 No.	1 No.	1 No.	-
10.	Axle testing bench	1 No.	1 No.	1 No.	-
11.	Oil seal tester for tamping unit section	4 Sets.	2 Sets.	1 Set.	-
12.	Pinion shaft test bench	1 No.	1 No.	1 No.	-
13.	Engine load testing machine	1 No.	1 No.	-	-
II. Work Benches					
1.	Work bench for gearbox assembly.	4 Nos.	2 Nos.	1 No.	-

SN	Description of items	For POH capacity of 50 TMUs per annum	For POH capacity of 24 TMUs per annum	IOH shed/ZMD	Satellite Depot
2.	Work bench for tamping unit assembly (CSM/UNI)	16 Nos	12 Nos.	2 Nos.	-
3.	Work bench for tamping unit assembly (09-3X)	4 Nos.	2Nos.	-.	-
4.	Work bench for tamping unit assembly (UNI 4S)	4 Nos.	2 Nos.	-	-
5.	Work bench for ZF assembly	2 Nos.	2 Nos.	-	-
III. Inspection and measuring equipments					
1.	USFD testing machine suitable for axle testing	1 Set	1 Set	1 Set	-
2.	Pneumatic bore gauges for measurement up to 1 micron	2 Sets	1 Set	-	-
3.	Three dimensional (Coordinate) measuring machine	1 No.	1 No.	1 No.	-
4.	Portable hardness tester	1 No.	1 No.	1 No.	1 No.
5.	Ring Gauge off size	2 Sets	1 Set	1 Set	-
6.	Non contact thermometer	4 Nos	2 Nos	1 No	1 No.
7.	Z. F. mobile test kit	2Nos.	2 Nos.	1 No	-
8.	Wheel diameter (700-1200 mm) measuring gauge (digital)	2Nos.	2 Nos.	1 No	1 No.
9.	Wheel profile gauge	2 Nos.	1 No.	1 No.	1 No.
10.	Surface roughness tester	1 No.	1 No.	1 No.	-
11.	Rubber hardness tester	1 No.	1 No.	1 No.	-
12.	Surface plate with V block	1 No.	1 No.	1 No.	1 No.
13.	Combination gauge	1 No.	1 No.	1 No.	-
14.	Combination dial gauge	2 Nos	2 Nos	-	-
15.	Height gauge (0-500mm)	1 No.	1 No.	1 No.	1No.
16.	Thread gauge off size	4 Sets	2 Sets	1 set	1 set
17.	Feeler gauge off size	1 Set	1 Set	1 Set	1 Set
18.	Radius gauge off size	1 Set	1 Set	1 Set	1 Set
19.	Portable chrome coating thickness gauge	1 Set	1 Set	1 Set	1 Set
20.	Hydrometer	1 No.	1 No.	1 No.	1 No.
21.	Temperature gauge contact type	2 Nos.	2 Nos.	1 No	1 No

S. No	Description of items	For POH capacity of 50TMUs per annum	For POH capacity of 24TMUs per annum	IOH shed/ZMD	Satellite Depot
22.	Noise level (dB) meter	2 Nos.	2 Nos.	1 No	1 No
23.	Vibration meter	1 No.	1 No.	-	-
24.	Tachometer (0-9999 rpm) contact type	1 No.	1 No.	1 No.	1 No.
25.	Tachometer (0-9999 rpm) contact less type	2 No.	2 No.	2 No.	1 No.
26.	LASER particle counter	1 No.	1 No.	1 No.	-
27.	Injector Tester	1 No.	1 No.	1 No.	-
28.	Precision inspection instruments i.e vernier calipers, micrometers, dial gauges, bore gauges & manual torque wrench, spanner sets	4 Sets	2 Sets	2 Sets	1 set
29.	Nominated inspection gadgets as prescribed by OEMs i.e. CUMMINS, MWM, DEUTZ , PARKER, SKF etc.	1 Set	1 Set	1 Set	-
30.	Digital Multimeter	6 Nos.	4 Nos.	2 Nos.	1 No.
IV. Working Tools					
1.	Set of synchronized jacks upto 50 t capacity for machine lifting (Mechanical screw)	3 Sets	2 Sets	1 set	1 Set
2.	Nominated assembly tools as prescribed for ZF	1 Set	1 Set	-	-
3.	Mechanized (Hydraulic) arrangement for lifting and removing heavy assemblies (Fork lifter) 2-5 t capacity.	4 Sets	2 Sets	2 Sets	1 Set
4.	Hydraulic power pack for testing (Operation of hydraulic tool)	2 Sets	1 Set	1 Set	1 set
5.	10 t EOT cranes in POH shed	2 Nos. each shed= 6 in total	2 Nos. each shed= 4 in total	2 Nos	-
6.	5 t EOT cranes in sub assembly shed	1 No.	1No.	=	1 No.
7.	5 t EOT cranes in tamping unit shed	1 No.	1 No.	-	-
8.	Mechanical tools, spanners	8 Sets	4 Sets	2 Sets	1set
9.	Pneumatic tools for assembly/ disassembly work	8 Sets	4 Sets	2Sets	1 set
10.	Hose crimping machine set for crimping of pressure, super hi-pressure and return hose assemblies of different size	1No.	1No.	1No.	-

SN	Description of items	For POH capacity of 50 TMUs per annum	For POH capacity of 24 TMUs per annum	IOH shed/ZMD	Satellite Depot
11.	Power hacksaw machine	2 Nos.	2 Nos.	1No.	-
12.	Circular saw for metal cutting	3 Nos.	2 Nos	1No.	-
13.	Gas cutting equipment	5 Nos.	3 Nos.	2 Nos.	1 No.
14.	MIG (metal inert gas) welding Plant	2 Nos	1 Nos.	1 Nos.	-
15.	Arc welding plant (DC)	8 Nos.	4 Nos.	2 Nos.	2 nos.
16.	Spray painting set with compressor	3 Sets	2 Sets	1 Sets	1 set
17.	High pressure Jet cleaning Machine	2 Sets	2 Sets	1 Sets	1 set
18.	D.G set for standby power supply 500 KVA	1 Set	1 Set	1 Set 250 KVA	1 set of 100KVA
19.	Freezing unit (Double compressor) up to (–) 50 degree	2 Sets	1 Set	1 Set	1 set
20.	Heating tank (Oil bath)	2 Sets	1 Set	1 Set	1 set
21.	Heating tank with auto temp cut-off (oil bath)	1 Set	1 Set	1 Set	-
22.	Hydraulic press 50 t capacity	1 Set	1 Set	1 Set	-
23.	Heavy duty mechanical jacks, pullers, pushers up to 50 t capacity	1 Set	1 Set	1 Set	1 set
24.	Milling machine (0-300 mm)	1 No.	1 No.	-	-
25.	Radial drilling machine (1.5 m height and 32 mm drill size)	1 No.	1 No.	1 No.	-
26.	Radial drilling machine (1.5 m height and up to 20 mm drill size)	1 No.	1 No.	1 No.	1No.
27.	Lathe (3 ft.)	1 No.	1 No.	1 No.	-
28.	Lathe (6 ft.)	1 No.	1 No.	-	-
29.	Lathe (12 ft.)	1 No.	1 No.	1 No.	-
30.	Shaper Machine (0-300 mm stroke)	1 No.	1 No.	-	-
31.	Tool grinder (Rotary type 500 mm disc)	2 Nos.	2 Nos.	-	-
32.	Horizontal boring machine (2000 X 500 mm table)	1 No.	1 No.	-	-
33.	Centralized compressor (250 CFM)	1 No	1 No	1 No (100 CFM)	1 No (50 CFM)
34.	Portable filter	4 Nos.	2 Nos.	2 Nos.	1 No.
35.	Vertical boring machine	1 No	1 No.	-	-
36.	Wheel de-pressing and pressing machine	1 No.	1 No.	-	-

SN	Description of items	For POH capacity of 50 TMUs per annum	For POH capacity of 24 TMUs per annum	IOH shed/ZMD	Satellite Depot
37.	Induction heater	2 Nos	2 Nos	=	-
38.	Induction type bearing removal unit (0-200 mm dia)	1 Set	1 Set	1 Set	-
39.	Electrical crimping machine	2 Sets	2 Sets	-	-
40.	Hand riveting machine	2 Nos.	2 Nos.	2 Nos.	1 No.
41.	Pneumatic riveting machine	1 No.	1 No.	1 No.	1 No.
42.	Hot air blower	1No.	1 No.	1 No.	-
43.	High Pressure cleaning chamber for tamping unit with water jet system	1 Set	1 Set	1 Set	-
44.	Accumulator nitrogen gas filling equipment	2 sets	2 sets	1 set	1 No.
45.	Hand drill 24V operated	1 No.	1 No.	1 No.	1 No.
46.	Hand drill 230V operated	1 No.	1 No.	1 No.	1 No.
47.	Pencil grinder	1 No.	1 No.	1 No.	1 No.
48.	Drill, reamers & tap set 4,6,8,10,12,14,16, 20 & 24 mm	1 Set.	1 Set.	1 Set.	1 No.
49.	Hose cutting machine	1 No.	1 No.	1 No.	1 No.
50.	Battery charger (12/24V)	2 Nos.	2 Nos.	2 Nos.	1 No.
51.	Desalination plant	1 No.	1 No.	1 No.	-
52.	Soldering de-soldering unit	2 Nos.	2 Nos.	2 Nos.	1 No.
53.	Hot cleaning tank	1 No.	1 No.	1 No.	-
54.	Wire thimble punching machine	1 No.	1 No.	1 No.	1 No.
55.	Torque wrenches (Elect or Pneumatic Control)	16 Nos.	8Nos.	8Nos.	1 No.
III.	**Miscellaneous**				
1.	Battery operated truck (2 t capacity)	1 No.	1 No.	1 No.	1 No.
2.	Material carrying van (1 t capacity)	1 No.	1 No.	1 No.	-
3.	CC TV with camera web based covering complete shed & store	1 Set	1 Set	1 Set	-
4.	P.A. System	1 Set	1 Set	1 Set	-
5.	Intercom system (50 lines)	1 Set	1 Set	1 Set	-

SN	Description of items	For POH capacity of 50 TMUs per annum	For POH capacity of 24 TMUs per annum	IOH shed/ZMD	Satellite Depot
6.	Effluent treatment Plant	1 Set	1 Set	1 Set	-
7.	Mechanized floor cleaning machine (Scrubber)	2 Nos.	2 Nos.	1No.	-
8.	Release material handling hand trolley	4 Nos.	2 Nos.	1 No.	1 No.
9.	Light weight collapsible ladder with working platform (up to 10 m max height)	1 Set	1 Set	1 Set	-
10.	Industrial RO with water cooler of suitable capacity	2 Sets	1 Set	1 Set	1 No.
11.	Industrial Hooter	1 Set	1 Set	1 Set	1 No.
12.	Multi utility Vehicle (6 seater)	1 No.	1 No.	1 No.	1 No.
13.	Truck (10 t)	1 No.	1 No.	1 No.	1 No.
14.	Fire fighting system	1 Set	1 Set	1 Set	-
15.	Turfer (5 ton capacity)	1 No.	1 No.	1 No.	-
16.	Apron, Helmet, goggles, mask & safety shoes etc.	300 Sets	150 Sets	50 Sets	20 Sets
17.	Heavy duty industrial vacuum cleaner	2 Nos.	2 Nos.	1No.	1No.

Annexure 8.5

Machine wise list of 'Masters' required for calibration of parameters

SN	Parameter to be calibrated	Master Ref	Range of Master	CSM	09-3X	WST	UNI-2S	UNI-3S	DGS	BCM	FRM
(A) Hydraulic System											
1	Squeezing Pressure	PG-3	0-250 bar	100-120 bar	100-120 bar	100-120 bar	100-130 bar	100-130 bar	N/A	N/A	N/A
2	System Pressure	PG-3	0-250 bar	140 bar	140 bar	140 bar	140 bar	140 bar	100 bar	N/A	175 bar
3	Vibration Pressure left	PG-3	0-250 bar	150 bar	210 bar	180 bar	150 bar	150 bar	N/A	N/A	N/A
4	Vibration Pressure Right	PG-3	0-250 bar	150 bar	210 bar	180 bar	150 bar	150 bar	N/A	N/A	N/A
5	Counter Pressure of Small Squeezing	PG-3	0-250 bar	35-40 bar	55bar	35-40 bar	N/A	N/A	N/A	N/A	N/A
6	Counter Pressure of Big Squeezing	PG-2	0-160 bar	140 bar	130 bar	140 bar	N/A	N/A	N/A	N/A	N/A
7	Accumulator Pressure 32L-1	PG-6	0-280 bar	85 bar	85 bar	85 bar	85 bar	85 bar	N/A	N/A	N/A
8	Accumulator Pressure 32L-2	PG-6	0-280 bar	N/A	85 bar	N/A	N/A	N/A	N/A	N/A	N/A
9	Accumulator Pressure 32L-3	PG-6	0-280 bar	N/A	85 bar	N/A	N/A	N/A	N/A	N/A	N/A
10	Accumulator Pressure 20L	PG-6	0-280 bar	100 bar	N/A	100 bar	N/A	N/A	N/A	N/A	N/A
11	Accumulator Pressure 10L	PG-6	0-280 bar	N/A	N/A	N/A	100 bar	100 bar	60 bar	N/A	N/A
12	Accumulator Pressure 2.5 L-1	PG-6	0-280 bar	20 bar	20 bar	20 bar	N/A	N/A	N/A	N/A	N/A
13	Accumulator Pressure 2.5 L-2	PG-6	0-280 bar	20 bar	20 bar	20 bar	N/A	N/A	N/A	N/A	N/A
14	Accumulator Pressure 2.5 L-3	PG-6	0-280 bar	N/A	20 bar	N/A	N/A	N/A	N/A	N/A	N/A
15	Accumulator Pressure 2.5 L-4	PG-6	0-280 bar	N/A	20 bar	N/A	N/A	N/A	N/A	N/A	N/A
16	Accumulator Pressure 2.5 L-5	PG-6	0-280 bar	N/A	20 bar	N/A	N/A	N/A	N/A	N/A	N/A
17	Accumulator Pressure 2.5 L-6	PG-6	0-280 bar	N/A	20 bar	N/A	N/A	N/A	N/A	N/A	N/A
18	Accumulator Pressure 2.5 L-7	PG-6	0-280 bar	N/A	140 bar	N/A	N/A	N/A	N/A	N/A	N/A
19	Accumulator Pressure 2.5 L-8	PG-6	0-280 bar	N/A	140 bar	N/A	N/A	N/A	N/A	N/A	N/A
20	Pressure setting of Safety valve for system Pressure	PG-3	0-250 bar	175 bar	175 bar	175 bar	175 bar	175 bar	175 bar	210 bar	210 bar

SN	Parameter to be calibrated	Master Ref	Range of Master	CSM	09-3X	WST	UNI-2S	UNI-3S	DGS	BCM	FRM
21	Pressure setting of oil cooler motor	PG-3	0-250 bar	100 bar	210 bar	150 bar	150 bar	150 bar	150 bar	120 bar	200 bar
22	High pressure setting	PG-3	0-250 bar	150 bar	150 bar	180 bar	180 bar	180 bar	N/A	N/A	N/A
23	ZF oil pressure	PG-5	0-30 bar	12-15 bar	12-15 bar	12-15 bar	12-15 bar	12-15 bar	12-15 bar	N/A	N/A
24	Charging pressure of variable pumps	PG-5	0-30 bar	30 bar	30 bar	N/A	N/A	N/A	30 Bar	30 bar	30 bar
25	Work drive pressure	PG-4	0-600 bar	0-210 bar	0-240 bar	160 bar	N/A	N/A	210 bar	N/A	N/A
26	Satellite bypass pressure	PG-3	0-250 bar	160 bar	160 bar	N/A	N/A	N/A	N/A	N/A	N/A
27	Control pressure	PG-2	0-600 bar	N/A	N/A	N/A	N/A	N/A	N/A	60 bar	N/A
28	Travel drive pressure	PG-4	0-600 bar	N/A	N/A	N/A	N/A	N/A	N/A	0-380 bar	0-380 bar
29	Main conveyor pressure	PG-4	0-600 bar	N/A	N/A	N/A	N/A	N/A	N/A	315 bar	315 bar
30	Waste conveyor drive pressure	PG-4	0-600 bar	N/A	N/A	N/A	N/A	N/A	N/A	230 bar	315 bar
31	Waste conveyor U/P pressure	PG-3	0-250 bar	N/A	N/A	N/A	N/A	N/A	N/A	150 bar	N/A
32	Distributor drive pressure	PG-4	0-600 bar	N/A	N/A	N/A	N/A	N/A	N/A	230 bar	315 bar
33	Cutting chain drive pressure	PG-4	0-600 bar	N/A	N/A	N/A	N/A	N/A	N/A	350 bar	350 bar
34	Clutch pressure front	PG-5	0-30 bar	N/A	N/A	N/A	N/A	N/A	N/A	15 bar	15 bar
35	Clutch pressure rear	PG-5	0-30 bar	N/A	N/A	N/A	N/A	N/A	N/A	15 bar	15 bar
36	Chain guide left	PG-4	0-600 bar	N/A	N/A	N/A	N/A	N/A	N/A	140 bar	N/A
37	Chain guide left	PG-4	0-600 bar	N/A	N/A	N/A	N/A	N/A	N/A	140 bar	N/A
38	Rail clamp pressure	PG-3	0-250 bar	N/A	N/A	N/A	N/A	N/A	N/A	160 bar	N/A
39	Chain tension pressure	PG-3	0-250 bar	N/A	N/A	N/A	N/A	N/A	N/A	150 bar	N/A
40	Cutter bar lifting	PG-3	0-250 bar	N/A	N/A	N/A	N/A	N/A	N/A	160 bar	N/A
41	Cutter bar locking	PG-3	0-250 bar	N/A	N/A	N/A	N/A	N/A	N/A	160 bar	N/A
42	L/U up down	PG-3	0-250 bar	N/A	N/A	N/A	N/A	N/A	N/A	160 bar	N/A
43	Ac drive	PG-3	0-250 bar	N/A	N/A	N/A	N/A	N/A	N/A	120 bar	N/A
44	Screen unit vibration pressure	PG-4	0-600 bar	N/A	N/A	N/A	N/A	N/A	N/A	390 bar	350 bar
45	Screen tilting Pressure	PG-3	0-250 bar	N/A	N/A	N/A	N/A	N/A	N/A	140 bar	175 bar

SN	Parameter to be calibrated	Master Ref	Range of Master	CSM	09-3X	WST	UNI-2S	UNI-3S	DGS	BCM	FRM
46	Distributor conveyor in/out	PG-2	0-160 bar	N/A	N/A	N/A	N/A	N/A	N/A	50 bar	175 bar
47	Excavating conveyor pressure	PG-4	0-600 bar	N/A	N/A	N/A	N/A	N/A	N/A	N/A	315 bar
48	Hydraulic vertical load pressure	PG-2	0-160 bar	N/A	N/A	N/A	N/A	N/A	20-10 bar	N/A	N/A
49	Vibration pressure of vibration unit	PG-4	0-600 bar	N/A	N/A	N/A	N/A	N/A	350 bar	N/A	N/A
50	Pre load pressure	PG-2	0-160 bar	N/A	N/A	N/A	N/A	N/A	60 bar	N/A	N/A
51	Broom drive pressure	PG-3	0-250 bar	N/A	N/A	N/A	N/A	N/A	N/A	N/A	175 bar
(B) **Pneumatic System**											
52	Pneumatic system pressure	PG-1	0-10 bar	7 bar	7 bar	7 bar	7 bar	7 bar	7 bar	7 bar	7 bar
53	Pneumatic intermediate pressure	PG-1	0-10 bar	4 bar	4 bar	4 bar	4 bar	4 bar	4bar	5 bar	5 bar
54	Break pressure	PG-1	0-10 bar	3.8 bar	3.8 bar	3.8 bar	3.8 bar	3.8 bar	3.8 bar	3.8 bar	3.8 bar
55	Vertical preload pressure	PG-1	0-10 bar	2 bar	2 bar	2 bar	2 bar	2 bar	2 bar	N/A	N/A
56	Satellite brake pressure	PG-1	0-10 bar	2,5 & 5.5 bar	N/A	N/A	N/A	N/A	N/A	N/A	N/A
	Electronic System										
57	Cross level by front pendulum	MM-1	N/A	25 mv/mm	25 mv/mm	25 mv/mm	25 mv/mm	25 mv/mm	25 mv/mm	N/A	N/A
58	Cross level by middle pendulum	MM-1	N/A	25 mv/mm	25 mv/mm	25 mv/mm	25 mv/mm	25 mv/mm	25 mv/mm	N/A	N/A
59	Cross level by rear pendulum	MM-1	N/A	25 mv/mm	25 mv/mm	N/A	N/A	25 mv/mm	25 mv/mm	N/A	N/A
60	Height transducer value	MM-1	N/A	90 mv/mm	90 mv/mm	90 mv/mm	90 mv/mm	90 mv/mm	90 mv/mm	N/A	N/A
61	Super elevation value	MM-1	N/A	50 mv/mm	50 mv/mm	50 mv/mm	50 mv/mm	50 mv/mm	50 mv/mm	N/A	N/A
62	General lift value	MM-1	N/A	50 mv/mm	50 mv/mm	50 mv/mm	50 mv/mm	50 mv/mm	N/A	N/A	N/A
63	Versine value by lining transducer	MM-1	N/A	23.1 mv/mm	23.1 mv/mm	23.1 mv/mm	23.1 mv/mm	23.1 mv/mm	N/A	N/A	N/A
64	Versine value by measuring transducer	MM-1	N/A	23.1 mv/mm	23.1 mv/mm	23.1 mv/mm	23.1 mv/mm	23.1 mv/mm	N/A	N/A	N/A
65	Versine value by versine potentiometer	MM-1	N/A	50 mv/mm	50 mv/mm	50 mv/mm	50 mv/mm	50 mv/mm	N/A	N/A	N/A

SN	Parameter to be calibrated	Master Ref	Range of Master	CSM	09-3X	WST	UNI-2S	UNI-3S	DGS	BCM	FRM
66	Slew value by slew potentiometer	MM-1	N/A	50 mv/mm	50 mv/mm	50 mv/mm	50 mv/mm	50 mv/mm	N/A	N/A	N/A
67	Tamping depth value	MM-1	N/A	25 mv/mm	25 mv/mm	25 mv/mm	25 mv/mm	25 mv/mm	N/A	N/A	N/A
68	Engine oil pressure gauge (NTA)	PG-5	0-30 bar	N/A	0-10 bar	0-10 bar	0-10 bar	N/A	N/A	0-5 bar	N/A
69	Engine temp gauge (NTA)	T-1	40-120°C	N/A	40-120 degree C	40-120 degree C	40-12 degree C	N/A	N/A	40-120 degree C	N/A
70	Engine oil pressure gauge (KTA)	PG-5	0-30 bar	0-10 bar	0-10 bar	N/A	N/A	0-10 bar	0-10 bar	0-5 bar	0-10 bar
71	Engine temp gauge (KTA)	T-1	40-120°C	40-120 degree C	40-120 degree C	N/A	N/A	40-120 degree C	40-120 degree C	40-120 degree C	40-120 degree C
72	Vibration frequency	Tachome te1	0-9999 r.p.m.	2100	2100	2100	2100	2100	35 Hz	N/A	N/A
73	Engine RPM-1	Tachome te1	0-9999 r.p.m.	2100	2100	2100	2100	2100	2100	2200	2100
74	Engine RPM-2	Tachome te1	0-9999 r.p.m.	N/A	1800	N/A	N/A	N/A	N/A	2200	N/A
	Total no. of parameters			**37**	**46**	**33**	**28**	**29**	**23**	**32**	**22**
	Total no.of master required			**9**	**9**	**9**	**6**	**6**	**9**	**8**	**8**

Annexure 8.6

Format for Master Calibration

Code No.	Location	Custodian	Name Of Equipment / Device	Make / Model	Range	Least Count	Frequency Of Calibration	Calibration Agency Inside /Outside	Date Of Calibration	Next Due

Annexure 8.7

Format for Repair Summary sheet for POH

Machine no……. of…….. Railway, which arrived on ---------- at CPOH workshop……, was taken in hand for overhauling since ----------. The overhauling work has been completed on ----------, and test runs and tamping were carried out for ----- days/yet to be conducted. All performance indicators/gauges have been calibrated/yet to be calibrated from masters as per Annexure 8.5. The performance of the machine with regard to fitment of overhauled/new spares and all performance parameters have been found to be satisfactory. The performance of this machine has been checked by Shri ----------, in-charge. In case of any major failure within 6 months. Sri ---------- SSE/CPOH machine in-charge for overhauling at CPOH shall visit this machine. It will be the onus of officer in-charge of that machine, to timely intimate DY.CE/TMC/CPOH [+] for any such help. Performance pro-forma may please be sent back (duly filled up) after three months working. All testing of machine has been carried out as per entire satisfaction of Shri ---------- in his presence. Minor errors in the field of electrical/electronic/mechanical during stabilization period is expected. Adjustment/ re-calibration/replacement of small components to be carried out at field. CPOH/ALD will render all possible help wherever so required for any major failure.

1. **Details of POH:** Details of New / Repaired /Reused spares are as per checklist jointly signed by undersigned.
2. **Release materials:** Accountal of release material is as per checklist signed jointly.
3. Performance of following assemblies/spares are fixed on trial and its performance is required to be recorded and feedback must be sent to CPOH after three months.
4. List of missing spares of machine at the time of receipt of machine should be jointly signed.
5. Modification /Alteration /Deviation with original, carried out during POH should be jointly signed.
6. Special /Major repairs carried out during POH.

SSE/ In-charge of Machine **SSE/TMC/CPOH**

Annexure8.8

Format for 90 Days Feedback of POH

MACHINE TYPE AND NUMBER – _____

RAILWAYS - _____

DATE OF REPORT- _____

1-STATION:_____

2-DATE SENT FOR POH:_____

3-DATE HANDED OVER TO ZONAL RAILWAY AFTER POH:_____

2-DATE OF START OF UTILISATION AFTER POH: _____

3-TOTAL PROGRESS TILL DATE AFTER POH:_____KMS._____POINTS.

4- TOTAL DAYS MACHINE WORKED:_____

5- TOTAL DAYS BLOCK TAKEN:_____

6- TOTAL DAYS LOST DUE TO BREAKDOWN OF MACHINE:_____

S .No.	Section → Activity ↓	**Tamping unit Section**	**Lifting unit Section**	**Electronic**	**Gear Box**	**Wheel & Axle**	**Hydraulic**	**Pneumatic**	**Engine**	**General**
1	Total days lost due to breakdown assembly wise									
2	Total no of failures in block section									
3	Total time lost in block section (block time)									
4	No. of repeated failures									
5	Performance of assembly after 90 days working (fill 1,2,3,4 & 5 level of satisfaction)									

7- Status of Section Wise Performance During POH:

For Sl. No. 5 Only	5	4	3	2	1
	100%	**80%**	**60%**	**40%**	**Less than 20%**

8- Feed Back of Trial Items:

S. No	DESCRIPTION	PERFORMANCE		DATE OF FAILURE	BRIEF DETAILS ABOUT THE FAILURE
		Satisfactory	satisfactory		
1					
2					
3					
4					
5					

9. Details of major maintenance input given in last 90 days

10. Suggestions if any

CPOH Incharge **SSE/Machine Incharge**

Annexure 8.9

Typical Facilities to be provide in a Mobile Workshop

SN	Items	Quantity
1	Portable tent	1
2	Portable electric drill machine	1
3	Flexible shaft grinder	1
4	Bench grinder	1
5	DG set 10 KVA with welding plant	1
6	Gas cutting equipment	1
7	Work table -with bench vice	1
8	Tool kit	1
9	Lighting arrangement	1
10	First aid box	1
11	Heavy duty jacks, pullers, pushes up to 50 t capacity	1 set
12	Multimeter	1 set
13	Tachometer (contactless)	1
14	Small pay bars	2 sets
15	Temperature meter digital (non contact type)	1
16	Reamers	8
17	Seals installation kits	1 set
18	Bearing puller/pushers, presses	1 set
19	Accumulator pressure checking and filling device PC-250 complete	1 set
20	Wheel defect gauge	1
21	Torque wrenches	1 set
22	Magnetic base dial gauge	1
23	IC tester, relay tester, diode tester	1
24	O-ring cone	1
25	Gauge cum level	1
26	Pendulum calibration pads	1 set
27	Versine measuring chord	1
28	Go-NO-Go gauge for tamping tynes	1 set
29	Hydrometer	1
30	Set of masters required for machine calibration	01 set
31	Off line filtration unit with contamination sensor	01 set
32	Z.F. hydraulic test kit	01 set
33	Temperature gauge (Non contact type)	01 set
34	D spanner and ring spanner set	01 set
35	Vernier calipers, micrometers and bore gauge	01 set
36	Hot air blower	01 Nos
37	Chain pulley 2 t block	01 Nos
38	8mm wire rope sling	01 No
39	Wooden block	10 Nos.

Annexure 8.10

List of Equipment to be kept in Camp Coach Workshop

SN	Items	Quantity
1	Welding plant	1
2	Bench grinder	1
3	Bench vice and a work table	1
4	Portable drill machine	1
5	Tool kit	1
6	Portable filter	1
7	Portable crimping machine	1
8	Heavy duty jacks, pullers, pushers up to 50 t capacity	1 Set
9	Hot air blowers	1
10	Multimeter	1
11	Accumulator pressure checking and filling device PC-250 complete	1 set
12	Torque wrench	1 Set
13	Versine measuring chord	1
14	Go-NO-Go gauge for tamping tynes	1
15	Steel scale 1" to 6"	1 Set
16	Taper gauge up to 1"	1
17	Feeler gauge	1
18	Thread gauge	1
19	Cell tester (battery voltage)	1
20	Battery charger	1
21	Inverter 1000 VA/roof mounted with solar inverter	1
22	Vernier caliper and normal calipers	1 set

Annexure 8.11

Typical Layout of Track Machine Siding

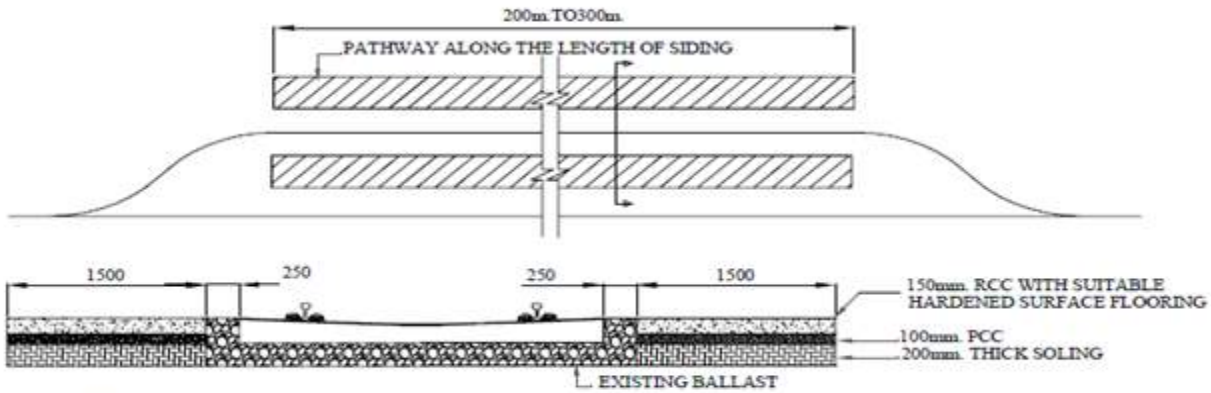

NOTE:-

1. ALL DIMENSIONS ARE IN MILLIMETERS .
2. LENGTH OF SIDING SHOULD PREFERABLY BE OF 300m, AND IN NO CASE IT SHOULD BE LESS THAN 200m.
3. PATHWAY PREFERABLY OF1500mm. WIDTH SHOULD BE PROVIDED ON BOTH SIDE OF SIDING. IN NO CASE IT SHOULD BE LESS THAN 1000mm.WIDTH.
4. AN ALL WEATHER APPROACH ROAD UP TO SIDING PATHWAY MUST BE PROVIDED TO CARRY HEAVY EQUIPMENT , FUEL DRUMS ETC.
5. ADEQUATE WATER CONNECTION AND LIGHTING TO BE PROVIDED.
6. ELECTRIC CONNECTION TO BE PROVIDED FOR BATTERY CHARGING, LIGHTING IN COACHES AND WELDING (3 PHASE CONNECTION) TO CARRY OUT MINOR REPAIR SHOULD ALSO BE PROVIDED.
7. TOILET TO BE PROVIDED WHERE THERE IS NO TRACK MACHINE STAFF REST ROOM.
8. MINOR CHANGES IN THE LAY OUT NECESSARY AS PER LOCAL REQUIREMENT MAY BE CARRIED OUT WITH THE APPROVAL OF PRINCIPAL CHIEF ENGINEER.

9. **Roofing over 25m length to be provided full width of pathway**

Annexure 8.12

GENERAL LAYOUT OF REST ROOM FOR TRACK MACHINE STAFF.

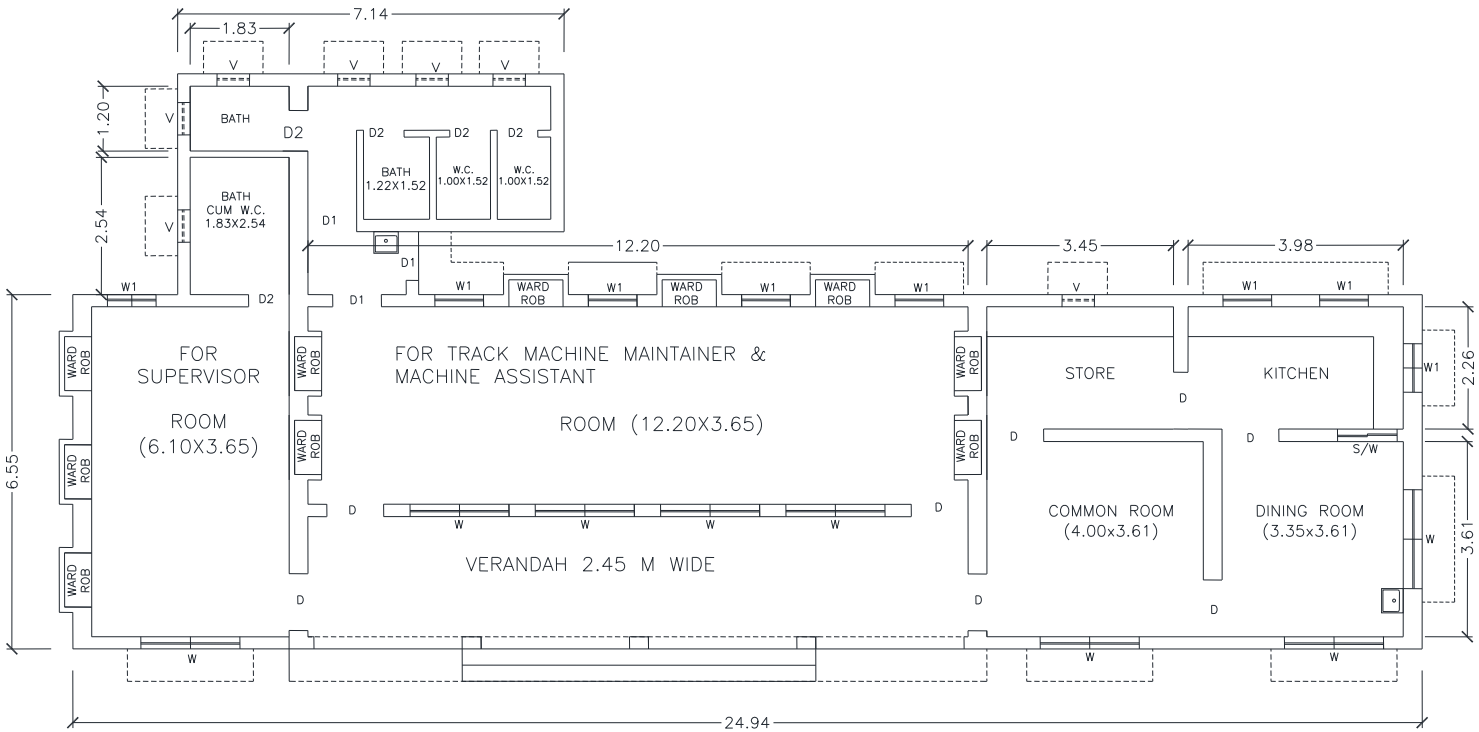

SCHEDULE OF DOORS & WINDOWS		
SN.	TYPE	SIZE
1.	DOOR (D)	1.05X2.10
2.	DOOR (D1)	0.90x2.10
3.	DOOR (D2)	0.75x2.10
4.	WINDOW (W)	1.83x1.20
5.	WINDOW (W1)	0.90x1.20
6.	VENTILATOR (V)	0.60x0.70

NOTE:–
1. ALL DIMENSIONS ARE IN METRES.
2. MINOR CHANGES IN THE LAYOUT NECESSARY AS PER LOCAL REQUIREMENT MAY BE CARRIED OUT WITH THE APPROVAL OF PRINCIPAL CHIEF ENGINEER.
3. BUILDING CONSTRUCTION, IT'S FINISHING AND FACILITIES TO BE PROVIDED AS PROVIDED IN LOCO DRIVER'S RUNNING ROOM.

Annexure 8.13

Layout of Camping Coach(Based on RDSO Drawing no.CSC-1592

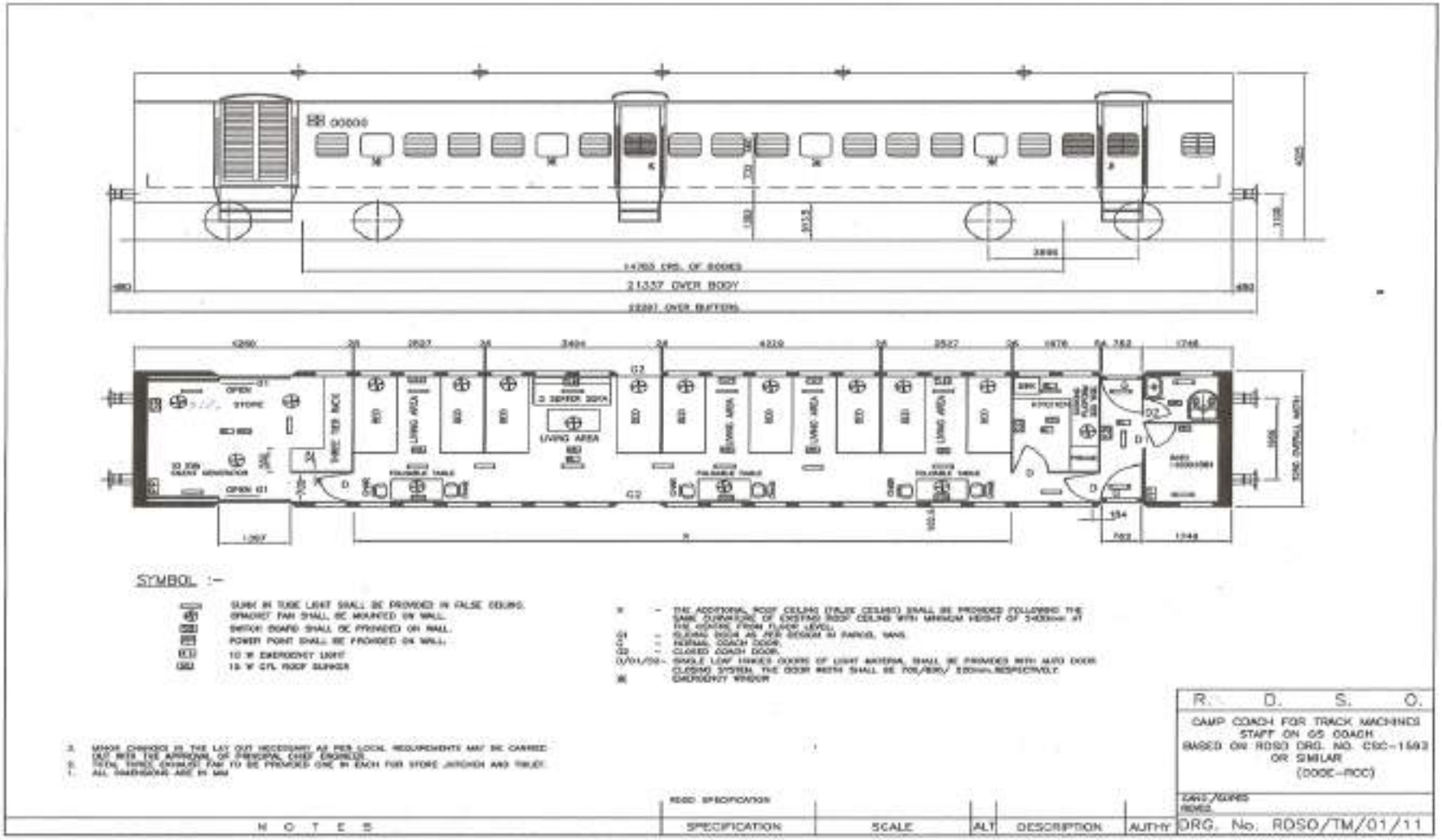

Annexure 8.14

Layout of Camping Coach(Based on RDSO Drawing no.CSC-1640)

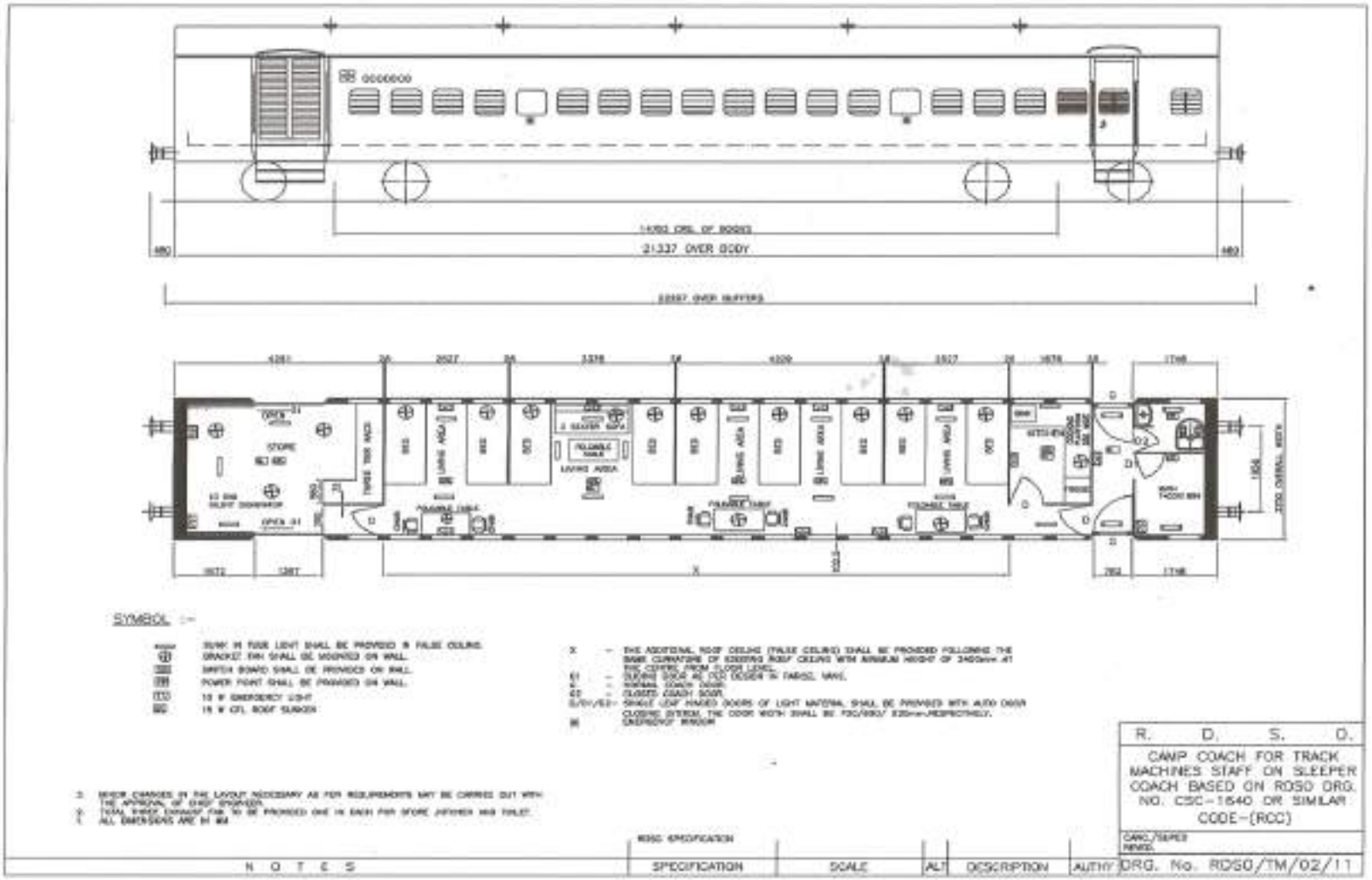

Annexure 8.15

Layout of Camping Coach(Based on RDSO Drawing no.CSC-1686)

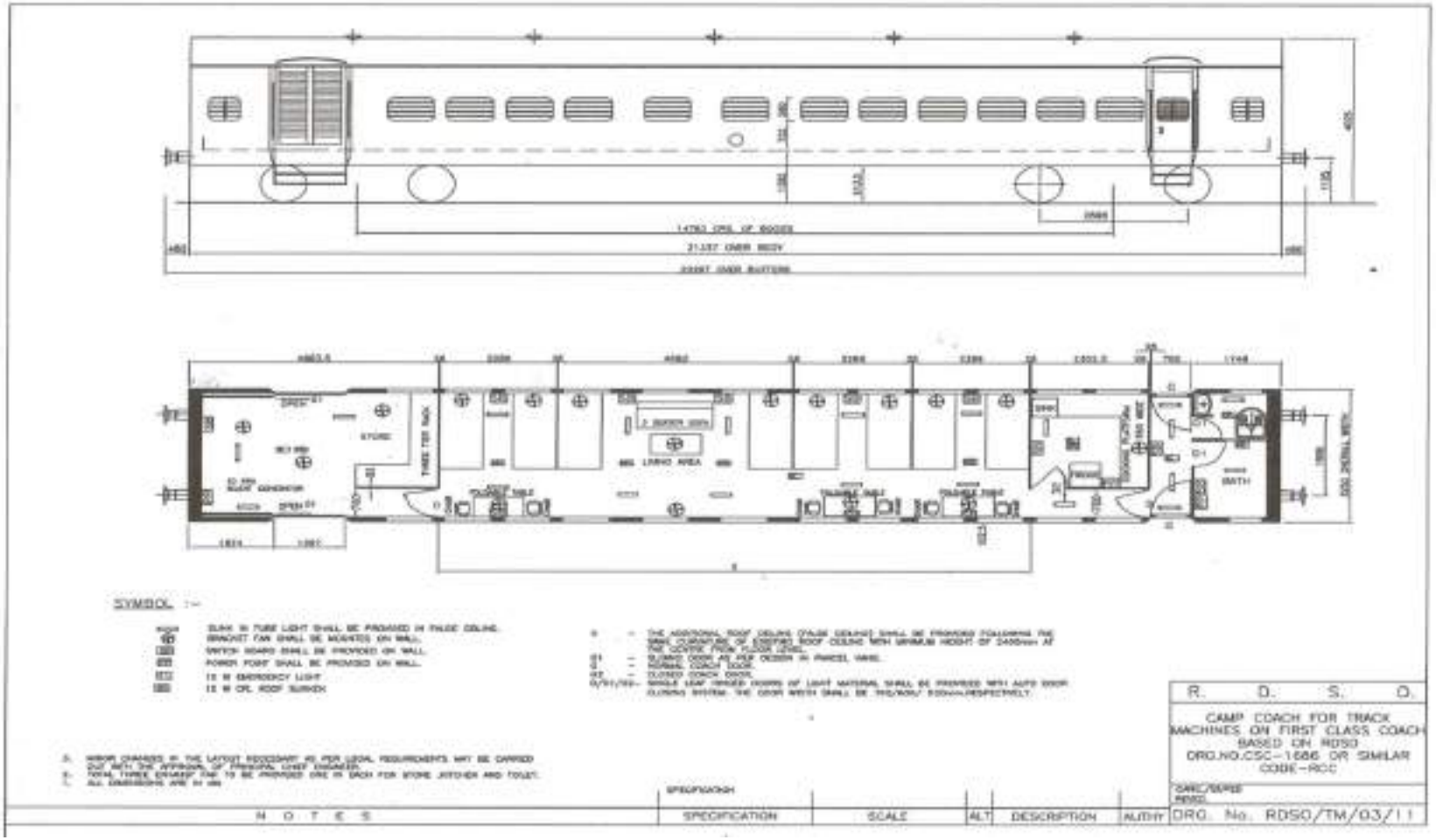

Annexure 8.16

Amenities to be provided in Camping Coaches

S.No	Name of Item	Qty.
A.	**Kitchen Area**	
1	Fire extinguisher	02 nos.
2	Commercial gas connection with double cylinder	01 set
3	Four burner LPG gas stove	01no.
4	RO+UV water purifier	01 no.
5	Refrigerator-210 l capacity	01 no.
6	Dinner set	01 no.
7	Thermos 02 l capacity	02 nos.
8	Gas lighter	02 nos.
9	Presser cooker 5 l capacity	01 no.
10	Presser cooker 3 l capacity	01 no.
11	Casserole 10" dia.	04 nos.
12	Bhagona copper base as per required sizes	04 nos.
13	Plate steel 12" dia.	10 nos.
14	Kadahee	02 nos.
15	Spatula (karchhul) of various sizes	03 nos.
16	Service spoon big	03 nos.
17	Service spoon small	03 nos.
18	Service bowl big	03 nos.
19	Gripper	02 nos.
20	Tea mug	12nos.
21	Stainless steel spice box	01 no.
22	Stainless steel container 2 l	06 nos.
23	Stainless steel container for floor 15 l	01 no.
24	Stainless steel container for rice 15 l	01 no.
25	Stainless steel container for water 20 l	01 no.
26	Stainless steel bucket 15 l	01 no.
27	Hot chapatti case	02 nos.
28	Sink	01 no.
29	Stool for work	02 nos.
30	Tea set	01 no.
31	Tea strainer (stainless steel)-4"	01 no.
32	Teaspoon	12 nos.
33	Stainless steel utensil stand (wall hanging)	01 no.
34	Stainless steel sauce-pan (copper base) 1 l	01 no.
35	Hot plate iron (tawa) -12"with handle	01 no.
36	Pastry board (chakla) 10"	01 no.
37	Pastry roller (belna)	01 no.
38	Fridge water bottle·1 l	6 no.
39	Dustbin	01 no.

SL.NO.	DESCRIPTION	QUANTITY
B.	**LIVING AREA**	
1.	LCD/LED television 28".	01 no.
2.	Satellite antenna for TV (DTH)	01 no.
3.	230VAC desert cooler or	4 nos.
	1 ton AC unit	3 nos.
4.	Laptop	01 no.
5.	Foldable tubular chairs	06 nos.
6.	Folding tables 1000x500 mm.	03 nos
7.	Wooden centre Table 1000X500 mm.	01 no.
8.	Radio/audio player	01 no.
9.	Pillow Durafoam/Sleepwell	10 nos.
10.	Pillow cover	20 nos
11.	Curtain	One each window
12.	Bed sheets (single bed}	20 nos.
13.	Mosquito net	10 nos.
14.	Woolen blanket (Raymond)	10 nos.
15.	Sofa	One 3 seater as per the space available
16.	Insulated water jug 10 l capacity	02 nos.
C.	**BATH AREA**	
1.	Geyser 20 l capacity	01 no.
2.	Bucket 20 l capacity	06 nos.
3.	Mug	02 nos.
4.	Aluminium/stainless steel stool	02 nos.
D.	**STORE**	
1.	Welding set 5 kva	01 no.
2.	Water lifting pump	02 nos.·
3.	Portable drilling machine	01 no.
4.	Portable grinding machine	01 no.·
5.	Diesel filling pump '	01 no.
6.	Silent DG set 10 kva	01 no.
7.	Folding cot (single bed)	06 no

ANNEXURE 8.17

Paint Scheme for Camping Coach

(Paint scheme for Camp Coach)		
1	Grid blasting	One time
2	Isophthalic putty	One Coat
3	Primer red oxide zinc chromate to IS 2074	One Coat
4	Filler gray to IS 110	One Coat
5	Knifing stopper (putty) to IS 5083	One time
6	Wet rubbing	One Coat
7	Knifing stopper (putty) to IS 5083	One job
8	Wet rubbing	One job
9	Necessary putty	One job
10	Wet rubbing	One job
11	Filler gray IS 110	One Coat
12	Dry rubbing	One job
13	Under coat synthetic enamel IS 8662	One Coat
14	Dry rubbing	One job
15	Finish coat, synthetic enamel to IS 8662	One Coat
16	Glaze coat (1:1 mixture of synthetic enamel to IS 8662& synthetic clear varnish to IS :524	One Coat
17	Lettering	One job

Annexure 8.18

Electric Circuit Diagram of Camping Coach

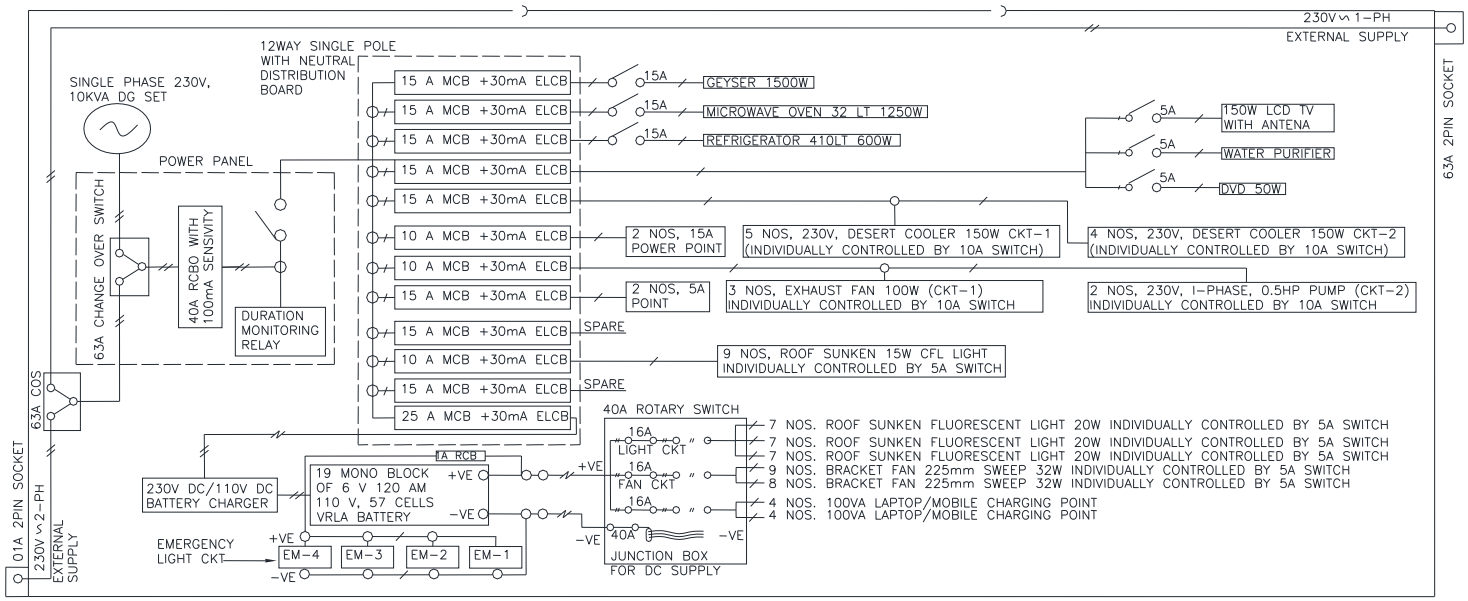

NOTE–

1. COACH BODY TO BOGIE, BOGIE TO AXLE AND EACH ELECTRICAL EQUIPMENT SHALL BE SOLIDLY EARTH AT MINIMUM TWO POINTS.
2. 230V, 3 PINS /15A PLUG WITH SWITCH OF APPROVED MAKE(ICF/RCF) SHALL BE USED.
3. 230V. CABLES IN SUPER STRUCTURE AND UNDER FRAME SHALL BE LAID IN FLEXIBLE POLY AMIDE CONDUITS. POLY AMIDE CONDUITS AND ITS ACCESSORIES SHALL BE AS PER RDSO SPECIFICATION NO. RDSO/PE/SPEC/AC/0138-2009(REV-0)
4. DISTRIBUTION BOX AS IN AC COACH SHALL BE PROVIDED IN PLACE OF EXISTING DISTRIBUTION FUSE BOARD, SO THAT 230V AC AND 110V DC WIRING CAN BE DONE.
5. SYSTEM SPECIFICATION AND CODE OF PRACTICE FOR WIRING FOR 110V DC SELF GENERATION TRAIN LIGHTING SYSTEM NO.EL/TL/48-2005(REV-1) AND CODE OF PRACTICE FOR TRAIN LIGHTING MAINTENANCE ON PREVENTION OF FIRE NO. EL/TL/56/SHALLBE STRICTLY FOLLOWED FOR COACH WIRING.
6. CODE OF PRACTICE FOR PREVENTION OF FIRE IN AC COACHES RDSO/PE/O/0008-2005(REV-0) FOR 230V. WIRING SHALL BE FOLLOWED FOR COACH WIRING.
7. ALL CABLES ARE OF THIN WALLED FLEXIBLE SINGLE CORE E-BEAM WITH COPPER CONDUCT AS PER RDSO SPECIFICATION NO. ELRS/SPEC/ELC/0019 OF FEB-2011.
8. 110V DC WIRING SHALL BE CARRIED IN UNDER FRAME IN GALVANIZED RIGID STEEL CONDUITS AS PER IS: 9537-PART-2.
9. INSULATION MONITORING RELAY(IMR) OF SUITABLE RATING AND APPROVED MAKE(ICF/RCF) SHALL BE PROVIDED.
10. NO PROTECTION DEVICE LIKE (MCB CUM ELCB)/RCBO AND IMR SHALL BE BYPASSED IN ANY CONDITION.
11. ALL ELECTRICAL APPLIANCES OF REPUTED MAKE SHALL BE PROVIDED.
12. NO HEATER/ROOM HEATER TO BE CONNECTED IN ANY POWER POINT.
13. DG SET AS WELL AS COACH PANEL SHALL BE OPERATED BY A QUALIFIED ELECTRICIAN.
14. 4 NO. DCP TYPE FIRE EXTINGUISHERS TO BE PROVIDED IN CAMPING COACH.

CABLE CHART

E-BEAM SPECIFICATION NO. ELRS/SPEC/ELC/0019 OF FEB 2011		
CABLE SIZE	2.5 SQ.MM	4 SQ.MM
SYMBOL		

REF:EL/6.9.12/SYSTEM		SCALE: NTS	APPROVED BY:	(FOR DG)
GENERAL SCHEMATIC SINGLE LINE WIRING DIAGRAM FOR CONVERSION OF CS,SCN AND FIRST CLASS NON-AC COACHES INTO CAMPING COACH (WITH 10KVA DG SET, 230V AC SUPPLY AND 110V DC SUPPLY)				SD
				SUPERSEDES
RDSO/PE/SK/TL/0161-2011(REV-0)				SUPERSEDED BY

CHAPTER 9

MANPOWER

901 General - Manpower is the most precious and important resource for operation and maintenance of track machines. Skilled and trained manpower is required to man sophisticated track machines for their optimal utilization.

902 Requirement of Manpower

(1) The scale of man power requirement for machine working is fixed for following activities:

(a) Field operation & maintenance.

(b) Field supervision, technical and general services including repairs and maintenance – at satellite depot and/or for fleet of machines.

(c) Repair and maintenance – at zonal depot.

(d) Repair & maintenance for POH – CPOH workshop.

(2) The scale of manpower for activities (a), (b) & (c) above is given in **Annexure 9.1.** Scale of manpower for CPOH workshop is given in **Annexure 9.2.**

(3) While scale of manpower for activity (a) above has been laid down for each type of machine separately, scales for other activities i.e. (b), (c) and (d) have been laid down based on track machine holding in terms of machine units. Track machine holding is computed by multiplying number of machines by weightage factors for each type of machines, as given in **Annexure 9.1.**

(4) As specified in **Chapter 8**, the POH of the machines may be carried out either at nominated CPOH workshops, or by entering into a contract with the manufacturer or authorized service agents or the combination of the two.

(5) It should be the endeavour of railways to ensure manning as per prescribed scale to ensure optimal utilization of machines.

(6) Creation of additional manpower, based on scale, commensurate with projected machine holding should be an annual exercise to ensure commissioning and deployment of new machine immediately upon receipt on Zonal Railways.

903 Training - Training of officers, supervisors and skilled as well as unskilled staff is essential and important for proper operation and maintenance of modern and sophisticated track machines.

(1) Officers- They shall undergo training course at IRICEN/Pune & IRTMTC as a part of the initial training. In addition, officers working in track machine organization shall undergo special courses on track machines conducted from time to time by IRICEN, IRTMTC and OEMs. They shall also be exposed to facilities available with OEMs in India as well as abroad. All officers shall be

imparted hands-on training to learn basic operations of track machine at IRTMTC and Zonal Railways.

(2) **SSE/JE/TM(s)-**They shall undergo initial course at the time of joining or after empanelment for the post of JE/TM from MCM/TMM as the case may be. Thereafter, they shall undergo refresher course once in 3 years at IRTMTC. For knowledge relating to the operation and safety of working in the field, they shall take G&SR courses at zonal training centres initially and refresher courses once in 3 years. Training facilities with OEMs and manufacturers in India as well abroad shall also be organized. They shall also be imparted training by organising special courses including that of establishment from time to time. New appointees should be exposed to all types of machines available on the zonal railway as a part of their field attachment.

(3) **Technical Staff**- All MCMs & TMMs working in the track machines organization shall undergo regular courses designed for different categories at IRTMTC/Allahabad and field training as specified. They shall undergo refresher courses at IRTMTC every 5 years.

(4) **Machine Assistant**- Those joining railway services directly (entry through RRCs) shall be given 2 weeks training on the lines similar to that of trackman. Suitable course plan shall be devised with liberal use of **videos** showing working of track machines and safety aspects.

904 **Roster -** Dynamic working roster has to be followed for working of track machines in the field, based on availability of traffic blocks and requirements of the work site. The guiding principle shall be optimal utilization of machines and fixing the working hours of machine staff accordingly with the aim to keep the overall working time within prescribed duty hours as far as possible. Weekly or 3 weeks roster may be followed as per the requirement of the railway.

(1) **Weekly Roster**- Roster of the staff working in track machine organization falls under continuous classification as per HOER. The staff is rostered to work for a period of 6 days at a stretch followed by one day of rest. In respect to over time, the staff will be governed by extant instructions under HOER in regard to the principle of averaging.

(2) **Three Weeks Roster-** Staff working on track machines may be rostered to work for a period of 3 weeks at a stretch followed by continuous rest for a period of one week at headquarters. The three weeks continuous roster will include the actual period of journey under taken from head quarters to the place of work and back. The individuals shall not be employed for more than 12 hours on any day. In respect to over time, the staff will be governed by extant instructions under HOER in regard to the principle of averaging as applicable to 3 weeks roster. The implementation of three weeks roster shall be governed by exemption communicated by Railway Board from provisions of Railway Act 1989 from time to time.

(3) **Duty Hours for Field -**The actual roster duty hours (timings) for staff working on

various track machines in the field shall be decided by the Senior Divisional Engineer/Divisional Engineer; considering availability of traffic blocks/corridor blocks over the sections where the machines are deployed. The record of duty hours shall be maintained by engineering control and shall be conveyed to machine staff.

(4) **Duty Hours for CPOH Depot, Zonal Depot & Satellite Depot -** SSE/JE/TMs and other staff working in CPOH Depot, Zonal Depot & Satellite depot, shall have weekly roster only.

(5) **Duty Hours for HQ Office & Control –**SSE/JE/TMs and other staff working in HQ office, in HQ control, zonal depot control and satellite depot control shall follow the working system of the respective offices/depot.

Annexure 9.1

Weightage Factors for Track Machines and Yardsticks for Staff

(1) Weightage Factors (Units) for Track Machines

S.No.	Type of Machine	Weightage Factor
1	Tampers, Dynamic Track Stabilizer, Points & Crossing Laying	1.0
2	Mobile Flash Butt Welding Plant	1.0
3	Tamping Express Dynamic	1.5
4	Ballast Regulator/ Utility Vehicle (Self Propelled), RBMV	0.8
5	Ballast Cleaning Machine and Shoulder Ballast Cleaning	1.5
6	HOBCM (RM900) and HOSBCM	1.75
7	Track Relaying Train	3.0
8	Portal Crane, Muck Disposal Unit/ Tie Crane/ Rail threader	0.5
9	Rail Inspection Vehicle	0.8
10	Rail Grinding Machine (16 stones/08 stones) and Switch Rail	1.0
11	Rail Grinding Machine (72 stones)	4.5
12	Rail Grinding Machine (96 stones)	4.75

(2) Scale of Manpower for Field Operation & Maintenance:

Scale of field operation staff for each type of machine per shift is given in the following table:

S.No	Name of Machine	SSE(TM)/ JE(TM)	Track Machine Maintainers (TMM)	Machine Assistant (MA)	Cook	Total (Excluding Cook)
1	Plain Track Tamper (DUO/Worksite & CSM)	2	3	3	1	8
2	Mobile Flash Butt Welding Plant	2	3	3	Nil	8
3	Tamping Express (09-3X-CSM)	2	4	4	1	10
4	Tamping Express Dynamic	2	5	6	1	13
5	P&C Tamper (UNIMAT)/ Multipurpose Tamper	3	3	3	1	9
6	Dynamic Track Stabilizer	2	2	2	Nil	6
7	Ballast Cleaning Machines	3	3	4	1	10
8	HOBCM (RM900)	3	4	6	1	13

9	Shoulder Ballast Cleaning Machine	3	3	4	1	10
10	HOSBCM	3	4	6	1	13
11	Ballast Regulating Machine	2	2	3	1	7
12	Track Relaying Train	6	8	14	2	28
13	Portal Crane (one No.)/ Spoil Disposal Unit/ Tie Crane/ Tie Exchanger / Rail Lifting Units/Rail Cum Road Vehicles	1	1	1	1 Per set of Portals (2 or 3 Nos.) for TLE and	3
14	P&C laying Machine (Two T- 28 Cranes + one Jib Crane)	3	3	3	1 per Set of 2 T-28 & 1 jib crane	9
15	Utility Vehicle (Self Propelled), Rail Borne Maintenance Vehicle.	2	2	3	1	7
16	Rail Inspection Vehicle	2	1	2	Nil	5
17	Rail Grinding Machine (16 stones/08 stones)	3	4	3	1	10
18	Switch Rail Grinding Machine (20 stones)	3	4	5	1	12
19	Rail Grinding Machine (72 stones)	10	12	12	2	34
20	Rail Grinding Machine (96 stones)	10	14	14	2	38

(3) Scale of Staff for Field Supervision, Technical & General Services for Satellite Depot

(a) Gazetted Posts

(i) Junior scale/ senior scale posts for field supervision:

- One post of junior/senior scale for each division for holding up to 12 machine units,
- Two officers posts i.e. one senior scale and one junior scale are to be provided for divisions with more than 12 (twelve) units of track machines.

(b) Non-Gazetted Posts - Staff requirement for field supervision, technical and general services including repair and maintenance shall be worked out on the following scale for a set of six track machine units or part thereof in each division/satellite depot. Additional posts required in

satellite depot are mentioned in the note below the table.

S.No	Category	Nos.
1	SSE/JE/TM(s)	2
2	MCMs &TMMs	3
3	Track Machine Assistants	3
4	Store Clerk/ Material chaser	1
	Total* (for a set of 6 Track Machine Units)	9

* *In addition* one *SSE/JE/TM shall be provided in to assist Engineering control for monitoring and feeding of track machines progress in each satellite depot.*

***In addition, minimum one Post of Sr. Loco Inspector/Loco Inspector shall be provided in each division for monitoring the staff working on track machines. Additional post of LI can be considered for a division having strength of SSE/JE/TMs of more than 40.*

(4) Scale of Staff for Repairs and Maintenance for Zonal Depot

The scale of staff for repairs and maintenance in zonal depots excluding POH is as under

(a) Gazetted Posts- Yardstick for junior scale, senior scale and junior administrative grade posts is as below.

SN	Category	Junior Scale	Senior Scale	Junior Administrative Grade
1	Up to 24 Units of TMs	0	1	1
2	24 to 50 Units of TMs	0	1	1
3	50 to 75 Units of TMs	1	1	1
4	75 Units of TMs and above	1	2	1

(b) Non–Gazetted Posts – Additional posts required in zonal depot and HQ are mentioned in the note below the table.

S.No	Category	Machine units > 75	50 to 75 machine units	24 to 50 machine units	Up to 24 machine units
1	Track Machine supervisors SSE (/JE/TM(s)	18	15	11	6
2	MCMs & Track machine maintainers (TMMs)	42	38	26	15
3	Track Machine Assistants	40	33	23	13

4	OS	1	1	1	1
5	Draftsman	1	1	1	1
6	Steno		2	1	1
7	DSK	1	1	1	1
8	Material Chaser	4	3	2	2
9	Watchmen	**2**	**2**	**2**	**2**
10	Store Clerk	1	1	1	1
11	Personnel clerk	1	1	1	1
	Total*	**111**	**98**	**70**	**44**

* *In addition 3 SSE/JE(TM) shall be provided for round the clock functioning of control office in each zonal depot as well as HQ office of the railway –* ***total 6 SSE/JE/TM per Zone***

Notes for Para (2), (3) & (4):

(i) Weightage factors as per para (1) shall be applied and units of track machines calculated by multiplying number of each type of track machine with the weightage factor.

(ii) Posts of SSE/TM, JE/TM, MCM, TMM and MA shall be operated as cadre posts and the post of cook shall be operated as ex-cadre.

(iii) The requirement of a cook for DTS shall be met with out of the provision made for the machine to which these machines are attached.

(iv) For all the above categories, additional requirements of leave reserve (LR) @ 12.5%, rest giver (RG) @ 47% (for 3 weeks roster) and @ 16.5% (for weekly roster) & trainee reserve @ 4% shall be considered to work out total requirement. Satellite and zonal depot shall have 7 days working and RG shall be considered for these also.

(v) Distribution and designation of individual posts in various categories shall be based on restructuring formulae and percentage distribution of various types of grades applicable from time to time.

(vi) The nomenclature of track machine maintainer covers all types of artisan staff required for operation and maintenance of machine.

Annexure 9.2

Scale of Staff for Repairs and Maintenance for POH - CPOH Workshop

The scale of staff for repairs and maintenance for POH in CPOH work shop is as under

(1) Gazetted Posts

Asst. Scale, Senior Scale and JA Grade posts for CPOH work shop: Yards tick for this category of posts is as below:

Category	JA Grade	Sr.Scale	Jr. Scale
24 TMU per year	1	1	2
50 TMU per year	1	2	3

(2) Non- Gazetted Posts

Details of Non Gazetted staff for CPOH required in 24 TMU and 200 tamping unit and 50 TMU and 200 tamping unit are given in **Annexure 9.3 and 9.4**

Annexure 9.3

Man Power for POH of 24 Track Machine Units and 200 Tamping Banks

SN	Section	SSE	JE	Technician	Helper	OS/Clerk	Total
1	Electronics section including repair of panels, pendulum, transducers and PCBs etc.	1	-	4	3	-	8
2	Electrical section for repairing of lights, self starters, alternators, battery section and testing etc.	1	-	4	3	-	8
3	Hyd. pump, motors & valves	1	-	2	5	-	8
4	Hydraulic hoses	-	1	2	5	-	8
5	Z.F. and other gear box section	-	1	2	5	-	8
6	Lifting unit	1	1	2	4	-	8
7	Pneumatic valves	-	-	2	3	-	5
8	Maintenance of plant machinery	-	-	2	4	-	6
9	Quality control cell	1	-	1	3	-	5
10	Tamping bank overhauling section	1	-	2	2	-	5
11	Machine shop	-	-	2	3	-	5
12	Drawing & design	1		-	1	-	2
13	Testing & calibration	1	1	4	6	-	12
14	Material management including store handling	1	1	-	4	-	6
15	Office	-	-	-	2	6	8
16	Post POH site attention group	-	1	4	4	-	9
	Total	**9**	**6**	**33**	**57**	**6**	**111**

Annexure 9.4

Man Power for POH of 50 Track Machine Units and 200 Tamping Banks

S.No	Section	SSE	JE	Technician	Helper	OS/ Clerk	Total
1	Electronics section including repair of panels, pendulum, transducers and PCBs etc.	1	1	6	6	-	14
2	Electrical section for repairing of lights, self starters, alternators, battery section and testing etc.	1	-	6	6	-	13
3	Hyd. pump, motors & valves	1	-	4	7	-	12
4	Hydraulic hoses	-	1	4	8	-	13
5	Z.F. and other gear box section	2	1	3	5	-	11
6	Lifting unit	-	-	4	6	-	10
7	Pneumatic valves	-	-	4	6	-	10
8	Maintenance of plant & machinery	1	-	4	5	-	10
9	Quality control cell	1	-	2	3	-	6
10	Tamping bank overhauling section	1	-	2	2	-	5
11	Machine shop	-	-	4	4	-	8
12	Drawing & design	1	1	-	1	-	3
13	Testing & calibration	2	1	6	8	-	17
14	Material management including store handling	2	1	-	7	-	10
15	Office	-	-	-	4	6	10
16	Post POH site attention group	1	1	6	6	-	14
	Total	**14**	**7**	**55**	**84**	**6**	**166**

CHAPTER 10

STORES AND CONTRACTS

1001 Store Depot - Track machines of different types and models equipped with complex mechanical, hydraulic, pneumatic electrical and electronic systems have very large number of spares parts. An attached well-organized store depot is necessary for smooth functioning of the Zonal Machine Depot (ZMD) as well Satellite Depot (SD). It is desirable to have web based store management system.

(1) Zonal store depot shall be under the charge of SSE/TM/ZDI assisted by DSK and a store clerk. Zonal depot shall be the main depot for stocking of consumables, spares and unit assemblies. Diesel is generally arranged and managed by the division.

(2) Stores depot attached with Satellite Depot shall be under the charge of SSE/TM/SDI assisted by stores clerk and shall be for stocking of essential spares and consumables. Adequate inventory of items should be available at satellite depot for about one month consumption for carrying out various maintenance schedules of machines working under the jurisdiction of satellite depot. Apart from the above, critical emergency spares of engines, tamping units, and heavy mechanical items of various machines are also important for expeditious attention to machines. The scale of spares at SD shall be fixed by Zonal Railway taking into consideration the geographical locations and convenience of transport from ZMD.

(3) Camping coach of each machine should have stock of consumables required for day to day maintenance of the machine.

1002 Inventory Control

(1) Pricing of Items and Consumption

SSE/ZDI shall maintain record of spares and consumables procured for different machines and their normal annual consumption. SSE/ZDI should maintain close liaison with the SSE/ZD and/or DSK to ensure that pricing of the materials is done correctly and that the prices are revised to keep them current from time to time. This will ensure “cost consciousness” on the part of the supervisors. Upon operationalization of all modules of TMS, the rates shall be updated automatically from procurement module.

(2) Estimated Annual Requirements - The stock position, consumption trends and the estimated annual requirements should be reviewed periodically by AEN/XEN/ZD and estimated Annual Requirement shall be reviewed regularly.

(3) Fast Moving Items - Fast moving items are those spares or consumables, which are required to be issued frequently. Any item requiring issue more than once in a week in ZMD regularly in last 6 months period can be termed as fast moving. A list of fast moving spares should be prepared by the officer in-charge of the Zonal Depot as per following proforma-

S.No	Date	Items Required	Stock Position in Stores	Remarks

A monthly review of the consumption of fast moving items should be done at the zonal depot level. SSE/TM/ZD should maintain a record in which he should enter the stock position of materials affecting day-to-day working. This record will help the officer in-charge to pinpoint the items to be dealt on priority.

(4) Inactive Items

(a) Dead storage items should be segregated i.e. items, which are not at all required in the foreseeable future due to obsolescence, change in design etc. Such items may be circulated to other zonal railways twice or kept on web based software in surplus list for a period of one year. In case there are no takers, these items should be put up before the survey committee and suitably disposed off following the provisions of stores code. Items, which are damaged due to storage, handling etc. should also be surveyed and suitably disposed off according to the recommendations of the survey committee as per the provision of store code.

(b) Items, which are not likely to be required in the near future on the railway, should be offered to other railways and CPOH workshops.

(c) Every endeavour should be made by the AEN/XEN/ZMD to utilize the existing stock by making suitable modifications to the extent possible.

(5) Control over consumption - The officer in-charge of the zonal depot should identify and list out specific items other than those required in periodical maintenance schedules, for replacement of which the machine in-charge (SSE/JE/TM) will seek approval from the SSE/TM/ZMDI or SSE/TM/SDI; depending on under whose control the machine is repaired. He will personally check the item before authorizing such replacement.

(6) Recoupment of Stock - The action for recoupment of an item should be initiated keeping in view the lead period so as to have one year's requirement in stock. Whenever procurement action is initiated, the following shall be ensured:

(a) That the estimated annual requirement is worked out based on past three years' consumption. For the items for which last three years consumption is not available, manufacturer's recommendation or data from other railways can be considered to arrive at the figure of average annual consumption.

(b) That subsequent to a design change or modification done since the time of last review, no obsolescence of the product has resulted.

(c) Selective procurement possible in times of financial stringency, based on realistic technical appreciation of the requirements.

(d) For proprietary items, necessary proprietary article certificate duly signed by the competent authority shall accompany the indents.

(e) Wherever required, indents shall be accompanied by detailed specifications; drawings and list of firms duly approved by the competent authority.

1003 Procurement of Consumables, Components and Spares

(1) **Purchase Powers -** The officers of Engineering Department, dealing with track machines at HQ as well as in Zonal and Satellite Depot, shall have the powers to procure spares, consumables and small tools to meet the requirements of track machines, as available to the officers of Stores Department in corresponding posts (PCE equivalent to COS, CE/TM equivalent to CMM, Dy. CE equivalent to Dy. COS and XEN/TM equivalent to SSO).

(2) **Purchase Rules -** All rules and procedures as laid down for procurement by the Stores Department, shall be followed by Engineering Department while exercising powers as per sub-para (a) above.

(3) **Tender Committee -** The Tender Committee, wherever necessary, may be constituted with the Engineering Officers of appropriate level as a convener and the other members from Finance and Stores as per the schedule of powers delegated on the Zonal Railways.

(4) **Imprest -** Imprest available with track machine officials may also be utilized for procurement of spares, consumables and small tools to meet specific requirements of track machines.

1004 **Sourcing of Components & Spares and Procurement Procedure -** Zonal Railway shall decide the source of procurement from among the following:

(1) **OEM or their Authorized Representative -** Proprietary article certificate (PAC) duly signed by the competent authority shall accompany the indents. A rate contract may be entered when number of items from a single source is sufficiently large to simplify and expedite the procurement process. This rate contract may be entered on pattern of DGS & D rate contract with list of items along their unit rate. No quantity, however, is required to be indicated against each item. The procurement against rate contract may be done for a period of 2-3 years specifying annual financial ceiling.

(2) **Original Item/Component Manufacturers of High Repute in the Industry -** These item/unit component manufacturers are the ones having established reputation in the industries. These also include those from whom the OEM also sources the supply for their machines. Spares like bearings and unit components like pumps are examples of such items/unit components. Procurement from them may be done either through limited tenders if there are more than one sources or PAC if there is only one source. Due care in establishing compatibility of item/component should be expressed.

(3) **DGS & D Rate Contract –** Officers of Track Machines Organisation in Sr. Scale and above shall be designated as Direct Demanding Officers, and they can directly place orders for items available in DGS & D rate contract.

(4) **Indigenous Sources - Following procedure shall be adopted**

(a) Zonal Railways shall classify the spares required in various groups based on the commonality of the manufacturing process or the source of supply.

(b) **The groups can be formed broadly as given below:**

(i) Mild steel components.

(ii) Alloy steel, heat treated and ground components.

(iii) Grey iron castings alloy steel castings.

(iv) Engine filters and other components.

(v) Hydraulic filters.

(vi) Hydraulic hoses.

(vii) Pneumatic hoses.

(viii) Seals and 'O' rings.

(ix) Conveyor belts and conveyor chains.

(x) Hydraulic cylinders.

(xi) Hydraulic Pumps, motors, valves and other hydraulic components.

(xii) Printed circuit boards (PCBs).

(xiii) Bearings.

(xiv) Tamping tools.

(xv) Tamping unit components.

(xvi) Excavating chains.

(xvii) Oils and lubricants.

(xviii) Nuts/bolts and fasteners.

(xix) Other consumables.

(c) Items to be indigenized and whose local sources are available should be identified and specifications and drawings should be got issued by RDSO.

(d) The Railways shall maintain the list of approved suppliers of various groups and important indigenous spares shall normally be procured from the list of approved suppliers. The list should be uploaded on the website for information of the other Railways.

(e) The Railways shall periodically carry out the performance review of the list of approved suppliers for various groups and take action to update the same. Such performance reports shall also be made available on the website along with other details like purchase orders etc.

(f) During the stages of development or trial of new indigenous items or in case there are issues with the quality of supply; procurement will be

reverted from the proven sources or from OEMs. The idea is to avoid idling of costly machines.

1005 Inspection and Acceptance of Materials - Inspection and acceptance of materials shall be done by the nominated official of Track Machine Organisation or as specified in the contract.

1006 Modes of Procurement, Repairs and Maintenance

(1) Cash Imprest

(a) Cash imprest of Rs. 5,00,000/- or more shall be provided with the officer in-charge of the Zonal Depot for emergency repairs and purchase of essential stores, including consumables, tools plants, and machinery, for day to day operation of machine. The objective is to ensure that costly machine(s) should not idle for small amounts.

(b) Cash imprest of Rs. 2,00,000/- or more shall be provided with the officer in-charge of satellite depot and in-charge of fleet of machines for emergency repairs and purchase of essential stores, including consumables, tools plants, and machinery, for day to day operation of machine. The objective is to ensure that costly machine should not be idle for small amounts.

(c) A cash imprest of Rs. 5,00,000/- shall be provided with the officer in-charge of Rail Grinding Machine for emergency purchase of essential stores, consumables and for day to day repairs of tools, plants, and machinery,

(d) The cash imprest available shall be reviewed on the Zonal Railways every three years.

(2) **Emergency Repairs/Purchase -** In addition to cash imprest, officers dealing with track machines shall be delegated financial powers for emergency repairs and purchase of spares, tools, plants and consumables to meet the emergent requirements. GMs are fully authorized to delegate these powers to Dy.CE/XEN/AXEN/TM(s) and Sr.DENs of the division and such powers are to be incorporated in SOP of Zonal Railways.

(3) **Annual Maintenance Contract (AMCs) -** For proper upkeep and maintenance of track machines as also for trouble shooting and attending break-downs, it is desirable to enter into AMC with OEM or their authorized agent(s) on single tender basis. AMC can be for the complete machine and/or the important unit components like engines. AMCs may also be invited from open market, depending on the availabilities of agencies available with necessary expertise. Wherever OEM or his authorized agent is not willing to come forward or his performance is not satisfactory, open tenders may be called for AMC from open market or approved firms. Financial powers from AMCs are defined in the SOP of the Zonal Railways. For machines taking up AMC for which no firms come forward, contracts for special repairs may be entered into.

(4) **Contracts other than AMCs -** Planned repairs like overhauling of engines, overhauling of tamping banks, reconditioning of tamping tools, reconditioning

tool arms, painting of machines, repairs to flooring /cabin etc., wiring, modification of camping coaches, modification of BRNs, and such other works as not covered under annual maintenance contracts are to be carried out on the lines of works contract under revenue or other heads as applicable.

1007 Condemnation of Track Machine - Track Machines shall be condemned after completion of codal/useful life. Following procedure shall be adopted:

(1) Executive in-charge of the track machine (Deputy Chief Engineer/Executive Engineer) will prepare a detailed report on the condition of the track machine and send it to Zonal Railway headquarter. The report must contain the following information:

(a) Introduction.

(b) Brief history.

(c) Major defects recorded.

(d) Probable cost of rehabilitation.

(e) Present output per unit effective hour of work and quality of work.

(f) Items proposed to be taken out for use as spares.

(g) Financial justification for replacement, reconditioning or abandonment in terms of Annexure G (Para 240) of Finance Code Vol. I in case the machine has not completed its codal life.

(h) Recommendations.

(2) A Committee of three SAG officers of the Zonal Railways, one each from Engineering, Finance and Electrical Engineering will examine the report, and finalize their recommendations. They may choose to inspect the machine, if necessary. The nomination of the officers for the committee may be done in the form of a Standing Committee on the Zonal Railways.

(3) The recommendations of the SAG Officers Committee will be forwarded to Railway Board, duly accepted by PCE/CE (Coordination).

(4) After approval of Railway Board, the railways will be advised for condemning the machine and write back the capital cost of the machine.

1008 Codal life of machines and POH/IOH Frequencies - Codal life of different type of machines and frequencies of POH/IOH shall be as below:

Machines	Codal Life	POH Schedule
Rail Grinding machines (RGM)	15 years	Every 15000 ERH or 60 months whichever is earlier
All tamping machines i.e. Duomatic, CSM, Tamping Express, MPT, UNIMAT etc.	20 years	1st POH: 8000 ERH 2nd POH: 14000 ERH And subsequent at every 4000 ERH or on condition basis.

Machines	Codal Life	POH Schedule
Ballast screening machines BCM, SBCM, Ballast Regulating machines etc	20 years	1st POH: 8000 ERH 2nd POH: 14000 ERH And subsequent at every 4000 ERH or on condition basis.
Track renewal machines like TLE, TRT, Points and Crossing changing machines, Dynamic Track stabilizer.	20 years	1st POH: 8000 ERH 2nd POH: 14000 ERH And subsequent at every 4000 ERH or on condition basis.
Material handling machines UTV, RBMV	25 years	1st POH: 8000 ERH 2nd POH: 14000 ERH And subsequent at every 4000 ERH or on condition basis.

1009 Calculation of Unit Cost of Working of Different Track Machines - The following procedure shall be adopted for working out unit cost of the machines:

(1) Capital Recovery Factor – The unit cost of working shall be calculated taking Capital Recovery Factor (CRF) with interest rate of 12% from the tables in Annexure-C of Indian Railways Finance Code (1982 Edition). CRF shall depend on codal life of machine. CRF Values for 15 years, 20 years and 25 years codal life is 0.14682, 0.13388 and 0.12750 respectively considering interest rate of 12%.

(2) Codal Life of Machines –Codal life of the machine in terms of number of years of effective working and POH frequency is as stipulated in para 1008 above.

(3) Proportional POH and IOH Cost – The IOH frequency of machine is @ 2000 ERH which allows IOH to be planned in between POH. For calculating unit cost of working for CSM as shown in example below, 2 POHs have been considered at 8000 ERH and 14000 ERH and 7 IOHs have been considered at 2000, 4000, 6000, 10000, 12000, 16000 and 18000 ERH. The per annum proportional POH/IOH cost has been worked out by equal distribution of total cost over the life of machine taken as 20 years.

(4) Fixed and Variable Cost – Unit cost of machine shall comprise of two components namely fixed cost (FC) and variable cost (VC). Fixed cost comprises of capital recovery factor (CRF) and staff cost. The variable cost will comprise of proportionately distributed POH/IOH expenditure and actual expenditure on spares and consumables. Expenditure on POH and IOH shall be considered based on average of past figures for similar vintage machines. While fixed cost shall be calculated on duration basis (per day or part thereof), variable cost shall be worked out on basis on actual work done in respective units like kms or number of turnouts.

(5) Working and Approval of Unit Cost – Unit cost of working for different types of machines shall be worked out at the end of every financial year. Unit cost

statement shall be approved by CE/TM. This tentative unit cost rate for purpose of estimation for a year will be calculated by assuming 7% escalation over calculated unit cost of previous year.

Example 10.1 Unit Cost of Tamping Done by CSM –

(a) Data :

i)	Initial cost of the machine	:	Rs. 13.50 Crore
ii)	Rate of interest	:	12%
iii)	Life of machine	:	20 years
iv)	Expenditure on IOH (each)	:	Rs. 30 lacs
v)	Expenditure on POH (each)	:	Rs. 125 lacs
vi)	Annual expenditure on machine (VC)		
	Spare (actuals)	:	Rs. 16 lacs
	Consumables (actuals)	:	Rs. 24 lacs
vii)	Annual Staff expenditure (FC)	:	Rs. 35 lacs
viii)	Staff Overheads (Proportionate) (FC)	:	Rs. 8.75
ix)	Average yearly engine hours	:	1000 ERH

(b) Annual Cost of Working:

	- Actual tamping done in the year	:	500 km
	- Life of machine	:	20 years
	- CRF (Capital Recovery Factor)	:	0.13388
i)	Capital recovery (FC)	:	Rs.1,80,73,800
ii)	Proportional exp. on POH/IOH(VC)	:	Rs.23,00,000

$$\frac{\text{IOH / POH (7 x 30 + 2 x 125) Lakhs}}{20}$$

(c) Annual Fixed Cost

i)	Capital Recovery Factor	:	Rs.1,80,73,800
ii)	Staff expenditure	:	Rs 43,75,000
	TOTAL FIXED COST		**Rs.2,24,48,800**
	FIXED COST PER DAY		**Rs. 61504 (F)**

(d) Annual Variable Cost

i)	Cost of spares	:	Rs. 16,00,000
ii)	Consumables	:	Rs. 24,00,000
iii)	POH/IOH	:	Rs. 23,00,000
	TOTAL VARIABLE COST		**Rs. 63,00,000**

VARIABLE COST PER KM	**Rs. 12,600**	**(V)**

Unit Cost - Explained:

Unit Cost shall be worked out in terms of Fixed cost per day (or part thereof) (F) and Variable cost per Km (V)

Suppose a CSM works 2 km on a day, the total cost of Tamping will be

Fixed cost for one day	=	Rs. 61,504
Variable cost for 2 Kms = 2 x 12,600	=	Rs. 25,200
Total Cost of work for a day	**=**	**Rs. 86,704**
Cost per km of tamping on that day	**=**	**Rs. 43,352**

Unit cost for the work shall be computed on basis of progress of work in kms and number of days machine made available for work. Days taken in shifting shall be charged based on the actual. Thus, the jurisdiction which moves the machine expeditiously would save expenditure. When machine is moved for other non-divisional units like construction and other agencies work, the days in transit for the non-divisional units shall be charged to that unit.

CHAPTER 11

MONITORING

1101 GENERAL - Track machines, being capital-intensive assets need track possession for working and shall be monitored on day-to-day basis at the level of division and headquarters. Both aspects of monitoring i.e. data collection & entry and generation of alerts/reports have to be meticulously done to reduce the response time and ensure optimum utilization of track machines. In addition, a system of periodical meetings at different levels is required for bringing to fore the issues affecting the smooth functioning of track machines and its organization and to generate solutions to the issues. These interactions will also serve to have finger on the pulse of the organization.

It is desirable to design TMS module keeping in mind above aspects so that relevant reports reach the concerning officials in the hierarchy at pre-decided times periodically.

(1) Data Collection & Entry - This shall consist of creation of data for the following

(a) Machine details.

(b) Section wise availability of corridor blocks for each day of the week.

(c) Manpower, their deployment and various competency certificates.

(d) Target and deployment programme.

(e) Daily machine utilization– duty hours, movement, block working and progress and important machine parameters.

(f) Maintenance schedules including IOH and POH details, failures and repairs etc.

(g) AMCs and other contracts, visits of service engineer.

(h) Procurement of spares and consumables.

(i) Issue and utilization of spares and consumables.

(j) Details of unit assemblies and costly components like engines, tamping banks etc.

(k) Inspections at various levels.

(l) Frequency of maintenance operations like tamping, deep screening etc.

(m) Costing of procurement of spares, consumables, maintenance, repair and operations.

Data collection, entry and validation of different sets of data shall have authorization at various levels i.e. machine in-charge, engineering control in the division, satellite depot, zonal machine depot& its control, zonal headquarter & its track machine control and railway board. Scrutiny of data

entered, validation and authority for corrections at different levels has also to be designed so as to be an integral part of the data entry.

(2) Generation of Reports and Alerts – The working of track machines shall be monitored by generation of various reports including exception reports and predefined alerts through software. This would consist of generation of -

(a) Periodical Reports – Daily, weekly, monthly, yearly reports with an option of user specified period for a specific machine or machines types, for the jurisdiction of a SSE/AEN/DEN/division etc. including comparative positions for corresponding periods of previous spells/years. It should be possible to select the machines.

(i) Stipulated and actual progress in tabular and graphical form.

(ii) Blocks stipulated, demanded, granted and availed.

(iii) Blocks granted within the specified corridor and outside the corridor.

(iv) Position of AMCs and other contracts.

(v) Maintenance and other schedules including IOH & POH and down time analysis.

(vi) Utilization of consumables i.e. diesel, lube oil, hydraulic oil, grease etc.

(vii) Utilization of spares and that of fast moving spares.

(viii) Unit assembly and costly components.

(ix) Expenditure on items like consumables, spares, unit assemblies, staff for operations, for spares and for depot working, IOH, POH etc.

(x) Inspections in tabular and graphical form.

(xi) Training details.

(xii) Manpower detailed reports including medical and other competencies.

(xiii) Costing per unit of work (fixed cost and variable costs).

(xiv) Movement of machines –Intra and inter-divisional movement of machines as also inter railway movement.

(xv) Health related data, service engineer visit details etc.

(xvi) Deep screening chart and overdue deep screening chart.

(xvii) Tamping chart and overdue tamping chart.

The module shall be so designed to get these reports, machine wise, machine type wise, unit wise, division wise, and railway wise.

(b) Exception Reports for Management and Control at Various Levels

(i) Data not entered (of different types like progress, maintenance etc.).

(ii) Machines not available for work (for different reasons like schedule maintenance like IOH, POH, unit replacement, repair, movement etc.).

(iii) Machines available but not worked (for different reasons like block not given, site not ready, track material not available, labour/staff not available, holiday, rest etc.).

(iv) Overdue of maintenance operations like tamping, deep screening etc.

(v) Overdue maintenance schedules of machines.

(vi) Manpower issues such as overdue PME, refresher, competency, road learning.

(vii) Repeat tamping or deep screening within user specified period.

(c) Alerts on the Home page of TMS and/or Mobile based on Pre-decided Trigger Conditions

(3) Periodical Meetings – Periodical review of the different aspects of machine working at appropriate levels is essential for keeping tab on the field situation and in turn for the proper functioning of system and to keep the staff informed and motivated.

(a) Regular Meetings - shall be held at Zonal Depot/HQ level to monitor day-to-day progress, impediments etc. Daily meeting shall also be held at field level between machine staff and P. Way staff to avoid any communication gap and ensure quality work by the machines. It will also be useful to conduct pre-work inspection of work site by SSE/JE/TM, SSE/P.Way, SSE/TRD and SSE/S&T, as per need of the work.

(b) Review Meetings

(i) Fortnightly meetings of SSE/TM/I and machine staff with SSE/TM/SDI or SD (who is in-charge of fleet of machines) with his concerned staff, if any for the purpose of discussing about the health of the machine, failures of machines, safety issues etc. SSE/TM/SDI or SD will mostly hold these in the field generally during the field inspection.

(ii) Monthly review meeting of SSE/SDIs with ZMD officials and respective AEN/TM/Lines with Dy.CE/TM/Line. Various issues of health of machine, progress, quality of work, failures, spares, consumables, staff, safety etc. will be discussed in this meeting,

(iii) Quarterly meeting of Dy.CE/TM/Line and AEN/TM/Lines with CE/TM. Various issues of health of machine, progress, quality of work, failures, spares, consumables, staff, safety etc. will be discussed in

this meeting. The planning for AMC's, procurement of spares, other proposals, infrastructural facilities, camping coaches etc. shall also be discussed.

(iv) Periodic meetings should also be held by CE/TM and Dy.CE/TM with DRM and divisional officers of different departments as per the need and also at Zonal HQ with traffic officers to get co-operation for ensuring blocks, joint working, quality and progress of work.

1102 Organization for Monitoring - The offices of satellite depot, zonal maintenance depot and HQ will have a system of control set ups for data entry and communication of information for monitoring the working of the track machines. All these controls will function 24x7 as machines work in the field 24x7.

(1) **Track Machine Control at Headquarters**– The track machine control office in the headquarter of railway shall function under the administrative control of JA Grade/Sr.Scale officer of the Track machine organization to have command and control over the units in the divisions and Zonal depot. This control office shall be manned round the clock on all 7 days of the week by staff not lower than Junior Engineer with suitable roster. EI roster shall be followed for the control staff. The control office shall be provided with railway telephone with STD facilities, DOT landline telephone with STD facilities, a fax machine, CUG mobile connection with smartphone instrument for effective communication with connected offices. A PC with printer and Internet connection (with wi-fi) for feeding of various details and monitoring, printing reports through TMS, as well as other than TMS, shall also be made available.

(2) **Track Machine Control at Zonal maintenance Depot (ZMD) Level** – The track machine control office in the zonal maintenance depot shall function under the administrative control of JA Grade/Sr. Scale officer in-charge of the depot to co-ordinate with headquarter and other divisions, as also with the satellite depots and track machines in-charges. This control office shall be manned round the clock on all 7 days of the week by staff not lower than Junior Engineer with suitable roster. EI roster shall be followed for the control staff. Divisional control office shall be provided with Railway telephone with STD facilities, DOT landline telephone with STD facilities, a fax machine, CUG mobile connection with smartphone instrument for effective communication with connected offices. A PC with printer and Internet connection (with wi-fi) for feeding of various details and monitoring, printing reports through TMS, as well as other than TMS, shall also be made available.

(3) **Divisional Control** – The day to day planning for deployment of machines, arranging blocks for the machines, monitoring progress of the machines and co-ordination with other departments for effective utilization of machines will be done by engineering control of the division. The present set-up of divisional control will serve this function, augmented by staff from track machine organization as required.

(4) **Satellite Depot (SD**) – An effective mechanism for SD to closely liaison with track machine in-charges and ZMD shall be put in place. Since the ZMD/SD have to respond on real time basis for any failure, breakdown etc., the officials shall have direct and real-time interaction with machine-in-charges and with ZMD and also with SD of other divisions of the zone. SD shall be provided with railway telephone with STD facilities, DOT landline telephone with STD facilities, a fax machine, CUG mobile connection with smart phone instrument for effective communication with connected offices. A PC with printer and internet connection (with wi-fi) for feeding/validating details and monitoring, printing reports through TMS, as well as other than TMS, shall also be made available. SD shall have a nominated official in the morning shift for liaison with zonal depot and machine in-charges.

1103 Functions of Divisional Control in respect of Track Machines

(1) Advance planning of the daily machine works to be done.

(2) Monitoring of grant of blocks for the machines.

(3) To co-ordinate between the different departments in the control, machine in-charges, SD, ZMD as required; for effective utilization of machine.

(4) Regular communication with engineering officers of the division.

(5) Monitoring the work during the block for any unusual incidents and real-time reporting to the officials concerned.

(6) Collecting the daily progress details (block hours, time of important events from machine being given ready to machine stabled in siding, location of work, break-up of time consumed in different operations in the block, output etc.) duly reconciled with SSE/P.Way and SSE/JE/TM along with reasons for less progress, if any.

(7) Entering and validating track machine progress into TMS by SSE/JE/Control in the division through specific login id in addition to other entries.

(8) Detention to traffic if any, and other factors, affecting train movement on account of working of machines.

(9) Monitoring movement of track machines within the division including machines of other Zonal Railways.

(10) Recording details of failures of machine, if any and getting failure reports.

1104 Functions of Track Machine Control at ZMD Level - The main functions of track machine control at ZMD level shall be:

(1) Communication link between the machine in-charges, divisional control, satellite depots and headquarter.

(2) Co-ordination for issues related to deployment of manpower etc. on different track machines.

(3) Co-ordination for deployment of machines as per the programme issued.

(4) Co-ordination for movement of machine for deployment, major schedules like POH, IOH, replacement of major components and assemblies and repairs to be done in sheds.

(5) Co-ordinate to ensure expeditious movement of spares for repairs.

(6) Coordination for deputation of service engineer of OEM etc.

(7) Obtaining and recording the details of unusual incidents and reasons affecting machine utilization.

(8) Getting failure reports from the machine in-charges.

(9) Regular interaction with HQ control in respect of above.

(10) Providing feedback to HQ control regarding unusual, breakdown of machines etc. in real time.

The information collected by the track machine control and instructions given should be recorded comprehensively in a logbook, which shall be scrutinized by the officials to ensure effective functioning.

The functions of ZMD control have to be dovetailed in the TMS module for track machines.

The systems evolved in different railway for distribution of roles and responsibilities between the HQ, ZMD, SD and divisional control may differ and will not be disturbed or modified if functioning satisfactorily.

1105 Functions of Track Machine Control at Headquarter Level - The main functions of track machine control at headquarter level shall be:

(1) Ensuring feeding of track machine details including daily progress into TMS by respective officials at different levels and divisional controls.

(2) Contacting the Divisional Controls for obtaining and recording the details of unusual incidents and other reasons affecting machine utilization.

(3) Authorizing shifting of machines from one division to other.

(4) Monitoring of unusual, failures and block bursting and recording assistance required.

(5) Coordinate with Railway Board TMS cell for commissioning of new machines/shifting of machines to other Railways.

(6) Monitoring deployment of the machines in the field as per the approved programme and bringing the deviations to the knowledge of HQ officials.

(7) Communicating essential instructions from HQ to divisions/field units.

(8) Generation of various reports at HQ for Railway Board, PCE, CTE, CE/TM etc.

The information collected by the track machine control and instructions given should be recorded comprehensively in a logbook, which shall be scrutinized by the officials to ensure effective functioning.

1106 Monitoring Modules of Track Machines - The deployment and performance of Track machines is to be monitored very meticulously and desired reports extracted for an informed analysis of usage of track machines. The parameters shall be monitored broadly for two areas:

- Working of machines affecting productivity and utilization,
- Maintenance of machines affecting health.

(1) Parameters for monitoring Productivity and Utilization of Machines

(a) Productivity vis-à-vis Target - In the beginning of the year, railway wise targets for various types of machines are issued by Railway Board. These yearly/monthly targets should be broken into weekly targets and productivity monitored vis-a-vis assigned targets. The shortfall in productivity of machines should be made good by addressing issues such as health of machine, adequate traffic blocks etc. Efforts shall be made to achieve these targets and to ensure optimum productivity of track machines.

(b) Adherence to Deployment Programme - The deployment programme issued for each machine in the beginning of the year shall be followed. It should be the endeavor of all concerned that no deviation in the issued programme is allowed. The performance shall be periodically reviewed to achieve the pre-decided deployment of machines in various sub-sections of division so as to complete the targeted work without any shortfall.

It shall be the responsibility of track machine organization to make machine available to work in good fettle as per the requirement and deployment planning. Loss of time on account of schedule of the machine, major repairs, shifting etc. shall be minimized. The schedules of the machine i.e. 50 hrs, 100 hrs, 200 hrs, 500 hrs, 1000 hrs and also IOH, POH shall be meticulously planned and advance notice given to division for optimization of resources.

The availability of each machine shall be worked out in terms of number of days machine is made available for work against total number of deployed days in each division.

(c) Utilization of Machine – SBH, DBH and ABH - Railway Board has stipulated minimum block hours for each type of machine. All out efforts shall be made to operate traffic blocks equivalent to stipulated blocks hours thus making the Utilization ratio (granted blocks/stipulated blocks) as 1.0. Immediate steps for improving the traffic blocks for machines having utilization ratio less than 0.8 should be taken at appropriate level.

(d) Performance of Machine in terms of rated output against achieved output - Rated output of machines per effective hour is stipulated for each type of machine. Ratio of actual output to rated output is a good

indicator of performance of machine. All out efforts shall be made to achieve performance ratio (actual output/rated output) as 1.0. Steps shall be taken to analyse and take corrective action for the machines having performance ratio less than 0.8.

(2) Parameters for Monitoring Health of Machine

(a) Monitoring of Prescribed Schedules of Machine - Prescribed schedules of machines as stipulated in relevant chapter of this manual, to ensure proper health of machines, shall be strictly adhered to and adequate time given for these maintenance works. Overlapping schedules shall be clubbed to reduce the down time of machine without compromising on quality of schedules.

(b) Replacement Planning of Major Components/Assemblies - Major components/assemblies of machine shall be replaced in a planned manner and monitored at level of ZMD. These major components shall include:

(i) Engine.

(ii) Tamping unit.

(iii) ZF and other gear boxes.

(iv) Axles and wheels.

(v) Pumps and motors.

(vi) Other critical components as decided.

All these important assemblies shall be serially numbered and performance of these components monitored in a centralized database for meaningful analysis and control.

(c) Monitoring of consumption of oils and consumables - Consumption of consumables and various type of oils i.e. diesel oil, lube oil, hydraulic oil and gear oil are very essential to be kept under control. The daily/monthly reports shall form the basis and apart from cost aspect excess consumption will constitute a symptom, of ill health of a machine, indicating a need for corrective action.

(d) Monitoring of consumption of Spares - While the consumption of mandatory spares requiring replacement at specified intervals will have to be on a set pattern, any excess drawl shall be critically reviewed. Similarly, case of spares consumed on repetitive basis, the root cause for such excess consumption should be analysed and corrective action to change the sub-assembly or going in for better quality of spares will have to be decided. The monthly reports will bring out the consumption forming the basis for this item. Issue of stores/spares at base depot shall be only with SSE/TM/ZD's approval in the case of Imported spares and also when the stock is at a low level.

(e) Failure Analysis - Each failure of the machine or any of its components either during block or detected during maintenance shall be recorded and documented in the failure register. The failure analysis should be done machine type wise in following categories

(i) Mechanical failure.

(ii) Electrical failure.

(iii) Hydraulic failure.

(iv) Pneumatic failure.

(v) Miscellaneous failure.

Failure reports in the prescribed proforma shall begiven by SSE/TM/Line to SSE/TM/SDI and details along with remedial measures discussed during the monthly meeting held at the level of SSE/TM/SDI and Dy.CE/TM/Line. Failure reports of major nature and of those causing bursting of block shall be sent to HQ office also. Repeated failures and failure suspected on account of design shall be reported to RDSO for further study and analysis. Similarly, failures related to POH shall be reported to respective POH workshops.

(f) Monitoring of Competencies of Staff and their validity - Track machine have to work in block section and accordingly staff have to in possession of various certificates such as PME, block competency, route learning, machine competency etc. This is to ensure that staff is fit to work in block section with track machine. A monitoring mechanism shall be put in place to ensure that all staff possess necessary fitness and certificates. Staff due for certification/examination shall be directed timely to the concerned authority for examination/training/certification.

(g) Recording of machine parameters while working - Record of important machine parameters shall be kept by machine in charge while working. This may include various parameters such as squeezing pressure, squeezing time, tamping depth, vibration pressure in tamping machine, depth of cutting and lifting in BCM and SBCM. Monitoring of these parameters shall also ensure quality of the work done by the machine during block. Aim should be to develop such recording mechanism that records these parameters automatically while working.

1107 Reports and Documentation for Track Machines - The following reports/documents shall be used in monitoring of performance and other items in respect to working of machines:

(1) Daily performance report – A daily performance report compiled by the track machine control based on the information/fed on-line or collected from all divisional engineering controllers/field staff. This will be a computer printout containing details of blocks demanded and actually made available, proportionate output achievable and actually achieved cumulative figures

for the month/year. Brief remarks for less output shall also be included for the information of CE/TM, CTE and PCE. A register shall be maintained by track machine control for serving as a "Master Record" for all relevant data till such time the information is computerised.

(2) **Daily log –** A day wise report from the machine in charge to XEN/AEN/TM in charge of field incorporating block details, performance, schedules done/overdue, consumables/spares used, oil consumption, spares required for the machine, systems by passed/dummied in the machine, repair and failure shall be made out. A daily logbook shall be maintained by machine incharge as per the format given in **Annexure 11.1**.

(3) **Breakdown report –** The machine in charge will submit a report to Dy.CE/XEN/TM/Line on every breakdown of the machine resulting in failures exceeding half an hour. The report will be submitted as per format given in **Annexure 11.2.**

(4) **Monthly appreciation report –**Monthly appreciation reports from the machine in charge on performance furnishing:

(a) Number of days worked.

(b) Number of days not worked with reasons.

(c) Block availed.

(d) Target.

(e) Output.

(f) Reasons for less output.

(g) Other remarks.

(h) Consumables/spares used and cost thereof.

(i) Failures/repairs with spares and cost particulars.

(j) Details of service Engineer's visit and copy of the reports.

(5) **Monthly summary –** A summarized monthly performance report from XEN/AEN/TM/Line showing schedules of inspections done, health of machine, failure analysis, adequacy of allied track works etc. of the machines under their control to Headquarter and Dy.CE/TM/Line.

(6) **Record for 3 years –**A summary of availability of each machine for a period of 3 years shall be maintained at the satellite depot and zonal depot showing at a glance the availability, breakdowns, schedule repairs and POH of machine.

1108 Track Management System (TMS) – Present Module - Track Management system (TMS) is web enabled multi user platform available for monitoring mechanized track maintenance inputs and their efficacy. Track machine module of TMS is an integral part of overall architecture of track maintenance system, generating various important reports, including deployment planning of a machine,

tamping chart etc. It should be the endeavor to switch over to TMS completely in a time bound manner so that paperless working can be achieved. Presently, only the progress related module is available in TMS. Statement of different kind of reports presently available in TMS is summarized in Annexure 11.3.

Annexure 11.1

	TRACK MACHINES ORGANISATION												Page No.
WESTERN RAILWAY	ENGINE LOG BOOK												
Machine No.			Type		Engine No.		1		Date ___/___/20__				
							2						
SSE/TM			JE/TM				Stabling Station						
Machine Movement Details	STN FROM		STN TO		Time From _____ To_____								REMARKS
Block Utilisation details	Block No	Planned		Availed		Effective		Location Attended					Work No. of EQ length in Km SL/ Turn out
		From	To	From	To	From	To	STNF	STNT	LN	KMF	KMT	
Block Time Lost	Block No.	Time		Reason for loss of time									
Engine Meter Reading	Start		Close	BF From prev. day		Duration on date		Total					
Engine No 1													
Engine No 2													
Name & Signature	M/C. Incharge											JE(P.Way)	

Consumable Used	HSD	LUB	HYD	Gear Oil	Cotton Waste	Grease	Others	
Spares Utilisation	FIT/ Released	Part Code	New/ Repaired	Description	Unit	Scheduled/ Break down	Repair cost	Remarks
Schedule details	Schedule Type			Engine Meter Reading			Cost	
	Remarks							
Break down details	STN CODE	From	To		In Block or not	Major/Minor	Engine Meter Reading	
	Remarks							

Special Report	**Reasons /symptoms of likely Failure / Assistance**			

Reason for not availing Block, ifany **SSE/SE/JE/TM**

Annexure 11.2

BREAKDOWN REPORT OF TRACK MACHINE

(a) Report by Machine In charge

1. Machine No. …….. Date of breakdown ……..
2. Block permitted from …… hrs. to…… hrs.
3. Block section ……Division ……
4. Time of breakdown……. hrs. to …… hrs.
5. Time of block cleared ……
6. Detention to train if any ……
7. Description of failure ……
8. Date of last POH/IOH: a) Machine …… b) Engine ……
9. Date of last schedule maintenance ……
   And observations made ……
10. Rectification action ……
11. Date and time M /c made fit ……
12. Report on failed part:-
    No. & description of part ……
    Make of the part ……
    Date of fitment ……
    Part identification code ……
    Spare part brought from ……
13. Name of the machine I/c ……
14. Officer/Supervisor at site ……
15. Assistance required, if any, ……
    From XEN/TM/Line office
16. Action suggested to prevent ……
    recurrence/reduce breakdown time
    Dated …… Signature ……

(b) Report by Line Officer

1. Detailed description of failed part ……
2. Expected life of component ……
3. Period of service given by ……
   component at time of failure
4. If premature failure:
   a) Reason of failure ……
   b) Name of supplier & brand ……
5. Whether warranty period exists or not ……
6. If mature failure reason for not changing
   component ……
7. Whether failure was avoidable or unavoidable ……
8. Staff held responsible and action taken against ……
9. Action suggested to prevent recurrence ……

Dated ……

Copy to –Dy.CE/TM/Line; Dy.CE/TM/HQ

Annexure 11.3

TYPES OF REPORTS IN TMS – BLOCKS, AVAILABILITY & PROGRESS OF TRACK MACHINES

SN	Report Heading	Period	Report Content
1.	Progress (Machine Wise)	Specified	Day wise block availed, time loss, progress, location, reason for tamping, design tamping, BCM site opened with speed for specified duration for single selected machine.
2.	Progress (Detailed)	Single day	Detailed report for whole railway/division either machine wise or division wise with various times consumed/lost.
3.	Progress (Summary 1)	Single day	Summary of machine holding, machines worked, progress and break up of reasons for not working, with summary of holding, worked in no. and % for all zonal railways.
4.	Progress (Summary 2)	Single day, month and fin. year	Summary of progress for whole railway /division for the selected day, for the month up to the selected day and for the financial year up to the selected day.
5.	Machine Idle	Single Day	Machine Idle – under repair/breakdown, under shifting, not planned as site not ready, depot work, machine under IOH/POH and stabled for condemnation – for a whole railway/division of any zone/division of Indian Railway.
6.	Missing Data Entry	Specified	Missing data entry for each machine worked in each division giving dates of missing entry as well as total days– can be seen for railway, division for all machines or M/c type wise.
7.	Missing Data Summary	Specified	Missing data entry days division wise total – no break up or details. **This can be covered in SN- 6**
8.	Progress on Date	Single day	Detailed report for a railway/division either machine wise or division wise with progress, block and idling days for the month with timing of block in 24 hour format.
9.	Progress in Mega Block	Specified	Progress and block details, date wise for each machine worked in mega block during the specified period.
10.	Machine Progress & Availability	Specified	Machine availability for each machine for a railway/division with % ABH/SBH and machine days not worked break-up reason wise.
11.	Machine Type	Specified	Machine wise cumulative block duration, days and

	wise		progress for whole railway/division/selected section for selected machine type(s) with sub-total.
12.	Machine Utilization	Specified	% DBH/SBH, % ABH/DBH for whole railway/division – giving figures division wise for each machine type
13.	Night Working	Specified	Total hours worked, worked in night in hours and % (19:00 to 05:00 hours) for whole railway/division, division wise, machine type wise.
14.	Progress Target Vs. Actual	Specified	Annual target, proportionate target, total and % progress for whole railway/division, division wise machine type wise.
15.	Yearly Summary	Specified	Day wise pictorial representation of specified machine worked and reasons for not worked for a specified period for whole railway/division.
16.	Machine Under Repair	Single day	Machine under repair/breakdown and IOH/POH giving date since repair and reason for repair division wise on a given date.
17.	Tamping Chart	As on	Track details, tamping details year wise for last 5 years, month wise for current year for a selected official for a selected line of a selected section (8 kms at a time).
18.	Machine Availability Summary	As on	Average machine holding, average machine worked in no. of units and % effective for the specified period of this year as well as last year for selected/all Zonal Railways.

LIST OF ABBREVIATION

ADEN	Assistant Divisional Engineer (of open line)
AEN	Assistant Engineer
AEN/TM/Line	Assistant Engineer/Track Machine/Line
ALC	Automatic Guiding Computer
ALP	Assistant Loco Pilot
AMC	Annual Maintenance Contract
ASM	Assistant Station Master
AT	Auxiliary Track
AT weld	Alumino Thermit Weld
AXEN	Assistant Executive Engineer (of other than open line)
BCM	Ballast Cleaning Machine
BEML	Bharat Heavy Earth Movers Limited
BFR	Bogie for Flat Rail carrying
BRM	Ballast Regulation Machine
BRN	Air Braked Wagon
CB	Center Bogie
CCD	Charge Couple Device
CCTV	Closed Circuit Television
CE/TM	Chief Engineer/Track Machine
CFL	Compact Fluorescent Lamp
CMS	Computerized Measuring System
CPC	Contact Point Central
CPF	Contact Point Field
CPOH	Central Periodical Overhauling
CS	Correction Slip
CSM	Continuous Tamping Machine
CST-9	Central Standard Trial 9 Sleeper
CT	Curve – Transition Junction
CTR	Complete Track Renewal
CUG Mobile	Closed User Group Mobile
CUM	Cubic Meter
CWR	Continuous Welded Rail
CWS	Computerized Working System
DEN	Divisional Engineer (of open line)
DGR	Defect Generation Rate
DGS&D	Directorate of General Store and Depot
DPR	Data Processor Recording
DPT	Dye Penetration Test

DRP	Data Recording Processor
DSL	Diesel
DTS	Dynamic Track Stabilizer
Dy.CE (TM) /Line	JAG/SG officer in-charge of the track machines working in the divisions on a Zonal Railway
Dy.CE/TM	Deputy Chief Engineer/Track Machine
EOT	Electric Overhead Travelling
ERC	Elastic Rail Clip
ERH	Engine Running Hour
F	Front Tower
FB weld	Flash Butt Weld
FCC	Front Control Car
FOB	Foot Over Bridge
FRM	Shoulder Ballast Cleaning Machine
G&SR	General and Subsidiary Rules
GDMS	Grind Data Management System
GMT	Gross Million Tonne
GQI	Grind Quality Index
GRP	Grooved Rubber Pad
GRSP	Grooved Rubber Sole Plate
GVA	Geometry Value Assessment
HAZ	Heat Affected Zone
HMI	Human Machine Interface
HOER	Hours of Employment Regulation
HP	Horse Power
HQ	Head Quarters/Head Office
HRM/HM	High Rail Mild
HRS/HS	High Rail Sharp
HSD	High Speed Diesel
IMR	Immediate Removal
IMRW	Integrated Major Reference Works
IOH	Intermediate Overhauling
IR	Indian Railway
IRPW	Indian Railway Permanent Way
IRPWM	Indian Railway Permanent Way Manual
IRTMTC	Indian Railway Track Machine Training Center
ISA	Industry Standard Architecture
IT	Information Technology
JFT	Jig Fixture and Template

kmph	Kilo Meter per Hour
KVA	Kilo Volt Ampere
LC/L-Xing-	Level Crossing
LED	Light Emitting Diode
LI	Loco Inspector
LM	Locomotive
LP	Loco Pilot
LS	Loco Staff
LWR	Long Welded Rail
M	Middle Feeler Rods
m	Metre
m/c	Machine
MCI	Malleable Cast Iron
MCM	Master Crafts Man
MDU	Muck Disposal Unit
MF	Middle Front
MIG	Metal Inert Gas
mm	Millimeter
MMU	Mobile Maintenance Unit
MPT	Multipurpose Tamper
NRC	National Research Council of Canada
NT	New Track (sleeper)
OBS	Observation
OBSW	Observation for Weld
ODC	Over Dimensioned Consignment
OEM	Original Equipment Manufacturer
OHE	Overhead Equipments
OT	Old Track (sleeper)
P&C	Points and Crossing
P&C,ST	Points & Crossing Steel Trough Sleeper
P&CPSC	Points & Crossing Pre stressed Concrete
P. Way	Permanent Way
PAC	Proprietary Article Certificate
PCB	Printed Circuit Board
PCCM	Points and Crossing Changing Machine
PME	Periodical Medical Examination
POH	Periodical Overhauling
PQRS	Plasser's Quick Relaying System
PSC	Pre Stressed Concrete

PSU	Public Sector Undertaking
P.Way	Permanent Way
R	Rear Tower
RBMV	Rail Borne Maintenance Vehicle
RCC	Rear Control Car
RCD	Railway Consumer Depot
RCF	Rolling Contact Fatigue
RDSO	Research, Design & Standards Organization
RF	Rear Front
RG	Rest Giver
RGM	Rail Grinding Machine
RM	Rear Middle
ROB	Road Over Bridge
RPM	Revolutions Per Minute
S&T	Signal & Telecommunication
SAG	Senior Administrative Grade
SBCM	Shoulder Ballast Cleaning Machine
SC	Straight to Curve
SD	Satellite Depot or Standard Deviation
SDI	Satellite Depot In charge
SE	Super Elevation
SEJ	Switch Expansion Joint
SM	Station Master
SOD	Schedule Of Dimensions
SOP	Schedule Of Powers
Sr. DEN/DEN	Senior Divisional Engineer/ Divisional Engineer
Sr.DEN (Co)	Senior Divisional Engineer (Co-ordination)
SSE	Senior Section Engineer
SSE/DI (TM)	Senior Section Engineer/Zonal Depot In-charge (Track Machines)
SSE/JE	Senior Section Engineer/Junior Engineer
SSE/JE (P.Way)	Senior/Junior Section Engineer (Permanent Way)
SSE/JE (TM)	Senior/Junior Section Engineer (Track Machines) – posted on track machine
SSE/JE/D (TM)	Senior/Junior Section Engineer/Zonal Depot (Track Machines)
SSE/JE/P.Way	Senior Section Engineer/Junior Engineer/ Permanent Way
SSE/JE/SD (TM)	Senior/Junior Section Engineer/Satellite Depot (Track Machines)
SSE/JE/TM (I)	Senior Section Engineer/Junior Engineer/Track Machine (in- charge)
SSE/JE/TM(SDI)	Senior Section Engineer/Junior Engineer/Track Machine (satellite depot)
SSE/SDI (TM)	Senior Section Engineer/Satellite Depot In-charge (Track Machines)

SSE/TM (D)	Senior Section Engineer/ Track Machine (Depot)
SSE/TM(SDI)	Senior Section Engineer/Track Machine (satellite depot in charge)
SSE/TM/DI	Senior Section Engineer/ Track Machine /Depot In charge
ST	Steel Trough or Straight to Transition Junction
t	Ton/Tonne
TC	Transition to Curve Junction
TCTT	Tungsten Carbide Tamping Tool
TEX	Tamping Express
TLE	Track Laying Equipment
tm	Tonne Metre
TMM	Track Machine Maintainer
TMO	Track Machine Organization
TMS	Track Management System
TP	Telegraph Post
TRR	Through Rail Renewal
TRT	Track Relaying Train
TS	Transition to Straight
TSR	Through Sleeper Renewal
TT	Tamping tool
TXR	Train Examiner
UGC	University Grants Commission
UNIMAT	Points and Crossing Tamping Machine
UP/DN	Denote the nomenclature of Lines on Double/Multiple Line Sections
Up/Down	Track Identification on Double Line section
USA	United States of America
USFD	Ultra Sonic Flaw Detection
UTS	Ultimate Tensile Strength
UTV	Utility Track Vehicle
WST	Work Site Tamper
XEN	Executive Engineer
XEN/AXEN	Executive Engineer/Assistant Executive Engineer
XEN/AXEN/TM(D)	Executive Engineer/Assistant Executive Engineer/Track Machine (Depot)
XL	Cross Level
ZF gearbox	Gear Box manufactured by German Company ZF
ZMD	Zonal Maintenance Depots
ZMDI	Zonal Machine Depot Incharge
ZRTI	Zonal Railway Training Institute

Correction Slips Detail

S.No.	C.S. No.	Date	Para No.	Descreption	Page No.

Correction Slips Detail

S.No.	C.S. No.	Date	Para No.	Descreption	Page No.