भारत सरकार
रेल मंत्रालय
GOVERNMENT OF INDIA
MINISTRY OF RAILWAYS

रेलों एवं वैल्डों के पराश्रव्य परीक्षण हेतु नियमावली

MANUAL FOR ULTRASONIC TESTING OF RAILS AND WELDS

संशोधित–2022
Revised-2022

अनुसंधान अभिकल्प एवं मानक संगठन
लखनऊ–226011
Research Designs & Standards Organisation, Lucknow-226011

भारत सरकार
रेल मंत्रालय
GOVERNMENT OF INDIA
MINISTRY OF RAILWAYS

रेलों एवं वैल्डों के पराश्रव्य परीक्षण हेतु नियमावली

MANUAL FOR ULTRASONIC TESTING OF RAILS AND WELDS

संशोधित–2022
Revised-2022

अनुसंधान अभिकल्प एवं मानक संगठन
लखनऊ–226011
Research Designs & Standards Organisation, Lucknow-226011

PREAMBLE

Ultrasonic testing of rails was introduced over Indian Railways during early 60s. From a humble beginning, this technique has graduated itself to an extent that today it is one of the most powerful tools of preventive maintenance of the permanent way. During the last 60 years of its existence, a large number of testing procedures, specifications, guidelines and criteria have been issued from time to time based on the experience gained. In the meantime, the scope of testing has been extended to Alumino Thermic (AT), Flash Butt (FB), Gas Pressure (GP) welded joint, SEJs and Points and Crossings.

The advent of fracture mechanics concept coupled with state of the art steel making technology has thrown open a new dimension in the periodicity of ultrasonic examination. The rate of crack propagation and fracture toughness characteristics of rails can be experimentally found which determine the critical crack size.

Based on the above knowledge and experience, it was considered necessary to assimilate the entire information on ultrasonic examination of rails and present in the form of a manual so as to guide the ultrasonic personnel in testing, interpretation and decision-making. Accordingly, the first edition of the USFD Manual was prepared and issued during 1998. Subsequently, revisions were issued in 2006 and 2012 in view of the experience gained in the field of USFD testing and maintenance practices. In the recent part, USFD tesing machines having state of the art B-Scan digital technology with testing capability of 9 probes/channels per rail have been introduced on Indian Railways and since use of digital B-Scan USFD testing machine has been made mandatory on Group ‘A’ routes of Indian Railways, the USFD Manual also required to be updated so incorporate the sensitivity setting procedure for digital USFD tesing machines and other modifications. Provisions for Ultrasonic testing of Rails at Manufacturer’s works (Chapter-2) and Ultrasonic testing of rails by SPURT CAR (Chapter-12) have been deleted/ modified to avoid duplicity as detailed provisions have been incorporated and issued in separate relevant specifications e.g. IRST-12-2009(Indian Railway Standard Specification for flat bottom Rails-2009 with updated correction Slips) and IRST-52-2020 (lndian Railway Standard Specification for Ultrasonic Testing of Rails/Welds using Vehicular Systems Revised - 2020 with updated correction Slips). This revised edition is therefore prepared incorporating all the amendments and revisions. The provisions made are mandatory for all ultrasonic personnel and supersede all previous instructions in case they happen to be contradictory to the instructions contained in this manual. This revised version of the manual incorporates Correction Slip No. 1 to 6 to USFD Manual (2012).

LIST OF CHAPTERS

S.No.	Description	Page No.
1	Rail defects and their codification	1
2	Ultrasonic testing of rails at manufacturer's works (***Deleted***)	8
3	Ultrasonic rail testing equipment and accessories	9
4	Calibration, Sensitivity setting, Maintenance of machines and functions of Probes	12
5	Procedure to be followed by USFD operators for undertaking ultrasonic testing of rails	20
6	Need based concept in periodic USFD testing of rails and welds	22
7	Limitations of ultrasonic flaw detection of rails	26
8	Procedure for ultrasonic testing of Alumino-thermic welded rail joints	29
9	Ultrasonic testing of flash butt and gas pressure welded joints	40
10	Ultrasonic testing of rails required for fabrication of points & crossings	44
11	Ultrasonic testing technique of worn out point and splice rails prior to reconditioning by welding and switch expansion joint	47
12	Ultrasonic testing of rails by SPURT Car (***Deleted***)	52
13	Reporting and analysis of Rail/Weld failures	53

LIST OF ANNEXURES

Annexure No.	Description	Page No.
Annexure I	Sketch showing details of standard test piece for ultrasonic testing of symmetrical rail section (***Deleted***)	**54**
Annexure IA	Sketch showing details of standard test piece for ultrasonic testing of asymmetrical rail section (***Deleted***)	**55**
Annexure II A	Classification of Rail defects for Need Based concept of USFD	**56**
Annexure II B	Classification of Weld defects for Need Based concept of USFD	**61**
Annexure III	Proforma for reporting Rail/ Weld replacement or removal on detection by USFD	**64**
Annexure IV	Details required for Rail/Weld failure analysis	**68**
Annexure V	Check list of ultrasonic testing of Rail/Welds	**72**
Annexure VI	Master register for defects detected and Rail fractures	**74**
Annexure VII	Master register for defects detected and Weld fractures	**75**
Annexure VIII	Inspection of rail tester and work of PWI/ (USFD)	**76**

LIST OF FIGURES

Fig no.	Description	Page no.
Fig. 1	Arrangement of probes for testing of new rails in steel plants (***Deleted***)	78
Fig. 2A	Area covered by Normal (0^0)probe	79
Fig. 2B	Area covered by 70^0 probe	80
Fig. 2C	Area covered by 70^0, 2MHz probe (Testing for AT weld flange)	81
Fig. 2D	Area covered by 70^0 probes in various Gauge face corner defect detection equipment	82
Fig. 2E	Area Covered by 37^0 probe (For bolt hole cracks)	83
Fig. 2F	Bolt Hole without crack (37^0 probe)	84
Fig. 2G	Bolt Hole with crack in upper half (37^0 probe, Type 135,235)	85
Fig. 2H	Undetectable star cracks (37^0 probe) having rail gap joint	86
Fig. 2I	Rail having artificial defect for sensitivity setting by 37^0 probe	87
Fig. 3	Sensitivity setting block for 70^0 2 MHz (Centre,gauge face & Non gauge face) probes	88
Fig. 4	Standard rail with artificial flaws for checking of performance of rail testers	89
Fig. 5	Rail without flaw (0^0) probe	90
Fig. 6	Longitudinal horizontal split in head region (type 112, 212, 0^0 probe)	91
Fig. 7	Longitudinal Horizontal split in head web junction (type 1321-2321, 0^0 Probe)	92
Fig. 8	Vertical longitudinal split in head (type 113, 213, 0^0 probe)	93
Fig. 9	Side probing of rail head , without flaw	94
Fig. 10	Vertical Longitudinal split in head (0^0 side probing)	95
Fig. 11	Vertical longitudinal split in web (type 133, 233, 0^0 probe)	96
Fig. 12	Side probing of rail web without defect	97
Fig. 13	Vertical longitudinal split in the web 0^0 side probing	98
Fig. 14	Segregation (0^0 probe)	99
Fig. 15	Bolt hole without crack (0^0 probe).	100
Fig. 16	Bolt hole with crack (type 135, 235, 0^0 probe)	101
Fig. 17	Transverse defect (type 111, 211, 70^0 2MHz, forward probe).	102
Fig. 18	Transverse defect (type 111, 211, 70^0 2MHz, backward probe).	103
Fig. 19	Undetectable star cracks (0^0 probe)	104
Fig.20(a)	Standard AT welded rail piece with artificial flaws for sensitivity setting of ultrasonic equipment to examine AT welds.	105
Fig.20(b)	Standard AT welded rail piece with artificial flaws for sensitivity setting of ultrasonic equipment to examine 75mm wide gap AT welds	106
Fig.21(a)	Sketch showing the location of flange of rail for ultrasonic testing with 70^0, 2MHz angle probe	107
Fig.21(b)	Testing of bottom flange of A.T. welds using 70^0 and 45^0 Probes.	108
Fig.22(a)	Standard AT welded rail test piece (Half moon crack)	109
Fig.22(b)	Sensitivity setting using 45^0 tendem probe	110
Fig.22(c)	AT weld testing using 45^0 tendem probe.	110
Fig.23	Probe position for testing of Half moon crack with 45° probe	111

Fig no.	Description	Page no.
Fig.24(a)	Position of 45^0 angle probes and beam path for various flaw locations when examining the head of G.P & F.B.welds.	112
Fig.24(b)	Position of 70^0 angle probe and beam path for various flaw locations when examining the web and flange of G.P & F.B.welds	113
Fig. 25	Standard test rail piece for testing of rails before manufacturing of points and crossings.	114
Fig.26 (a)	Testing procedure for points and splice rails for 1 in 12 crossing BG 52 Kg.	115
Fig.26 (b)	Standard test piece (SEJ/ISEJ Stock Rail) showing beam direction of angle probes for sensitivity setting for 60kg rail section	116
Fig.26 (c)	Standard test piece (SEJ/ISEJ Stock Rail) showing beam direction of angle probes for sensitivity setting for 52kg rail section	117
Fig.27	Detail of probes used for testing of rails and welds	118
Fig.28	Sensitivity setting/Testing with 45^0 probe using Test Rig (for locations having scabs/wheel burns.)	119
Fig.29	Sensitivity setting block & ultrasonic scaning of tongue rail of SEJ. (Rail in Plan) (***Deleted***)	120
Fig.30	Typical signal pattern of bunch of moving signals for AT welds	121
Fig.31 to 56	Typical rail defects.	122 -135

CHAPTER 1

RAIL DEFECTS AND THEIR CODIFICATION

1.0 Rail is the most important and critical component of the permanent way. Most common cause of rail failure is the fatigue fracture, which is due to imperfections present in the material or due to crack formation during service. Thus successful performance of rails is based on their resistance to crack initiation and crack propagation. It is therefore essential to identify and classify the defects in rails and in turn initiate corrective action. A brief on nature of defects, their causes and classification is presented below.

1.1 Causes of defects:
The origin and development of such cracks is due to:

1.1.1 Material defects originating during the manufacturing process such as clusters of non-metallic inclusions, hydrogen flakes, rolling marks, guide marks etc. which may be present in spite of successful non-destructive tests carried out on the rails during quality assurance examination.

1.1.2 Residual stresses induced during manufacture (cooling, rolling, gas pressing and straightening).

1.1.3 Defects due to incorrect handling e.g. plastic deformation, scoring, denting, etc.

1.1.4 Defects associated with faulty welding i.e. gas pores, lack of fusion, inclusions, cracks etc.

1.1.5 Dynamic stresses caused by vertical and lateral loads particularly by vehicles with wheel flats or when the vehicle runs over poorly maintained rail joints etc.

1.1.6 Excessive thermal stresses due to variation in rail temperature beyond specified limits.

1.2 Defect location:
In order to study the fractures in rail systematically, they may be divided into the following categories based on their location of occurrence in the rail length:

(a) Defects emanating from the rail end or reaching the end of the rail.

(b) Defects observed within fish-plated zone.

(c) Defects not covered in (a) and (b).

1.2.1 Nature of defects in rails:

a. ***Horizontal crack in head*:**
These cracks run usually parallel to the rail table at a depth of 10-20 mm and may finally split the material layer. Crushing of the railhead may also be observed in the vicinity of the crack. Clusters of non-metallic inclusions and abnormal vertical service stresses are the factors responsible for this defect. USFD can easily detect such flaws.

b. ***Vertical-longitudinal split in head*:**
These cracks run parallel to the longitudinal axis of the rail and are caused by presence of non-metallic inclusions, poor maintenance of joints and high dynamic

stresses. It cannot be easily detected in early stages by USFD due to their unfavourable orientation.

c. ***Horizontal crack at head web junction*:**
Such flaws may lead to rail head separation. Contributory causes are wheel flats, bad fish-plated joint, inclusions and high residual stresses. USFD is sensitive to such defects and can easily detect them.

d. ***Horizontal crack at web-foot junction*:**
Such cracks develop both towards head and foot. They are caused by high vertical and lateral dynamic loads, scoring and high residual stresses. USFD can easily detect these flaws.

e. ***Vertical longitudinal splitting of the web*:**
It is primarily due to heavy accumulation of non-metallic inclusions and wheel flats. USFD conducted from rail top can detect it only if the defect is severe and in an advanced stage. Vertical longitudinal defects of minor nature are not amenable to USFD examination conducted from rail top. Probing from railhead sides can detect such defects for which hand probing may be essential.

f. ***Bolt hole crack*:** Such cracks often run diagonally and may run towards head or the foot. They result from inadequately maintained joints and unchamfered fish bolt holes and stress concentration. USFD (37^0 probe) can easily detect these cracks. Normal probes provide indication as diminished back wall echo.

g. ***Transverse fracture without apparent origin*:**
These fractures occur suddenly, especially during winter and may emanate from microscopic flaws (embedded or on surface) and are generally very difficult to detect by USFD. These minute flaws manifest suddenly under severe service conditions or when the fracture toughness values are comparatively low.

h. ***Transverse fatigue crack in head:***
They resemble a kidney in shape in the railhead and USFD is ideally suited for detecting them. They are generally inclined at the angle of 18°-23° and originate at a depth of 15-20 mm below the running surface. Mainly hydrogen accumulation and non-metallic inclusions cause this defect. These cracks are easily detected by 70° probe.
When such defects are nearly vertical, they can be detected using additional gain of 10dB. Defects lying below scabs/wheel burns can be detected by 45° side probing of rail head.

i. ***Horizontal crack at top and bottom fillet radius:***
These cracks are caused by accumulation of non-metallic inclusions and high residual stresses introduced at the time of rail straightening. These are difficult to be detected by USFD.

j. ***Vertical – longitudinal crack in foot*:**
Such cracks develop from sharp chamfers on the bottom surface of the rail foot. Cracks occurring in this way are the points of origin of transverse cracks in the foot.

k. ***Transverse cracks in rail foot*:**
Due to localised overheating during FB welding, structural changes in the bottom surface of the rail material takes place which result in a minor crack. These cracks under the tensile loading give rise to brittle fracture. Such defects are not detectable by USFD. Transverse cracks originated from AT welds in the rail foot grow as half moon and are detectable by 45° probe.

1.2.2 ***Nature of defects in welds***:
Joining rails by improper welding may introduce a variety of defects on the joints as well as in the heat affected zone (HAZ) e.g. lack of fusion, cracks, porosity, slag inclusion, structural variation, etc. The quality of weld depends to a large extent on the careful execution of the welding operation. USFD testing done by manual rail tester suffers from following deficiencies:

(i) Full cross section of weld is not covered by normal USFD examination using manual tester thereby leaving areas in head and foot, which may have flaws.

(ii) Micro structural variations in the weldment cause attenuation of ultrasonic energy.

Therefore, a separate testing procedure for welds has been developed which is elaborated in Chapters 8 and 9.

1.2.2.1 Defects in Flash Butt Welds:

(a) Transverse cracks: The origin of these cracks is the imperfection in the weldment such as lack of fusion, inclusions, etc. Fracture usually occurs from these imperfections, which may be in railhead, web or foot. During the course of its propagation USFD testing is extremely effective.

(b) Horizontal cracks: These cracks develop in the web and propagate both in head and foot. The principal cause is large tensile residual stresses acting in the vertical direction.

1.2.2.2 Defects in Alumino-Thermic (AT) Welds:

(a) **Transverse crack in head and foot:**
It is caused by inclusions entrapped during welding, which leads to crack initiation on the foot and its growth in the web region causing fracture. Such cracks can be detected by USFD.

(b) **Horizontal cracks in web:**
These cracks occur in AT welds in which the ends having bolt holes have not been removed. The presence of holes result in unfavorable stress distribution caused due to non-uniform cooling. USFD can easily detect such flaws.

1.3 Codification of rail and weld defects:
Information regarding the type and nature of rail failures and their service conditions is primarily obtained through personnel responsible for maintenance of permanent way and it is of utmost importance that they are familiar with the various types and nature of rail defects and their possible causes to enable them to report the rail failures accurately. With

this objective in view, it is necessary to devise a suitable coding system for reporting rail failures.

1.3.1 UIC has adopted an Alphanumeric system of codification of rail failures:
In view of its international status and the facility afforded for computerized statistical data analysis, this system has been adopted by Indian Railways for reporting rail failures. The code for reporting rail failures consists of two parts viz first – Alphabetic, consisting of three code letters and second numeric, consisting of three or four digits.

1.3.1.1 First part of the code – Alphabetic

(a) First code letter indicates the type of rail:

O	indicates	Plain rail
X	indicates	Point & crossing rail

(b) Second code letter which follows the first code letter, indicates the reasons for withdraw of rail. Thus,

F	indicates	Fractured rail
C	indicates	Cracked rail
D	indicates	Defective rail other than F&C

(c) Third code letter which follows the second code letter, indicates probable cause of failure or rail. Thus:

R	indicates	Cause inherent in rail (attributable to faults in the steel making stage and / or its rolling into rails).
S	indicates	Fault of rolling stock
C	indicates	Excessive corrosion
J	indicates	Badly maintained joint
M	indicates	Other maintenance conditions (Defects which develop due To ineffective maintenance or delayed renewal of rails).
D	indicates	Derailment
W	indicates	Associated with welding defects (through or adjacent Within 100 mm of a welded joint)
O	indicates	Other causes

1.3.1.2 ***Second part of the code – Numeric:***
This part of the code consisting of three or four digits indicates the location of the failure in the rail as well as its characteristics:

(a) The first digit indicates the location of rail failure (head, web or foot)

(b) The second digit indicates:

(i) The position in the rail section from which failure has started except where failure is associated with welding.
(ii) In case of welding, the second digit indicates the type of welding.

(c) The third digit is interpreted in relation to the first two digits of the code viz :

(i) If failure is due to internal defect (first digit 4 or second digit 1, 3 or 5), it shows the direction of the crack or fracture.

(ii) If failure is due to surface defect (second digit 2 or 5), it indicates the nature of defect.

(iii) If failure is by damage (first digit 3), it indicates the cause of the damage (details have been given in succeeding pages)

(d) The fourth digit gives further details.

1.3.1.3 The summary of codification of rail and weld failures is given as under:

(a) First Part – Alphabetic codes

1st letter	2nd letter	3rd letter
Type of rail	Reason for withdrawal	Probable cause of failure
O-Plain rail X-Points & Crossings rail	F-Fractured C-Cracked D-Defect other than F&C	R-Inherent in rail
		S-Fault of rolling stock
		C-Excessive corrosion
		J-Badly maintained joint
		M-Other maintenance conditions
		D-Derailment (failure developed later)
		W-Associated with welding
		O-Other causes

(b) Second Part – Numeric codes

1st digit	2nd digit	3rd digit	4th digit
Location & characteristics	Origin/Type Of welding	i) For internal defects in welding shows direction: if 2nd digit 1,3,5.	Further details
1.Within fishplate limit	0. Unknown 1.Within head	1. Transverse 2. Horizontal 3. Vertical longitudinal	1. At rail seat 2. Not at rail seat 1. Top fillet 2. Bottom fillet 3. Not at fillet radius
2.Other location	2. Surface of rail head 3. In web 5. In foot	5. Diagonal at hole 8. Diagonal not at hole ii) For surface defects it shows nature of defects if second digit 2,3,5.	
		0. Corrugation	1. Short pitch 2. Long corner
		1. Shallow surface defect 2. Breaking out 3. Crushing continuous 4. Battering local 5. Wheel burns	1.Running surface 2.Gauge corner 1. Isolated 2. Repeated
		9. Lap, seam, roll mark	

1st digit	2nd digit	3rd digit	4th digit
3.Damage done	0	1 Brushing or arcing 2 Incorrect machining drilling or flame cutting	
4.Associated with welding	Type of welding 1. Flash butt 2. Thermit 3. Electric arc joint 4. Oxy-acyty-lene joint 7. Building up 8. Traction bond	Direction of fracture 1. Transverse 2. Horizontal 5. Diagonal at hole 8. Diagonal not at hole	
5.Corrosion	0	0	

1.3.1.4 On the basis of the system of classification described in **para 1.3.1.2**, a list of the failure code group to be followed is given as under, along with the meaning of the codes.

Within fish-plate limits	Elsewhere on rail	Description
(1)	(2)	(3)
100	200	Transverse breakage without apparent origin (i.e. sudden fracture)
111	211	Internal flaw in head, transverse breakage.
112	212	Internal flaw in head, horizontal crack.
113	213	Internal flaw in head, vertical longitudinal split.
1211	2211	Head, surface, shallow surface defect (flaking)
1212	2212	Head, surface, shallow surface defect (line).
1221	2221	Head, surface, breaking out running surface (scabbing)
1222	2222	Head, surface, breaking out, gauge corner (shelling)
123	223	Head, surface crushing or battering
124	224	Head, surface local batter
-	2251	Head, surface, wheel burn isolated
-	2252	Head surface, wheel burn repeated
1321	2321	Web, horizontal cracks, at top fillet radius
1322	2322	Web, horizontal crack, at bottom fillet radius
1323	2323	Web, horizontal crack, not at fillet radius
133	233	Web, vertical longitudinal splitting (pipe)
135	235	Web, cracks at hole
-	238	Web, diagonal cracks not at hole.
139	239	Web, lap.
1511	2511	Foot, transverse break at rail seat.
1512	2512	Foot transverse break starting away from rail seat.
153	253	Foot vertical longitudinal split (halfmoon crack)

Within fish-plate limits	Elsewhere on rail	Description
301	-	Damage to rail by brushing or arcing.
302	-	Damage to rail by bad machining, drilling or flame cutting
411	-	Welding,flashbutt joint, transverse crack
421		Welding, thermit joint, transverse crack
422	-	Welding, thermit joint, horizontal crack.
431	-	Welding, electric arc joint, transverse crack
441	-	Welding oxyacetylene joint transverse crack.
471	-	Welding, building up transverse cracking of head across the built up portion.
472	-	Welding, building up, built up part breaks away.
481	-	Welding, traction bond welding crack, at weld
500	-	Corrosion.

1.4 Typical rail/weld failure photographs with their codes are given in **Figs. 31 to 56.**

***

CHAPTER 2

ULTRASONIC TESTING OF RAILS AT MANUFACTURER'S WORKS

----------Deleted----------

CHAPTER 3

ULTRASONIC RAIL TESTING EQUIPMENT AND ACCESSORIES

3.0 Ultrasonic testing of rails is a specialized activity and the inspectors carrying out the ultrasonic testing of rails shall be trained by RDSO, in the techniques of USFD testing. Each Zonal Railway shall create adequate no. of Ex-cadre post of inspectors to ensure that entire track length in their jurisdiction is ultrasonically tested at the laid down periodicity.

When ultrasonic testing of rails and welds is outsourced to a service providing agency, compliance to provisions of latest version of Indian Railway Standard Specification for Ultrasonic Testing of Rails (Provisional) with correction slips issued up to date shall be ensured.

3.1 On Indian Railways, flaw detection by ultrasonics is carried out with the help of two different types of equipments viz. Single rail tester and double rail tester. The single rail tester has been utilised on Indian Railways for over 40 years and the double rail tester is of a relatively recent origin (developed Ten years back). In addition hand testers of some designs are also being used. Current list of RDSO approved sources for ultrasonic rail/weld testers with their respective models is contained in latest version of 'Masters list of approved venders' circulated bi- annually by Quality Assurance (Mechanical) Directorate of RDSO. Procurement of USFD equipments should be done only from the RDSO approved sources.

3.1.1 Total Life of USFD machine is approximately 8 years.

3.1.2 Maintenance spares be procured along with the machine and should be as per **para 4.4** pertaining to maintenance spares.

3.2 **Single rail tester:** Single rail tester is capable of testing only one of the rails at a time and is provided with nine probes i.e. 0^0, 70^0 Center Forward (CF), 70^0 Center Backward (CB), 70^0 Gauge Face Forward (GF), 70^0 Gauge Face Backward (GB), 70^0 Non-gauge face Forward (NGF), 70^0 Non-gauge Face Backward (NGB), 37^0 Center Forward (CF) and 37^0 Center Backward (CB). The normal probe (0^0) is utilised for the purpose of detecting horizontal defects situated in head, web or foot. The 70^0 probe has been specifically provided for detecting defects in the rail head, the most typical of which is the transverse fissure or kidney fracture. 37^0 probes have been provided to find out defects originating from the bolt hole (star cracks). The approximate coverage of the rail section with the help of the above arrangement is indicated in **Fig.2A, 2D & 2E**. However, this coverage area does not indicate that detectability of same size of transverse defect whose nuclei lies within this area at different places will be displayed in same manner. It will depend upon the size, orientation and depth of the defect.

The signal received from the defects by any of the above probes is indicated on the screen. In order to find out the origin of detection i.e. which probe has picked up the defect, provision for displaying the individual probe operation along with audio alarm/LED display has been made in the equipment.

3.3 **Double Rail tester:**

3.3.1 The double rail tester is capable of testing both the rails at a time. For each rail, nine probes have been provided for the present i.e. 0^0, 70^0 Center Forward (CF), 70^0

Center Backward (CB), 70^0 Gauge Face Forward (GF), 70^0 Gauge Face Backward (GB), 70^0 Non-gauge face Forward (NGF),70^0 Non-gauge Face Backward (NGB), 37^0 Center Forward (CF) and 37^0 Center Backward (CB).

The signal received from the defects by any of the probes is indicated on the screen. In order to find out the origin of detection i.e. which probe has picked up the defect, provision for displaying the individual probe operation along with audio alarm/LED display has been made in the equipment.

3.3.2 The normal probe is provided for detection of horizontal defects and 70° probes have been provided for transverse defects in the head. For detection of bolt hole defects, the equipment works on the principle of backwall drop, which in the event of a bolt hole crack shows reduction in echo-amplitude of the backwall. It is also supported by separate audio alarm with distinctly different tone and LED display.

3.3.3 The introduction of double rail tester has been specifically made for enhancing the productivity of testing and as well as improving the quality and accuracy of flaw detection. Due to pre-calibrated arrangement, frequent setting of the equipment is not considered necessary.

3.3.4 Due to frequent misalignment of probes on the fishplated joints and limitations of detection of bolt hole cracks having unfavourable orientation and size, it is desirable to deploy double rail testers on LWR/CWR sections.

It is desirable to deploy only the 'single rail tester' ultrasonic testing machine for testing of sections other than LWR/CWR.

3.4 Specification of rail testers

3.4.1 The single and double rail testers shall be procured to RDSO specification. The responsibility of inspection for these equipment rests with Director General, RDSO.

3.5 Types of probes:

Following types of probes other than mentioned in **para 3.2 and 3.3** are also in use. Details of probes and their uses are given at **Fig. 27**.

45^0, 2MHz probe	For testing Gas Pressure, Flashbutt Welded rail joints and half Moon Defect in AT Welds below web foot junction and SEJ. Tandem Scanning (2 Nos. of 45^0 probes in a rig) for detection of lack of fusion in AT welded rail joints.
70°, 2MHz probe 20mm circular (or 20mm x 20mm square crystal)	Flange & Head testing of AT welds
70^0,2MHz Side looking probe (SLP)	Half Moon defect in AT welds below web foot junction.

3.6 Test rig for wheel burnt/scabbed rails:

For detection of transverse flaws in rail head when rail top surface is having wheel burns/scabs, a test rig with two 45^0 probes sending beam inward shall be used as shown in **Fig. 28**. The distance between probe index marks in the rig shall be adjustable and kept as 134 mm and 145 mm for 52Kg and 60Kg rails respectively while testing. For other rail

sections this distance can be computed by multiplying rail head width at 20 mm from rail top by 2.

3.7 Tandem rig for AT weld testing:

For detection of vertically oriented defects in AT welds like lack of fusion, a tandem test rig with two 45° probes shall be used as shown in **Fig. 22 (b)** and **(c).**

CHAPTER 4

CALIBRATION, SENSITIVITY SETTING, MAINTENANCE OF MACHINES AND FUNCTIONS OF PROBES

4.1 Rail testing by ultrasonic method shall be carried out by RDSO approved single rail testing trolley or double rail testing trolley and rig for 45^0 probes. Details of frequency and number of each type of probes are as under:

Type	**Frequency**	**No. of probes**		
		Single Rail Tester	**Double Rail Tester**	**Rig**
Normal/0^0	4MHz	One	One for each rail	-
70^0 (Center)	2MHz	Two(F+B)	Two (F+B) for each rail.	-
70^0 (Gauge Face)	2MHz	Two(F+B)	Two (F+B) for each rail.	-
70^0 (Non-gauge Face)	2MHz	Two(F+B)	Two (F+B) for each rail.	-
45^0 (Rig testing)	2MHz	-	-	Two
37^0 (Center)	2MHz	Two(F+B)	Two (F+B) for each rail.	-

Water is used as couplant while testing with Single Rail Testers/Double Rail Testers. This is supplied through a water container attached with the trolley. Soft grease to RDSO Specification No.WD-17-MISC.-92 or WD-24 Misc.-2004/ any thick oil of high viscosity grade (having viscosity grade of 150 cst or more) is to be used as couplant while undertaking hand probing of AT welds and deploying 45° probes with test rig for testing rail at scabbed/ wheel burnt locations. The list of approved vendors for soft grease to above mentioned specification is accessed through IREPS (https://ireps.gov.in) which can be seen through login id, password & digital key.

4.1.1 The procedure laid down for ultrasonic testing of rails is broadly divided in the following steps:

a) Visual inspection of Equipments and accessories

b) Calibration of equipment

c) Sensitivity setting of the equipment and probes

d) Checking of the equipment characteristics

e) Testing and interpretation

a) Visual inspection of Equipments and accessories - Daily check

Ultrasonic equipment is to be inspected daily before start of work as per para 5.1.1.

b) Calibration of Digital USFD:

The range calibration in digital SRT/DRT with multiplexure/ multichannel unit is to be undertaken as follows:

I Calibration for 300 / 200 mm longitudinal wave using 0˚ Double Crystal probe

i. Connect the 0˚ / 4 MHz Double Crystal probe to requisite channel given in multiplexure or in the unit itself.
ii. Select Mode T-R i.e. Double Crystal/ Multichannel mode in Rail Tester having multiplexure. For multichannel unit, select the calibration set which is required to calibrate.
iii. Feed the required range i.e 300 mm for rail tester having multiplexure/ 200 mm for multichannel rail tester.
iv. Put 0˚ Double Crystal probe on IIW (V1) Block after applying couplant at 100 mm width side.
v. Set Delay and Probe Zero (in unit having multiplexure) as per operational manual.
vi. Set first reflected peak at 3.3 div (if range is selected 300 mm) or at 5.0 (if range is selected 200 mm) using delay key provided in multiplexure or DELAY parameter provided in multichannel unit. Place Gate over it. Press measure 0 (in unit having multiplexure) and read the beam path, depth shall be 100 mm.
vii. Second reflected peak will appear at 6.7 & third peak at 10.0 (if range is selected 300 mm) or second peak at 10.0 (if range is selected 200 mm) .
viii. If last peak is not at 10.0, velocity may be adjusted to set the last peak at 10.0 (if velocity control available) or by delay key on multiplexure.
ix. The equipment is calibrated for 300 /200 mm longitudinal wave for 0˚ Double Crystal probe.
x. To verify the calibration put probe on top of rail head, the back peak position will be at 5.2 for 52 Kg. rail & at 5.7 for 60 Kg. rail (if range is selected 300 mm) or at 7.8 for 52 Kg. rail & at 8.6 for 60 Kg. rail (if range is selected 200 mm).

II 165 mm Direct Shear wave calibration for 70˚ / 2 MHz single Crystal Probe

i. Connect the 70˚ / 2 MHz Single Crystal probe to requisite channel given in multiplexure or in the multichannel unit itself.
ii. Select Mode T-R i.e. Double Crystal mode for rail tester having multiplexure. For multichannel equipment, select the calibration set and channel required to calibrate.
iii. Feed range 300 mm for rail tester having multiplexure or 165 mm SW for multichannel unit.
iv. Set Delay and Probe Zero (in unit having multiplexure) as per operational manual
v. Put 70˚/2 MHz Single Crystal probe on IIW (V1) Block after applying couplant and direct the beam towards 100 mm curvature.
vi. Move the probe slightly to and fro to get maximize signal.
vii. Adjust the peak at 6.0 using delay key provided in multiplexure or DELAY parameter provided in multichannel unit.
viii. Place the gate over this peak, press measure 70 (in unit having multiplexure) and read the beam path it shall be 100 mm.
ix. To verify the calibration, Direct the probe towards 25 mm curvature and maximize the peak.
x. Put the gate on this peak, the beam path shall be 25 mm.
xi. The equipment is calibrated for 165 mm shear wave.

III 275 mm Direct Shear wave calibration for 37°/2 MHz Single Crystal Probe

i. Connect the 37^0 /2 MHz Single Crystal probe to requisite channel given in the USFD equipment.
ii. Select the calibration set and channel required to calibrate. Feed range 275 mm Shear wave in USFD equipment.
iii. Put 37°/2 MHz Single Crystal probe on IIW (V1) Block after applying couplant and direct the beam towards 100 mm curvature.
iv. Move the probe slightly to and fro to get maximize signal.
v. Adjust the peak at 3.6 div. using delay or probe zero parameter provided in USFD equipment.
vi. Place the gate over this peak and measure the beam path it shall be 100 mm. Slight adjustments can be also done for correct measurement by gate.
vii. To verify the calibration, direct the probe towards 25 mm curvature and maximize the peak.
viii. Put the gate on this peak, the beam path shall be 25 mm.
ix. The equipment is calibrated for 275 mm shear wave.

c) Sensitivity setting of the equipment and probes– Check once every 3 days

The sensitivity of the USFD equipment shall be set up once every 3 days with the help of standard rail pieces as mentioned below:

Sensitivity (gain) setting: For the sensitivity setting of ultrasonic equipment and the probes, the following sequence is to be maintained:

i) For sensitivity setting of 0^0 probe and 70^0 probe, place the testing trolley on the standard rail piece having artificial flaws as shown in **Fig. 3**. Check the alignment of probes to make sure that 70^0 Central probe & 0^0 probe travel centrally in line with the axis of the rail head & web. 70^0 GF & 70^0 NGF probes shall be aligned towards GF & NGF respectively at appropriate positions. For sensitivity setting of 37^0 probe, place the testing trolley on the standard rail piece having artificial flaws as shown in **Fig. 2(I)**. Check the alignment of probes to make sure that 37^0 Central probe travel centrally in line with the axis of the rail head & web.
ii) Set the acoustic barrier of the normal probe at right angle to the longitudinal direction of rail.
iii) Open the water nozzle and regulate water flow on the probes at an optimum speed.
iv) While testing on single line section and 'D' marked rails on double / multiple line section, additional gain of 10db is to be employed.

d) Checking of equipment characteristics– Monthly check

The characteristics of the equipment shall be checked at least once in a month according to IS:12666 – 88.

The following characteristics shall be checked:

i) Linearity of time base of flaw detector
ii) Linearity of Amplification of flaw detector
iii) Penetrative power
iv) Resolving power
v) Probe Index
vi) Beam angle

In a month all parameters shall be checked with 0^0/2-2.5 MHz single crystal probe, as per IS:12666-88 or its latest version.

e) **Testing and Interpretation:** After sensitivity setting, actual testing of rails is to be carried out and interpreted for follow up actions.

4.1.2 Checking the function and sensitivity of probes

(a) **Normal Probe:**
The back wall echo will be adjusted by gain control of USFD tester to 100% of full screen height and the same shall be taken as reference echo.

(b) **Angle probe 70° (Center forward & Center backward**):
The equipment shall be able to detect 12 mm dia. hole for need based criteria in the head portion of the standard rail as shown in **Fig. 3** by both forward and backward probes. The amplitude of the flaw shall be set to 3 div. i.e. 60% of screen height. This adjustment shall be done by individual potentiometer provided in the junction box.

While testing on single line and 'D' marked rails on double/multiple line section, additional gain of 10dB is to be employed.

Rail defects be classified in accordance with Annexure-IIA, Item 3 (IMR/OBS). However, when defect signal is exhibited at a weld while testing with increased gain of 10dB, the classification of defect in accordance with Annexure-IIB, item 2 (IMRW/OBSW) shall be done based on signal pattern obtained after reducing the gain by 10dB. Thus, increased gain of 10dB for single line and 'D' marked rails on double/multiple line shall not be employed for classification of defect in weld head.

(c) **Gauge Face and Non-gauge Face Corner probe 70° (Forward and backward)**
The trolley is moved on the standard test piece having 5 mm Flat Bottom Hole (FBH) made by use of suitable machine (e.g. Electric Discharge Machine) ensuring truly flat surface on bottom of the hole as shown in **Fig. 3**. The beam of 70° forward gauge face and non-gauge face corner probe is directed to 5 mm FBH in rail head. Signals from rail end surface and 5 mm FBH will appear on the screen. Move the trolley forward and backward very slowly to get the maximum signal amplitude from the 5 mm FBH and adjust the gain to get 60% of full height. Same procedure shall be adopted for 70^0 backward gauge face and non-gauge face corner probe also.

(d) **45° probe (for locations having scabs/wheel burns):**
Machine shall be calibrated for 165 mm range for shear wave in the same manner as per procedure given at **para no. 4.1.1 (b) II** on the rail of same sectional weight under test. The test rig shall be placed at 20 mm below rail table on the side of rail head. The transmitter and receiver probe in the test rig shall be in opposite direction and shall be apart twice the rail head width. Peak obtained in receiver probe shall be adjusted to full scale height by gain setting. Testing of rails shall be done by keeping index mark of probe 20 mm below rail table. Testing frequency and classification of defects shall be as per provisions of Para **6.6.1.1** and **6.3** respectively. **Note:** For 52Kg and 60Kg rails the peak of received signal shall

appear at approximately 95 mm (shear wave) and approximately 103 mm (shear wave) respectively.

(e) For sensitivity setting of channels with 37^0 probes (C/F & C/B) in SRT/DRT, the trolley should be moved on Standard Rail piece with bolt hole and 5 mm saw cut as shown in Fig. 2(I). Two signals will appear, one from bolt hole and another from 5 mm saw cut. The signals of bolt hole with maximum amplitude will appear at 4.0 Div. & 3.6 Div. (approx. on Horizontal scale) for 60 Kg & 52 Kg Rail sections respectively. The signals of 5 mm saw cut, with maximum amplitude, will appear at 5.0 Div. & 4.6 Div. (approx. on Horizontal scale) for 60 Kg & 52 Kg Rail sections respectively. The gain level has to be adjusted to get 60% of full screen height (Vertical scale) from 5 mm saw cut. The same sensitivity setting method shall be done for both channels of 37^0 probes (C/F & C/B) using two nos. of 5 mm saw cut of standard rail piece as per Fig. 2(I). Standard Rail piece with bolt hole and 5 mm saw cut as per drawing/dimension given in Fig. 2(I) shall be of 300 mm with artificial bolt hole crack in center. This test piece shall be submitted to RDSO for sensitivity setting as a standard test piece. However the standard piece approved by RDSO shall have to be kept at center in between two rail pieces of same rail sections of 1 m length each as per Fig. 2(I). These 1 m length rail pieces will be provided by zonal railways for the purpose of sensitivity setting only during testing of rail to agency.

<u>Note</u>: Procedure to be followed for adjustment in sensitivity setting on account of variation in rail temperature:

Following procedure shall be used for adjustments in sensitivity setting of Ultrasonic Rail tester on account of variation in rail temperature before starting the testing of rails.

(a) Switch on the Ultrasonic rail tester and keep the equipment for two minutes for thermal acclimatization of the component of the equipment before starting the adjustment in sensitivity setting operation.

(b) In the Morning at 8.00 hrs.

i. Normal Probe:
Set the sensitivity of the equipment as per **Para 4.1.2(a)** and note the gain required to setup the amplitude of the signal to 60% of full screen height.

ii. Angle probe 70 degree (Forward and Backward):
Set the sensitivity of the equipment as per **Para 4.1.2(b)** and note the gain required to set up the amplitude of the signal to 60% of full screen height.

iii. Angle probe 70° Gauge Face and Non-gauge Face Corner probe (Forward and backward):
Set the sensitivity of the equipment as per **Para 4.1.2(c)** and note the gain required to set up the amplitude of the signal to 60% of full screen height.

iv. **Angle probe 37^0 (Forward & backward):** Set the sensitivity of the equipment as per **Para 4.1.2 (e)** and note the gain required to set up the amplitude of the signal to 60% of full screen height.

v. Note the rail temperature.

(c) After setting the sensitivity of the probes, the ultrasonic rail tester shall be retained on the standard rail test piece in ON condition and the signal amplitude of individual probe set as per above procedure, shall be checked on hourly basis. If the drop in the signal is observed then the drop shall be compensated by applying extra gain with use of gain control (dB). The height of signal amplitude is maintained to 60% of full screen height. Note the change in rail temperature from rail temperature at 8.00 Hrs. and corresponding extra gain used.

(d) **Actual Testing:**
During actual testing on the track, the gain set by the above procedure shall be maintained depending upon the time and rail temperature during testing. Any variation in the signal amplitude shall be compensated by giving measured extra gain (dB) as per step (c) above to carry out ultrasonic testing.

(e) **Periodicity of setting the sensitivity:**
The above procedure for sensitivity calibration against temperature variation shall be carried out at least once in a month. The adjustments in sensitivity setting of ultrasonic equipment in respect of gain (dB) shall be employed accordingly.

4.2 Machine Maintenance- Repairs and Half yearly Schedule Maintenance:
The manufacturer shall guarantee the satisfactory performance of the entire rail tester system for a period of one year from the date of commissioning of the equipment by the supplier.

For proper maintenance after expiry of the guarantee period, railway should make proper arrangements for half yearly repairs of electronic and mechanical parts either under AMC with the manufacturer of the equipment or may develop suitable departmental facilities.

Each Zonal railway should create centralised depots for carrying out mechanical repairs and checking the Characteristics of the equipment etc., at least, once in a month.

4.3 Sectional AEN should spent at least few hours (min. two hours) each month during his routine trolley inspection with USFD team and cross check the working including accuracy/ sitting/calibration of USFD machines. In addition, the SE and SSE (in-charge) should also associate themselves occasionally.

4.3.1 The officer having technical control over the SE/JE (USFD) shall exercise regular checks as per **Annexure-VIII** of USFD Manual once in between two successive half yearly maintenance schedule carried out in the maintenance depots.

4.4 Spares:

The recommended spares for normal maintenance of the equipment are given below:

Sl. No.	Item	Number
1.	0^0 , 4MHz Double crystal probe	8 Nos.
2	0^0 2MHz Double crystal probe	4 Nos.
3	70^0 (F&B) Probe 2 MHz Single crystal	8Nos.
4	45^0 2 MHz Single crystal probe	2 Nos.
5	70^0 2MHz Single Crystal Probe	6 Nos.
6	70^0 2 MHz single crystal probe SLP	2 Nos.
7	Connecting Cable (Flaw Detector. with junction box)	6 Nos.
8	BNC connector	6 Nos.
9	0^0 2/ 2.5 MHz Single Crystal Probe	2 No.
10	Battery charger	1 no.
11	IIW Block (as per IS: 4904)	2 per depot
12	60x50x50 mm steel block (as per steel grade 45C8 to IS:1875-1992)	1 No.
13	Fuse	12 Nos.
14	Step gauge	1 No.
15	37^0 (F&B) probe 2 MHz Single crystal	8 Nos.

Besides the above, the "spare" shall also include probe holder, probe shoes, wheel drum and wheel tyre. The procurement of spares for a machine shall be done from Original Equipment Manufacturer (OEMs) of that machine only, in order to ensure compatibility of spares with the machine and to achieve consistent and assured quality of testing. However, mechanical spares of trolley, standard items such as, battery, battery charger etc. can be procured from open market also. Spare batteries shall be arranged as and when expecting back up time of battery becomes low.

4.5 Defects detectable by different probes

a) 0° / Normal probe

i) Horizontal split in head due to presence of seams (type 212)
ii) Horizontal split in head-web and web foot junction due to presence of rolling seams (type 2321, 2322).
iii) Vertical longitudinal split in rail head and web due to presence of internal seams and pipes (type 213, 233)
iv) Bolt hole crack (type 135, 235)
v) Segregation in head and web junction
vi) Flakes (type 1211, 2211)
vii) Web-lap (type 239)

b) 70^0 angle probe

i) Transverse fissure (type 211) due to presence of mostly shatter cracks and some time due heavy inclusions.
ii) Transverse cracks originating from surface defects like scab (type 1221, 2221)
iii) Wheel burns (type 2251, 2252)
iv) Shelling cracks (type 1222, 2222)

c) 45° angle probe

i) Transverse cracks lying below scabs/ wheel burns

Typical indications received for various types of defects are indicated in **Fig. 5 to 18**. (For 52 Kg. rail section, 300mm. depth range, longitudinal wave calibration).

d) 37^0 angle probe

i) Bolt hole cracks (type 135, 235)

CHAPTER 5

PROCEDURE TO BE FOLLOWED BY USFD OPERATORS FOR UNDERTAKING ULTRASONIC TESTING OF RAILS

5.1 USFD operators must adhere to the following instructions:

5.1.1 Before testing

i) Check the battery condition before start of work. Only fully charged battery is to be used during testing.

ii) Check proper functioning of all controls of electronic unit i.e. depth range, gain, reject etc.

iii) Check proper functioning of trolley and probes.

iv) Check junction box, water outlet, probe cable contact and ensure smooth movement of trolley wheels.

v) Maintain proper gap between probing face and probe shoe (0.2 mm). Check with the help of a feeler gauge.

vi) Check probe alignment by keeping the rail tester on the rail.

vii) Calibrate the instrument weekly as per procedure given in para 4.1.1(b).

viii) Set the equipment for proper sensitivity as per para 4.1.1(c).

5.1.2 During testing

i) Conduct test as per procedure mentioned in Chapter 6.

ii) Maintain proper alignment of all probes during testing, otherwise false echoes may appear.

iii) Ensure adequate supply of water for coupling.

iv) Check proper functioning of 70^0 probes and 37^0 probes by touching the probe bottom with fingers. Noise pattern should appear on the screen.

v) Look out for back wall echo corresponding to normal probe throughout testing.

vi) Lift the machine at crossings/change of rail table height at joints to protect the probes.

vii) Mark the locations found defective as per classification.

5.1.3 After testing

(i) Maintain proper record of testing, observations, echo pattern and echo amplitude of defects in the register in the following format. The details should be supplemented with A-Scan recorded during testing.

Section Line… Km from Km to…. Date of testing…	S. No.	Loca-tion (Km)	Roll-ing mark	Rail/ weld No. & LH/ RH	Defect position (head/ web/foot)	Defect indicated by (0^0/70^0 /45^0 /37^0 Probe)	Nature of echo (shift /fixed)	Echo amplitude/ Travel		Classification		Remarks
								Previous	Present	Previous	Present	

(ii) Charge the battery after every day's work.

<u>IMPORTANT</u>

YOUR ULTRASONIC TESTER IS A DELICATE ELECTRONIC EQUIPMENT. TAKE ALL POSSIBLE CARE DURING HANDLING, TRANSPORTATION AND STORAGE TO AVIOD IMPACT, DAMAGE, ETC. LUBRICATE MECHANICAL PARTS PERIODICALLY AND CHARGE BATTERY REGULARLY.

CHAPTER 6

NEED BASED CONCEPT IN PERIODIC USFD TESTING OF RAILS AND WELDS

6.1 Introduction:

Safety against failures of rails in track depends upon the inspection frequency and the permissible defect size, other factors like rail metallurgy and loading conditions remaining same. To extract maximum service life out of the rails while ensuring safety, the inspection frequency has to be increased so that the rails are allowed to remain in track for longest possible period. At the same time, frequent watch over increasing incidence of defects is necessary. However, very high frequency of inspection as a general measure is not always practicable as cost of inspection becomes prohibitive.

The optimum cost of maintaining rails in track can, therefore be achieved if the inspection frequency is made dependent on the incidence of the defects. In such a concept of need based inspection, on sections where the number of defects detected is low, the inspection frequency is also kept low whereas on sections where the number of detected defects is high the inspection frequency also gets increased. The advantages of such a concept are obvious because the inspection resources are not unnecessarily frittered away on sections where the condition of rail is sound and its performance in track does not warrant frequent inspection.

Introduction of Need Based Concept of USFD has necessitated changes in the areas of classification of defects, frequency of inspection, detection equipment, organization, etc. In the following paragraphs these aspects are discussed.

6.2 Basis of change in criteria for defect classification:

The inspection frequency and condemning defect sizes are related parameters. If the inspection frequency is high, the condemning defect size can be suitably increased. Increase in condemning defect size also enhances the reliability of inspection, as chances of non-detection for smaller size defects are high. In the existing criteria which was evolved more than 25 years back, the condemning defects size, especially for OBS defects was kept very small. Now with 25 years of experience behind us in the area of USFD testing of rails and also the findings of studies in crack propagation mechanism conducted at RDSO, a more rational condemning defects size has now been specified. As a result, in the revised criteria to be used for need based USFD inspection, only IMR and OBS categories exist. The effect of this revision is to rationalise and suitably raise the condemning defect size in view of the higher frequency specified for inspection.

6.3 Classification of rail defects:

Defects detected during through USFD testing of rail shall be classified as per **Annexure-II A.** However visible defects on rails/ welds shall not be clarified by USFD personal and the same shall be recorded & brought to notice of sectional PWI for further remedial action.

6.3.1 Defect at any location which is detected by two or more probes and are considered to be classified as OBS/OBSW based on peak pattern of individual probe, should be classified as IMR/IMRW and action shall be taken accordingly as per Para 6.4.

6.3.2 In case two or more OBS/OBSW defects are located within a distance of 4.0 metre from each other, such OBS/OBSW defects shall be classified as IMR/IMRW and action shall be taken accordingly as per Para 6.4.

6.4 Action to be taken after Detection of defects: Following action shall be taken in respect of defective rails & welds:

S. No.	Classifi-cation	Painting on both faces of web	Action to be taken	Interim action
1.	IMR IMRW	Three cross with red paint	The flawed portion should be replaced by a sound tested rail piece of not less than 5.5 m length (in case of fish plated track) & 4 m (in case of welded track) within 3 days of detection.	SE/JE (P.Way)/USFD shall impose speed restriction of 30 Kmph or stricter immediately and to be continued till flawed rail/weld is replaced. He should communicate to sectional SE/JE (P.Way) about the flaw location who shall ensure that clamped joggled fish plate is provided within 24 hrs.
2.	OBS OBSW	One cross with red paint	Rail/weld to be provided with clamped joggled fish plate within 3 days. SE/JE (P.Way)/USFD to specifically record the observations of the location in his register in subsequent rounds of testing.	SE/JE (P.Way)/USFD to advise sectional SE/JE (P.Way) within 24 hrs about the flaw location. Keyman to watch during daily patrolling till it is joggled fish plated.

6.5 AT/FB/GP weld defect classification

6.5.1 Defects detected by 0^0/ 4 MHz double crystal probe & 70^0/ 2 MHz single crystal probe during through rail testing for defects detected in **AT/FB/GP** welds shall be classified as per **Annexure-II B.**

6.6 Frequency of testing of rails and welds: In view of the revised criteria of defect mentioned in Para 6.2, the testing frequency of 8 GMT has been prescribed. Based on the same, testing schedule of rails/welds as laid down in Para 6.6.1.1 shall be followed.

6.6.1 After the initial USFD testing of rails in rail manufacturing plant, the subsequent USFD testing needs to be carried out at reduced frequency until the rails have undergone 15% of the service life in GMT as given below (**Para 702 (1) (d)** of IRPWM):

For rails rolled in April 1999 and later, the reduced frequency testing period shall be 25% instead of 15%.

Gauge	Rail Section	Assessed GMT service life for T-12 72 UTS rails	Assessed GMT service life for T-12 90 UTS rails
B.G.	60Kg*	550	800 (1000 for routes covered by rail grinding)
	52Kg	350	525
	90 R	250	375
M.G.	75 R	150	-
	60 R	125	-

*For reduced frequency testing period, 800 GMT service life shall be considered for 60 kg (90 UTS) and 60 kg (R260) grade rails.

Rail testing during reduced frequency testing period is to be done using all probes (as given in Para 4.1) as is being done during normal testing frequency period on passage of every 40 GMT traffic or Eight (08) years, whichever is earlier.

Whenever, rails are not tested in rail manufacturing plant, the reduced frequency testing period shall not be applicable and the rail testing shall be done immediately after its laying in field and thereafter at the periodicity given in table under Para 6.6.1.1 .

6.6.1.1 Frequency of testing for all Main line BG (rail head center and gauge face /non-gauge face corner) and Main Line MG routes is given as under: For other sections Principal Chief Engineer of the Railway may adopt a frequency at his discretion.

Route	**Routes having GMT**	**Testing frequencyOnce in**
All MG routes	< 2.5	5 years
	2.5 – 5.0	3 years
	> 5	2 years
All BG routes (rail head center and gauge face corner / non-gauge face corner testing)	≤ 5	2 years
	> 5 ≤ 8	12 months
	> 8 ≤ 12	9 months
	> 12 ≤ 16	6 months
	> 16 ≤ 24	4 months
	> 24 ≤ 40	3 months
	> 40 ≤ 60	2 months
	>60≤ 80	1½ months
	>80	1 month

Digital double Rail Tester is to be used for testing of 'D' marked rails at reduced interval to be decided by Chief Track Engineer of Zonal Railway.

Note: USFD testing of rails and welds by B-Scan (SRT/DRT) having 7 probe/channel each rail, shall be decided by Principal Chief Engineer of the Zonal Railway depending on availability of B-Scan (SRT/DRT) having 9 probe/channel each rail.

6.6.1.2 Frequency of USFD testing for all Main line BG on CC+8+2t routes (rail head center and gauge face /non-gauge face corner) falling in temperature Zone IV and Zone III on track structure with 52 kg (90 UTS) rail at higher frequency corresponding to 6 GMT of traffic is given as under:

Route	**Routes having GMT**	**Testing frequency Once in**
All Main line BG on CC+8+2t routes (rail head center and gauge face /non-gauge face corner) falling in temperature Zone IV and Zone III on track structure with 52 kg (90 UTS) rail	≤ 5	18 months
	$> 5 \leq 8$	9 months
	$> 8 \leq 12$	6½ months
	$> 12 \leq 16$	4½ months
	$> 16 \leq 24$	3 months
	$> 24 \leq 40$	2½ months
	$> 40 \leq 60$	1½ months
	$>60 \leq 80$	1 month
	>80	20 days

6.7 Equipment:

RDSO approved rail testing equipment shall be employed for conducting ultrasonic examination. Both single as well as double rail testing equipments are suitable for this purpose.

6.8 Check list of Ultrasonic Testing of Rail/Welds:

A check list for the officials inspecting the quality of work being done by the Inspectors carrying out Ultrasonic Testing of Rails/Welds is placed at **Annexure – V.**

CHAPTER 7

LIMITATIONS OF ULTRASONIC FLAW DETECTION OF RAILS

7.0 Every scientific method/technique/equipment functions on certain principles and its applicability depends upon fulfillment of preconditions necessary to be satisfied. It accordingly implies that USFD examination is based on certain guiding principles and its flaw detection success depends upon thorough understanding of the governing factors.

Thus, the limitations being mentioned are not per-se the deficiency of the USFD technique rather in the existing arrangement under field conditions the equipment utilised incorporates facility only for specified defects. This aspect may be kept in view and the technique is to be pursued accordingly.

Limitations in respect of rail examination considering the various arrangements presently available have been elaborated below. It may also be mentioned here that limitations with regard to AT welding i.e. defects in web foot junction half moon cracks, vertical defects in web portion etc. are no longer limitations of the USFD equipments since in the newly developed equipment special probes have been provided for detection of these defects.

7.1

(i) To detect the defect efficiently, ultrasonic beam is to be directed towards the flaw perpendicularly, otherwise, the reflected beam may not be received by the receiver crystal, resulting in absence/reduction in amplitude of flaw signal in the CRT. Cracks normally have facets and hence even under misorientation provide reflecting surfaces leading to flaw indication.

(ii) For detection of defects in rails, probes having incidence angle 0^0, 70^0 (F), 70^0 (B), 37^0 (F), and 37^0 (B) have been provided in the USFD trolley. The angles have been chosen in a manner so as to detect defects which are generally observed during service and have been the cause of rail fractures.
The section of rail which is scanned by each type of probe has been indicated in **Fig. 2A, 2B, 2D and 2E**.
For detection of defects originating from Gauge Face and Non-gauge Face Corner, a dedicated test set-up has been developed. This set-up includes three 70^0 probes covering approx. the full width of the rail head and a set of two 45^0 probes. The area scanned by this arrangement is shown in **Fig.2D**. A defect located at 5mm from the corner is detectable using this equipment.
All commonly observed defects in rails are detectable by the above arrangement. In the event of gross mis-orientation of defect at times it may not be amenable for detection, however such situations are rare.

(iii) Severe pipe in the rail may give indication of flaw echo by 0° probe, But in case of hairline or fine central shrinkage (pipe), negligible drop occurring in bottom signal may remain unnoticed by the USFD operator**. (Ref Fig. 8 & 11)**

(iv) For detection of bolt hole cracks, 37^0 probes have been provided. This is because the cracks emanating from bolt holes are generally oblique and propagate in the zig-zag manner. However, cracks are also detectable by using 0^0 probe since they obstruct the path of sound waves and lead to drop/loss of back wall echo.

37^0 probes have been provided both in forward and backward direction. At fish plated joint, as shown in **Fig 2H,** if the cracks are not favourably oriented detection may not be possible. Similarly, if the cracks are propagating vertically downwards or upwards, detection is not possible.

If the cracks are so located that they are unable to be scanned by 0^0 probes due to smaller size or orientation, such cracks may not be detected in initial stages of their development.

(v) If sensitivity of the machine is poor or battery gets discharged the operator may miss the flaw signal. Hence, it is essential to ensure full charging of the battery.

(vi) The ultrasonic probes used in the rail testers have a frequency of 4 MHz (longitudinal wave) and 2 MHz (transverse waves). Therefore, cracks lesser than 0.8mm size cannot be detected by the present arrangement.

The sizes and frequency of the probes employed in the single rail tester/double rail tester are as under.

S.No.	Probe type	Size of Crystal	Shape of crystal	Frequency
1	0^0 (Double crystal)	18 mm or 18 mm x 18 mm	Circular Square	4 MHz
2	70^0 (Single crystal)	20 mm or 20 mm x 20 mm	Circular Square	2 MHz
3	37^0 (Single Crystal)	20 mm or 20 mm x 20 mm	Circular Square	2 MHz

(vii) Rails having rust, pitting, hogging, battering of rail end, misalignment of joints, scabs, wheel burns and other surface imperfections restrict proper acoustic coupling between probe and rail table and may not permit detection of flaws.

Whenever such defects are encountered, loss of back wall echo or an alarm signal is obtained. This indicates that defects if any below these patches may remain undetected. Under such circumstances hand probing may be done.

7.2 Testing of SEJs, points and crossings

Due to specific shape on some portion of these components, it is difficult to achieve proper space for acoustic coupling for testing. Therefore testing of these components is to be undertaken as per procedure laid down in chapter **10** & **11**.

7.3 Testing on sharp curves, gradients, slack gauge etc.

The USFD trolley has been designed to operate under normal conditions of gauge. In the event of dimensional variations in the gauge and also at sharp curves it is possible that the probes are not properly contacting the rail surface. This is indicated by loss of backwall echo or also by alarm provided in DRTs for backwall drop. Wherever it is not possible to ensure proper acoustic coupling due to these reasons, testing by hand probing or by single rail tester may be resorted to. Acoustic coupling needs to be ensured under all circumstances to detect the flaws**.**

7.4 Testing with test rig comprising of 45^0 probes is effective when the sides of rail head are nearly vertical. In case of badly worn faces of rail head the quality of result may not be appropriate.

CHAPTER 8

PROCEDURE FOR ULTRASONIC TESTING OF ALUMINO-THERMIC WELDED RAIL JOINTS

8.1 Scope:

Following types of testing for Alumino Thermic (AT) welds have been prescribed. These are:

a. Testing of weld head/web, which gets covered during through periodic rail testing by SRT/DRT as per **Para 6.6**. The frequency of testing in this case is as per **Para 6.6.1.1**. As per this testing defects detected in weld heads are classified as 'IMRW' and 'OBSW' vide **Annexure II B.** The action to be taken for such defective welds is as per **Para 6.4**.

b. Periodic testing of complete weld by hand probing of weld head/web and bottom flange, using 0^0 2MHz, 70^0 2 MHz, 45° 2 MHz probe (AT weld foot scanning for half-moon shaped defect) and 70^0 2 MHz SL probes. The frequency of testing in this case is as per **Para 8.15.2**. As per this testing defects detected in welds are classified as '**DFWO/DFWR'**. The action to be taken for such defective welds is as per **Para 8.14**.

c. Besides this, welds are also tested after their execution using 0^0 2MHz, 70^0 2MHz, 45° 2 MHz probe (AT weld foot scanning for clustered defect/ micro porosities in web foot region) and 45° 2 MHz (Tandem probe scanning for lack of fusion). This test is termed as Initial Acceptance Test. As per this testing, defects detected in welds are classified as '**DFWN'**. The action to be taken for such defective welds is as per **Para 8.10.1**

This Chapter covers the requirement of complete ultrasonic testing of Alumino-thermic welded rail joints by hand probing immediately after execution of the weld described at (c) above and for periodic examination of complete weld described at (b) above only.

8.2 Apparatus required:

8.2.1 Equipment:

Any RDSO approved model of ultrasonic equipment for Alumino-thermic welded rail joints as per RDSO specification No. M&C/NDT/129/2005 or its latest version along with rig for tandem testing.

8.2.2 Probes: The following probes having Lead zincronate- titanate crystal shall be used for Ultrasonic testing of Alumino-thermic joints.

a) Normal (0°) 2 MHz, 18 mm. ϕ Double crystal.
b) 45°/ 2 MHz, 20mm.dia. or 20mm.x20 mm.(square) crystal size, Single crystal –2 no.
c) 70°/2 MHz, 20mm.dia. or 20mm.x20 mm. (square) crystal size, Single crystal - 1 no.

d) A pair of two 70°/2 MHz probes inclined at 20° side looking with respect to usual beam path. Side looking angle of both probes shall be in opposite direction to each other.

8.2.3 Cables:

Co-axial cable for each probe shall be used. The length shall not be more than 2.0 metre.

8.2.4 Couplant:

Soft grease/oil shall be used as couplant as per specification given in para **4.1**.

8.3 General Condition:

After execution of AT weld, welded zone shall be dressed properly to facilitate placement of probes and to avoid incidence of spurious signal on the screen. The top of rail head surface shall be dressed to obtain reasonably flat and smooth surface. The flange of the weld up to a distance of 200 mm on either side of the weld collar shall be thoroughly cleaned with a wire brush to ensure freedom from dust, dirt, surface unevenness etc.

8.3.1 Visual Examination:

All the welded joints shall be cleaned and examined carefully to detect any visible defects like cracks, blow holes. Any joint which shows any visible defect shall be declared defective.

8.4 Sensitivity setting procedure:

8.4.1 Standard test rail:

The sensitivity of the ultrasonic equipment shall be set with the help of a standard AT welded rail piece of 600 mm (300 mm rail each side of joint) length having a simulated flaw at standard locations as shown in **Fig.20 (a).** The standared AT welded rail piece shall be preferably of same AT welding technique & welding agency which are to be tested in field to avoid confusion of signals from weld profile.

8.5 0°/2 MHz, Double crystal Normal Probe:

This scanning is used to detect Porosity, Blow hole, Slag inclusion in head and up-to mid web of the AT welded joint.

8.5.1 Calibration:

Following procedure shall be adopted for calibration of 0^0 2 MHz double crystal probe.

i. Select range 300 mm with range control key.
ii. Select Mode T-R i.e. Double Crystal mode.
iii. Set Delay 0.
iv. Set Probe Zero 0.
v. Feed longitudinal wave velocity (5920 m/s) / Press measure 0 key.
vi. Feed angle 0^0.
vii. Connect 0˚ Double Crystal probe and put it on IIW (V1) Block after applying couplant at 100 mm width side.
viii. Set first reflected peak at 3.3 div. using probe zero. Place Gate over it and read the beam path, depth shall be 100 mm.

ix. Second reflected peak will appear at 6.7 & third peak at 10.0.
x. If last peak is not at 10.0, velocity may be adjusted to set the last peak at 10.0 (if velocity control available).
xi. The equipment is calibrated for 300 /200 mm Longitudinal wave for 0˚ Double Crystal probe.
xii. To verify the calibration, put probe on top of rail head, the back peak position will be at 5.2 for 52 Kg rail & at 5.7 for 60 Kg. rail.

8.5.2 Sensitivity setting:

Place 0°normal probe on test rail. The reflection from 3 mm.dia. hole in head of standard AT welded rail test piece shall be set to 60% of full screen height by suitable manipulation of gain control.

8.5.3 Test Procedure: The probe shall be placed on the head of the AT welded joint ensuring proper acoustic coupling. The probe shall be moved on the weld centre to scan the weld area.

8.5.4 Defect classification:

I. Initial testing:
   a) Flaw signal of height 30% and above obtained by normal probe from the head region, to be declared as **DFWN**.
   b) Flaw signal of height more than 20% obtained by normal probe from web or foot location, to be declared as **DFWN.**

II. Periodic testing:
   a) For any flaw signal obtained by normal probe from the head region
      i. Flaw signal 40% and above and up to 60% to be declared as **DFWO.**
      ii. Flaw signal above 60% to be classified as **DFWR**.
   b) For any flaw signal obtained by normal probe from web or foot location
      i. Flaw signal of height more than 20% from the web or foot and up to 40% to be classified as **DFWO**.
      ii. Flaw signal of height more than 40% from the web or foot or more to be classified as DFWR.

8.6 70°/ 2 MHz (Head scanning):

This scanning is used to detect lack of fusion, porosity, blow hole, slag inclusion, cracks in head of AT welded joint.

8.6.1 Calibration:

Following procedure shall be adopted for calibration of 70^0 2 MHz single crystal probe:

i. Select range 165 mm with range control key.
ii. Select Mode T+R i.e. Single Crystal mode.
iii. Set Delay 0.
iv. Set Probe Zero 0.
v. Feed Shear wave velocity (3230 m/s) / Press measure 70 key.
vi. Feed angle 70^0.
vii. Connect 70˚/2MHz Single Crystal probe and put it on IIW (V1) Block after applying couplant and direct the beam towards 100 mm curvature.
viii. Move the probe slightly to and fro to get maximize signal.

ix. Using probe zero set this peak at 6.0 or by using gate read beam path 100 mm.
x. To verify the calibration, Direct the probe towards 25 mm curvature and maximize the peak.
xi. Put the gate on this peak, the beam path shall be 25 mm.
xii. The equipment is calibrated for 165 mm shear wave.

8.6.2 Sensitivity setting:

Connect the 70°/ 2 MHz by means of co-axial cables and select (T+R) mode. Place the probe on the railhead directing the beam towards 3-mm dia.-drilled hole in the head of the standard AT welded test piece. Move the probe in longitudinal direction on the rail so that reflection from the hole is obtained. Now set the height of the reflected signal to 60% of full screen height by suitable manipulation of the gain control. This gain shall be used for testing.

8.6.3 Test procedure:

Place the probe on the rail head on one side of the AT welded reinforcement and move toward the weld in zig-zag manner. This exercise shall be repeated 2-3 times. The same shall be carried out from both sides of the weld.

8.6.4 Defect classification:

I. Initial testing :
   i. A welded joint showing moving signal of 30% or more of FSH shall be classified as **DFWN.**
   ii. A bunch of moving signals more than 10% of FSH shall also be considered as defective weld & to be declared as **DFWN.**

II. Periodic testing :
   i. A welded joint showing moving signal of 40% or more and up to 60% of FSH shall be classified as **DFWO.**
   ii. A welded joint showing moving signal of more than 60% of full screen height to be classified as **DFWR.**
   iii. A bunch of moving signals more than 10% of FSH shall also be considered as defective weld & to be declared as **DFWR** (Fig. 30).

8.7 45^0 / 2MHz probe:

8.7.1 45^0 / 2MHz probe (AT weld foot scanning):

This scan is used to inspect the clustered defects/ micro porosities and half moon shaped defect at the bottom of weld foot**. (Fig. 22 (a))**

8.7.1.1 Range calibration:

Following procedure shall be adopted for calibration of 45^0 2 MHz single crystal probe

i. Feed range 275 mm with range control key.
ii. Select Mode T+R i.e. Single Crystal mode.
iii. Set Delay 0.
iv. Set Probe Zero 0.

v. Feed Shear wave velocity (3230 m/s).
vi. Feed angle 45˚.
vii. Connect 45˚/2 MHz Single Crystal probe and put it on IIW (V1) Block after applying couplant and direct the beam towards 100 mm curvature.
viii. Move the probe slightly to and fro to get maximize signal.
ix. Using probe zero set this peak at 3.6 or by using gate read beam path 100mm.
x. To verify the calibration, Direct the probe towards 25 mm curvature and maximize the peak.
xi. Put the gate on this peak, the beam path shall be 25 mm.
xii. The equipment is calibrated for 275 mm shear wave.

8.7.1.2 Sensitivity setting:

Place 45^0 /2MHz probe on the rail head surface at a distance equal to height of rail from the centre of the AT weld**.{Fig. 22 (a)}.** Select T+R single crystal mode. Move the probe 20mm either side of this position (probe index marking) to pick up half-moon crack in the central region of weld reinforcement as shown in **Fig 23**. This exercise shall be carried out two-three times from each side of the weld and signal from simulated flaw should appear at a distance of approximately 400mm for 52 kg rail. This distance will vary with respect to rail section height. The signal so obtained shall be adjusted to 60% of full screen height by manipulating the gain control.

8.7.1.3 Test Procedure:

The probe (45^0/2MHz probe /single crystal) shall be placed on the rail head at a distance equal to height of the rail from the centre of AT weld (Probe index marking) under test with same sensitivity as per **para 8.7.1.2**. This testing technique will scan the bottom of the weld in the central zone. The probe shall be moved 20 mm on either side of the probe index marking. The scanning shall also be repeated from other side of weld with beam directing towards the foot region of the weld.

8.7.1.4 Defect classification:

I. Initial testing:

Any flaw signal obtained by this probe of 20% height or more shall be classified as defective AT welded joint (DFWN).

II. Periodic testing:

Any flaw signal obtained by this probe of 20% height or more shall be classified as defective AT welded joint (DFWR).

8.7.2 45^0/ 2MHz single crystal probe (Tandem probe scanning):

The tandem probe rig scan on the rail table by 45^0 probe is used to detect any vertically oriented defect such as lack of fusion located at head–web junction, complete web & up to web-foot junction area.

8.7.2.1 Range calibration: The equipment shall be set for a depth range of 275 mm as per **Para 8.7.1.1.** The equipment shall be set in T/R (Double Crystal mode) by selector switch.

8.7.2.2 Sensitivity setting:

Place the tandem rig on the railhead and attach 45^0 probes such that the beam direction is as shown in **Fig. 22 (b).** Adjust the height of reflected beam received by receiver probe (Rx) to 100% of full screen height. Increase the gain further by 10 dB. This gain shall be used for normal testing of AT weld by this set up.

8.7.2.3 Test procedure: Place the tandem rig on the rail head under test as shown in **Fig. 22 (c)**. The datum line of the rig shall be in line with centre line of weld. Test the weld with sensitivity setting as mentioned in **para 8.7.2.2**. This exercise shall also be repeated from other side of the weld.

8.7.2.4 Defect classification:

I. Initial testing:

Any flaw signal of 30% of full screen height or more shall be classified as **DFWN.**

II. Periodic testing:

Any flaw signal of 40% of full screen height or more shall be classified as **DFWR**.

8.8 70°/2MHz Side Looking (SL) probe:

This procedure shall be used for the detection of half moon shaped transverse defect with a pair of 70^0 side looking probes using transmitter-receiver method.

8.8.1 Range calibration:

The equipment shall be set for a depth range of 165 mm shear wave.

8.8.2 Sensitivity setting: Set Range - 165 mm, Velocity- 3230 m/sec, Mode- Double crystal and Angle - 70°. Connect cables of side looking probes to transmitter & receiver socket in such a way that direction of side looking crystal face is inward i.e. towards simulated half moon shaped defect. Place the 70^0 side looking (Tx and Rx) probes on the upper zone of the flange at a distance of 85 mm on either side of flange {**Fig. 22 (a)**}. Move the probes slowly in slight zigzag manner towards the weld upto a distance of 20 mm from weld collar. Set the signal obtained from simulated half moon defect to 60% of full screen height with the help of gain control switch. This gain setting will be utilized during testing of the weld.

8.8.3 Test procedure:

Place the transmitter and receiver 70° side looking probes at positions as mentioned in **Para 8.8.2.** Move the probes slowly in zigzag manner towards the weld. The position of transmitter and reciever probes from a defect signal may vary depending upon the location of half moon defect. This exercise shall also be done from other side of the weld.

8.8.4 Defect Classification:

Periodic testing:

The defect signal of 20% of full screen height or more is to be classified as **DFWR.**

8.9 Flange testing by 70°/2 MHz, 20 mm x 20 mm single crystal probe:

This scanning is done for detecting lack of fusion, porosity, blow hole, slag inclusion in flange of AT weld.

8.9.1 Range calibration: The equipment shall be set for a depth range of 165 mm shear wave.

8.9.2 Sensitivity setting:

70°/2MHz, single crystal probe shall be connected to the socket available in the ultrasonic equipment. The selector switch shall be set to single crystal mode. Move the probe towards the 3 mm dia hole drilled in the middle of flange of the AT weld **Fig. 20(a)** and manipulate gain control to obtain a maximum signal height 60% full screen height on the screen.

8.9.3 Test Procedure:

70° probe shall be placed on the flange at a suitable distance (180 mm) corresponding to position 'L'in **Fig. 21(a)** such that ultrasonic waves are directed towards the weld. The probe shall thereafter be moved slowly in a zig-zag manner towards the weld. Similar testing shall be carried out from 'C' and 'U' region as shown in **Fig. 21(a).**

8.9.4 Defect classification:

I. Initial testing:

A welded joint showing flaw echo of 30% vertical height or more is to be declared as DFWN.

II. Periodic testing:

i. A welded joint showing flaw echo of 40% vertical height or more and upto 60% is to be declared as **DFWO.**

ii. A welded joint showing flaw echo of more than 60% vertical height is to be declared as **DFWR.**

8.10 Initial USFD testing of AT welds and subsequent testing within the guarantee period of contract

A thermit welding done in-situ shall be joggled fish-plated with two clamps and supported on wooden blocks of 300-450 mm length untill tested as good by USFD.

8.10.1 The defective joints (DFWN) based on the criteria mentioned in preceding paras and para 8.12.3 shall not be allowed to remain in service for initial USFD testing of AT welds. During Subsequent testing within the guarantee period of contract defective joints (DFWO or DFWR) shall be cropped, re-welded and tested again. The re-welded joints shall be scanned ultrasonically again with the same set of acceptance criteria to ensure freedom from any harmful defects.

8.11 Periodic testing of welds in service

8.11.1 The periodic testing of welds using 0^0 2MHz, 70^0 2MHz, 45^0 2MHz and 70^0 2MHz SL probes shall be done as per **para 8.15.2.**

8.12 Procedure for initial and periodic Ultrasonic Examination of 75 mm gap AT welded Joints

8.12.1 Standard Test Sample:

The sensitivity of ultrasonic equipment shall be set with respect to AT weld standard test sample of 1.5 m length having a simulated flaw at standard location as shown at **Fig.20 (b).**

8.12.2 Sensitivity setting:

The signal from the simulated flaw of 3 mm dia. hole in the head shall be set to 60% of full screen height with 0^0, 2 MHz and 70^0, 2 MHz probes for detection of discontinuities in the rail head. For Flange testing a signal from a saw cut of 30 mm in the weld metal in the flange 15 mm away from the edge of the weld collar as per **Fig. 20(b**) shall be set to 60% of full screen height using 70^0 2 MHz probe.

8.12.3 Defect Classification:

I. Initial testing:
   a) Head - With 0^0 & 70^0 probes, rejection criteria will be same as for 25 mm gap AT weld joint. (**Para 8.5.4 (I) and Para 8.6.4 (I)**)
   b) Flange - With 70^0 2MHz/ probe, Any moving signal of height more than 20% of the full screen height shall be treated as defective weld (**DFWN**).

II. Periodic testing:
   a) Head - With 0^0 & 70^0 probes, rejection criteria will be same as for 25 mm gap AT weld joint. (**Para 8.5.4 (II) and Para 8.6.4 (II)**)
   b) Flange- With 70^0 2MHz/ probe, Any moving signal of height more than 20% of the full screen height shall be treated as defective weld (**DFWR**).

8.13 Defects detected by 0^0 2MHz , 70^0 2 MHz, 45^0 2 MHz and 70°/2MHz SL probes with RDSO approved customized AT weld tester/**existing machine** shall be classified in accordance with provisions contained in **Para 8.15.2.**

8.14 Action to be taken after detection of defects in AT welds: Action to be taken for defects in AT welds shall be same as at **para 6.4**. In addition, following shall also be applicable for welds classified as defective (DFWO/DFWR) in periodic testing of AT welds using hand probing:

Classification	Painting on both faces of weld (In Head)	Action to be taken
Defective weld **'DFWO/ DFWR'** with 0^0 / 2MHz, 70^0/ 2MHz, 45^0/ 2 MHz or 70^0 2MHz SL probe, 45^0/2 MHz Tandem Rig	In case of DFWO, one circle with red paint. In case of DFWR, two cross with red paint.	(i) In case of DFWO weld, following action will be taken: a) SSE/JE (P.Way)/USFD shall impose speed restriction of 30 kmph or stricter immediately and communicate to sectional SSE/JE about the flaw location, who shall ensure the following : b) Protection of defective weld by joggled fish plates using minimum two tight clamps immediately with a speed restriction of 30 kmph. Speed restriction can be relaxed to normal after protection of DFWO weld by joggled fish plates with 2 far end tight bolts (one on each side) with champhering of holes, within 3 days. The joint is to be kept under observation. (ii) In case of DFWR following action will be taken: a) SSE/JE (P.Way) USFD shall impose speed restriction of 30 kmph or stricter immediately and communicate to sectional SSE/JE about the flaw location who shall ensure the following: b) Protection of DFWR weld by joggled fish plates using minimum two tight clamps immediately. SR of 30 Kmph can be relaxed to normal after providing joggled fish plates with two far end tight bolts one on each side with champhering of holes. The DFWR weld shall be replaced within three months of detection. Adequate traffic block should be granted for removal of DFWR welds. In case of non removal within three months, a speed restriction of 75 kmph for loaded goods train and 100 kmph for passenger train should be imposed. (iii) In case of defective weld (DFWO/DFWR) on major bridges & bridge approaches (100 m either side) and in tunnels & on tunnel approaches (100 m either side), following action will be taken : a) SE/JE (P.Way)/USFD shall impose speed restriction of 30 Kmph or stricter immediately and to be continued till defective weld is replaced. He should communicate to sectional SE/JE (P.Way) about the flaw location who shall ensure the following : b) Protection of defective weld using clamped joggled fish plate within 24 hrs. c) The defective weld shall be replaced within 3 days of detection.

Note: DFWN found in "Initial Acceptance Test" shall be removed from track as per para 8.10.1.

8.15 Frequency of testing of welded joints

8.15.1 Frequency of testing of welded joints for through periodic rail testing by SRT/DRT using 0^0 & 70^0 probes shall be as per 6.6.1.1.

8.15.2 Testing of AT welded joints by hand probing shall comprise of testing by probes with sensitivity setting and calibration as per references indicated against them in the table below:

S.No	Probes	Calibration as per	Sensitivity Setting as per	Scanned area	Acceptance Criteria
1.	0^0 2 MHz	Para 8.5.1	Para 8.5.2, Fig 20(a)	Head, web	As per Para 8.5.4
2.	70^0 2 MHz	Para 8.6.1, 8.9.1	Para 8.6.2, 8.9.2, Fig 20(a)	Head, weld foot	As per Para 8.6.4 & 8.9.4
3.	70^0 2 MHz SL	Para 8.8.1	Para 8.8.2, Fig 22 (a)	Weld foot (Half Moon Defect)	As per Para 8.8.4
4.	45^0 2 MHz	Para 8.7.1.1	Para 8.7.1.2 , Fig 22 (a) & 23	Weld foot (Half Moon Defect/clustered defect & micro porosity)	As per Para 8.7.1.4
5.	45^0 2 MHz single crystal probe	As per Para 8.7.2.1	As per Para 8.7.2.2	Lack of fusion in the web and foot region below web	As per Para 8.7.2.4

The frequency of testing of AT welds with above listed probes by hand probing shall be as under:

S No	Type of Welds	Type of Testing	Testing Schedule	
1	**Conventional AT weld**	Periodic Tests	Every 40 GMT or 5 years whichever is earlier	
2	**SKV Weld**	Acceptance Test	Immediately after welding	
3		First Periodic Test	20 GMT or 1 year whichever is earlier	
		Further tests based on route GMT	**Routes having GMT**	**Frequency**
4			> 80	1 years
5			>60 ≤ 80	1½years
6			>45 ≤ 60	2 years
7			>30 ≤ 45	3 years
8			> 15 ≤30	4 years
9			0-15	5 years

In case of welds on major bridges & bridge approaches (100 m either side) and in tunnels & on tunnel approaches (100 m either side), the minimum frequency of testing shall be once in a year.

Due to unusually high weld failure or other abnormal development in some sections, Principal Chief Engineer may order testing of welds early, as per need.

The testing interval of USFD testing of defective AT welds should be reduced by 50% of normal testing interval of AT welds as provided in Para 8.15.2 to avoid fractures of defective welds.

The frequency of USFD testing of AT welds on loop lines shall be followed as under:

i) Acceptance test- immediately after welding.

ii) First periodic test - after one year.

iii) Further test - once in every five years for passenger running loops.

- Not to be carried out for non passenger running loops.

Due to unusually high weld failure or other abnormal development in some sections, Principal Chief Engineer may order testing of AT weld for loop lines early, as per need.

8.16 Through Weld Renewal should be planned after the welds have carried 50% of the stipulated GMT of rails. Among the various sections, due for Through Weld Renewal (TWR) as per this criteria, Chief Track Engineer will decide inter se priority based on incidences of defect detection and weld failures.

<u>Note :</u> Guidelines for the Operators:

a) The correctness of angles and index marking of the probe shall be ascertained before testing. Only probes meeting the specified values shall be used during testing.

b) Mere appearance of moving signal during flange testing of weld shall not be the criterion for rejection of a joint. These signals may come from the geometry of the flange weld reinforcement. Therefore, while declaring a joint defective in flange testing, operator shall ensure that signals are flaw signals and not the signals coming due to geometrical configuration of the weld. Following method shall be adopted for taking decision in this regard:

(i) Horizontal distance of flaw shown on screen of the equipment shall be observed.

(ii) Measure the actual distance from probe index to confirm if the flaw signal is coming from the weld collar/reinforcement or from the weldment.(**Fig.21b**)

(iii) The defect signal observed at the collar from one end of testing shall be confirmed from other end also. If defect is confirmed from both the ends the welds must be marked as defective.

c) Oil or grease shall be used for proper acoustic coupling instead of water for AT weld testing. Operator shall use the same couplant during testing and setting the sensitivity.

d) More than one DFWO defect in one weld shall be classified as DFWR.

CHAPTER 9

ULTRASONIC TESTING OF FLASH BUTT AND GAS PRESSURE WELDED JOINTS

9.1 Scope: This procedure covers the ultrasonic testing technique of flash butt and gas pressure welded rail joints by using pulse-echo, A-scan examination method of detecting weld discontinuities.

9.1.1 This practice utilises only shear wave probe having 45^0 & 70^0 refracted angle in steel, 45^0 probes to test head and 70^0 probe to test web and foot of the welded joints.

9.1.2 Significance:
It is essential that evaluation be performed properly by trained and qualified personnel.

9.2 Code of procedure

9.2.1 Equipment and accessories

(i) Any RDSO approved model of ultrasonic equipment for Alumino-thermic welded rail joints as per RDSO specification No. M&C/NDT/129/2005 or its latest version.

(ii) Two single crystal 45^0 2 MHz probes, one single crystal 70^0 2 MHz probe.

(iii) 0^0 4 MHz double crystal probe (0^0 2 MHz single crystal probes, shall be used to check equipment characteristics.)

(iv) Battery with specific voltage suitable for the USFD to be used.

(v) Battery charger

(vi) Voltmeter

(vii) Standard rail piece of 2.5 m length having standard simulated defects at standard locations **(Fig. 4).**

(viii) Calibration block 60 X 50 X 50 mm of steel grade 45C8 to IS: 1875 – 1992.

(ix) Steel measuring tape.

(x) IIW-VI or V2 block

9.3 Pre-requisite

(i) **Coupling condition/surface preparation:** The protruding upset metal around welded joint shall be removed by any suitable mechanical means in such a way that the remaining protruded metal does not produce sharp corner and the finished surface of the protruded metal if any left should merge smoothly into the surfaces of the adjacent base metal. The scanning surfaces must be free from weld spatter, scale, dirt, rust and extreme roughness on each side of the weld for a distance equal to 200 mm.

Couplant:
The couplant should wet the surfaces for the probes and the scanning surfaces and eliminate any air space between the two. Depending upon availability and feasibility of the testing, oil or grease can be used as couplant.

(ii) Calibrate the depth range of ultrasonic flaw detector with the help of 60 X 50 X 50 mm steel block of steel to grade 45C8 to IS : 1875 – 92 .

9.4 Calibration and sensitivity setting

(i) Calibrate the digital ultrasonic weld tester for 165 mm shear wave as per procedure given at para no. 8.6.1 and after calibration switch over to T/R double crystal mode.

(ii) Connect the 45° probes, one to transmitter connector and the other to receiver connector. Place the 45° probes on standard rail piece as shown in Fig. **24 (a).** Move the probes forward and backward alternately and set the gain to achieve 60% height of full screen from a 5 mm dia drill hole drilled in head.

(iii) Remove the 45° probes and connect 70° probe (Turn the probe selector T+R i.e. single crystal mode). Place the probe at approximately 100 mm from the 5 mm dia hole on the web as shown in **Fig. 24(b).** Move the probe to and fro from 5 mm dia hole and set the gain to achieve 60% height of full screen and this gain level shall be reference gain for testing of web and flange of the joints.

(iv) The equipment is now calibrated for depth range of 16.5 mm per main scale division (for machine having 10 main divisions on horizontal scale) to shear wave and gain of the UFD is set separately for conducting the test using 45° and 70° probes.

9.5 Examination of flash butt/gas pressure welded rail joints in depot (Initial testing):

Examination of flash butt welded joints is performed separately for the rail head, web and flange. In case of scanning of weld at rail head, two single crystal 45° angle probes of 2.0 MHz shall be used, one of which shall act as transmitter and the other as receiver. A 70° single crystal angle probe of 2 MHz frequency shall be employed for examining the welds at web and flange. All the above probes have index marks on their housing to denote the point at which the central beam emerges.

9.5.1 Testing of weld at rail head:

After calibration has been done, the two 45° angle probes shall be connected to the unit by means of two probes cables one acting as transmitter and other as receiver. The probe selector switch shall be operated in T/R mode in which one works as Transmitter and the other as receiver.

Oil or grease as per specification given at para no 4.1 shall be applied as couplant along the right and left hand side faces of the rail head, up to 100 mm from the joint on both sides of the weld.

9.5.1.1 Two 45° angle probes shall be placed and moved along the two side faces of the rail head in the longitudinal direction of the rail. Slight twisting movements, with the beam directed towards the weld, shall be imparted mutually to the probes as shown in the **Fig. 24 (a).** In order to examine the entire width of rail head as well as the height, maximum mutual displacement at start shall be equal to width of top of rail head. If, for example, the left hand probe is at maximum width displacement away from the weld the right hand probe shall be directly over the weld and vice-versa. The probe shall then be advanced from the weld as shown in the **Fig. 24 (a).** The movement shall be continued until the probes are in reversed positions with respect to the beginning of the test. This operation shall be repeated 3-4 times and at the end of each traverse slight horizontal twisting movements shall be given to the

probes. Probing may be continued from the other side of the joint also to take care of defects unfavorably oriented to the search beam applied from the other side.

9.5.1.2 Detection of defects: The common flash butt welding defects are lack of fusion and oxide inclusions. They are generally transversally oriented. If the rail head is free from defects, no flaw signal will appear on the screen. If there are flaws, the beam will be reflected at the discontinuities and picked up by the receiver probe. For a particular rail section, the flaw signal shall always appear at a fixed graduation on the horizontal scale. The location of the flaw can be determined by the position of the probes. Invariably the flaw will be on that side of the rail head, which is nearer to the weld. If both the probes are at equal distance from the weld, the flaw will be in the center of the rail head as shown in **Fig. 24 (a).** An indication of the flaw size can be made from the amplitude of the flaw signal and the extent of the transverse of the probes.

Any welded joint when tested with gain setting specified showing flaw signal shall be considered defective.

9.6 Testing of weld at rail web and flange

9.6.1 Setting of sensitivity:

To examine the web and flange locations of flash butt welded rail joints the gain level of flaw detector's setting shall be changed and set as per **para 9.4(iii)** and probe selector switch shall be turned to single crystal operation i.e. in T + R mode.

9.6.2 Couplant:

Oil or grease as per specification given at para no 4.1 shall be applied as couplant along the right and left hand side surfaces of the rail web and foot up to 100 mm and 180mm respectively away from the joint on both sides of the weld.

9.6.3 Testing procedure:

The probe shall be positioned 100 mm away from the weld in web region and transversed in a zigzag manner towards the weld. The probing should be done on the web so as to cover the entire width as shown in **Fig 24 (b).** Testing of the flange should be done as per the procedure described in **Para 8.9.3 (Fig. 21 (a)).**

9.6.4 Detection of defects:

To detect flaws in the web, the probe must be twisted slightly in the direction of the web. No flaw signal will appear on the screen if the rail flange and web are sound. If there are discontinuities in the weld, moving flaw signals will appear on the screen. When the flaw signal is at its maximum height, the distance of the probe from the weld joint shall be measured, to determine the location of the flaw.

Any welded joint when tested with normal gain setting showing any moving signal shall be considered as defective.

9.7 Periodic Testing

9.7.1 Frequency of testing with 0^0 & 70^0 probe: Same as for rails and shall be carried out along with rail testing.

9.7.2 Frequency of testing with 70^0 hand probing for web and flange:

Normally there is no need for hand testing after first testing of welds. Additional hand probing be carried out as per **para 9.8**.

9.8 For Flash Butt Welds: 45^0 and 70^0, 2 MHz hand probing for web and flange:

In case of flash butt welds normally there is no need for hand testing (with 45^0 and 70^0 probes), however, Chief Engineer may order hand probing with these probes in case failure rates are high in his opinion.

CHAPTER 10

ULTRASONIC TESTING OF RAILS REQUIRED FOR FABRICATION OF POINTS AND CROSSINGS

10.1 New rails without bolt holes and suitable for laying in track are used for the fabrication of points and crossings. These rails, therefore, do not have any chance of fish bolt hole cracking or any progressive type of defects. The defects like pipe, seam, lap, inclusions, segregation can only be expected in these rails. Therefore, in the procedure for ultrasonic testing of these rails only normal probe (0°) is required. Probing shall be carried out from top of the rail head, side of the rail head and side of the web. The use of angle probe has not been included as transverse progressive crack of fish bolt hole cracks are not expected. This testing will be undertaken besides visual examination of rails for freedom from any surface defects.

10.2 Scope:

This chapter stipulates the ultrasonic testing technique of new rails required for fabrication of points and crossings by hand probing using ultrasonic flaw defector and lays down the acceptance standard.

10.3 Accessories

10.3.1 Probes:

One single crystal normal probe 20/25 mm dia, 2/2.5 MHz frequency for checking the efficiency of the ultrasonic flaw detector. One double crystal normal probe of 4 MHz frequency, 18mm dia (overall), stainless steel casing and with perspex insert having a path length equal to 50 mm of steel required for testing of rails.

Both the probes shall meet the requirement of the tests stipulated in equipment specification.

10.3.2 Battery:

The battery shall be a rechargeable, plug-in type (preferably Ni-Cd type) 6V/12V suitable for working about eight hours continuous operation per charge.

10.3.3 Battery charger:

The battery charger shall be suitable for charging the battery provided with the flaw detector.

10.3.4 Co-axial cable:

Two meter co-axial cable fitted with BNC connector for connection with single crystal probe.

10.3.5 Calibration block:

60x50x50mm block of steel to grade 45C8 of IS:1875 – 1992.

10.3.6 Standard test rail:

The rail piece shall be 250/300 mm in length preferably of the same section used for the manufacture of crossings, having 1.5 mm dia and 2.0 mm dia flat bottom holes drilled along the central axis of the head, web and foot locations as indicated in **Fig. 25.**

10.3.7 Checking the sensitivity of the probe:

The double crystal normal probe shall be able to detect 1.5 mm, 2.0 mm and 2.0 mm dia flat bottom holes in the rail head, web and foot respectively of the standard test rail. The amplitude of the peaks shall be set at 60% height.

10.4 Testing procedure

10.4.1 Surface preparation:

The probing faces of the rail shall be cleaned with hard wire brush to make it free from dirt, etc. for achieving acoustic coupling.

10.4.2 Checking the equipment: Check the correct functioning of the flaw detector or probe and adjust the sensitivity of the unit with standard test rail as in **para 10.3.7**

10.4.3 Calibration: Calibrate the unit for 300mm range for testing the rail while probing from top of the rail and for 100mm range while testing from the side head and web.

10.4.4 Testing: After calibration of the unit the rails shall be tested manually using double crystal normal probe 4.0 MHz frequency with water/oil as couplant. The rails shall be tested by probing from the rail head top, rail head side and web. Typical oscillogram pattern for various probe positions are given for guidance as indicated below:

(i) **Probing from the rail table**:

Oscillogram pattern for sound rail will be as given at **Fig.5.**

The pattern obtained on the defective rails will be as in **Fig.14** for segregation, **Fig.11** for vertical longitudinal split in web.

(ii) **Side probing from rail head**: Oscillogram pattern for sound rail shall be as given at **Fig.9**.

The pattern obtained on defective rails will be as given in **Fig.10** for vertical split in head.

(iii) **Side probing from web**:

Oscillogram pattern for sound rail shall be as given in **Fig.12**.

The pattern obtained on defective rails will be as given in **Fig.13** for vertical split in web.

10.5 Acceptance standards:

Any flaw peak appearing on the cathode ray tube of amplitude higher than 60% of the full screen height shall indicate a defective rail and such rails shall not be used for fabrication of points and crossings.

10.6 Guidelines for USFD testing of tongue rail of point & crossing in service.

10.6.1 For purpose of USFD testing of tongue rails of points and crossings, the tongue rail can be demarcated in three zones as under:

a. Zone-1: Where full width of Rail head is available.

b. Zone-2: Region where scanning by 70^0 probe is easily feasible i.e. up to width of rail head of points and crossings, where 70^0 probe of 20 mm crystal size can be suitably placed over it.
c. Zone-3: Rest portion of tongue rail of points and crossing.

10.6.2 The USFD testing of tongue rails of points and crossings, shall be done as given below. The sensitivity setting for the probes shall remain same as used for through periodic rail testing. The frequency of USFD testing in Zone-1 and Zone-2 of tongue rails of points and crossings shall be same as that of periodic rail testing as specified in Para 6.6 of this manual.

a. Zone-1: This part of tongue rail of point & crossings where full width of rail head is available, shall be covered in normal rail testing using double rail tester or single rail tester. In some of the switches in which guide roller of double rail tester hinder the movement of trolley up to full width of rail head part, lower dia of guide roller shall be used.
b. Zone-2: This part of tongue rail shall be tested manually using 70˚/2 MHz, Single crystal probe having crystal size 20 dia. or 20x20 mm square crystal.
c. Zone-3: This part of the tongue rail shall be examined visually by P. Way officials during their scheduled inspections of Points & Crossings as prescribed in IRPWM.

10.6.3 **Classification of defects** : The defect classification shall be made as per provisions given in Item 1(A), 2(A) , 3 (A) and 4(A) of Annexure-II-A of 'Manual for Ultrasonic testing of rails & welds, (Revised-2012)'

However, in zone-2 provisions given in Item 2(A) and 3 (A) of Annexure-II-A of 'Manual for Ultrasonic testing of rails & welds, (Revised-2012)' shall be applicable.

10.6.4 **Action to be taken after detection of defects**: SE/JE (P.Way)/USFD shall impose speed restriction of 30 Kmph or stricter immediately and to be continued till flawed tongue rail is replaced which should be done within 3 days of detection.

CHAPTER 11

ULTRASONIC TESTING TECHNIQUE OF WORN OUT POINT AND SPLICE RAILS PRIOR TO RECONDITIONING BY WELDING AND SWITCH EXPANSION JOINT

11.1 The worn out points and crossings are taken to the Reconditioning Depot for reclamation of the same by suitably depositing hard facing electrode over the worn out areas to enhance the service life and also for effecting savings thereby. As per extant practice, the worn out areas of the wing rails and point and splice are ground for removing loose metals and oxides over the surface before undertaking welding. Freedom from any fatigue crack over the surface to be built-up is also ensured by MPI/DPI before reclamation. As the nose portion of the crossing consisting of the point and splice is subjected to heavy impact and dynamic stresses during service, it is felt necessary to check them ultrasonically to ensure their freedom from any internal flaw prior to reconditioning, so that the defective points and splices can be rejected for ensuring safety in the train operation.

11.2 **Scope**: This testing procedure stipulates the ultrasonic testing techniques of worn out point and splice rails which need reclamation. Zone I of the crossing shall be tested utilising probes fitted in USFD trolley and zone II and III shall be tested by hand probing with 0° and 70° probes wherever necessary for detection of internal flaws **{Fig. 26 (a)}.** The testing is required to be carried out in dismantled condition in the welding depot. It also suggests to subject some vulnerable locations to MPI/DPI to ensure freedom from surface/sub-surface defects.

11.3 **Personnel qualification**: It is essential that evaluation be performed by properly trained and qualified testing personnel.

11.4 **Equipment and accessories**

11.4.1 **Equipment**: Pulse-echo type ultrasonic flaw detector approved by RDSO.

11.4.2 Accessories

(i) **Probes**:

The rail test trolley shall have following probes made of PZT, barium titanate or similar type of piezo electric crystals:

(ii)

(a) Double crystal 4 MHz, 18mm(crystal dia) 0° probe-1 No. fitted in trolley.
(b) Single crystal 2 MHz, 20mm(crystal dia)70° probe- 2 No. fitted in trolley.
(c) Single crystal 2 MHz, 20mm(crystal dia) 70° probe -1 No. for hand probing.

(iii) Battery with specific voltage suitable for the USFD to be used.
(iv) Battery charger
(v) Voltmeter.
(vi) Standard rail piece of 2.5m length having standard simulated defects at standard locations **(Fig.4)**
(vii) Calibration block 60 x 50 x 50 mm of steel grade 45C8 to IS: 1875 – 1992.
(viii) Steel measuring tape.
(ix) IIW-VI or V2 Block

(x) Co-axial cable-2.5m length fitted with BNC connector for connection with single crystal probe.

11.4.3 Pre-requisites

(i) Battery power: Before undertaking testing, check the power of the battery to ensure that it is fully charged.

(ii) Check the correct functioning of the ultrasonic flaw detector on IIW block as per IS: 12666- 1988.

(iii) The couplant should wet the surfaces of the probes and the scanning surfaces properly. Depending upon the availability and feasibility of the testing – water, oil or grease can be used as couplant.

(iv) Calibrate the depth range of USFD with help of calibration block for 300mm depth range (longitudinal wave) with the help of 0° double crystal 4 MHz probe. The equipment is thus calibrated for depth range of 60/30mm per main scale division for longitudinal wave for equipment having 5/10 main scale div. on horizontal scale.

11.5 Checking the sensitivity

11.5.1 0° and 70° probes fitted with the rail tester trolley shall be able to detect 5mm dia flat bottom hole at the foot/5mm dia through hole at web-foot junction and 5mm dia through hole at head respectively of the standard 2.5m long test rail. **(See Fig.4)** and set gain of the USFD so that the flaw signal amplitude is adjusted to 60% of the vertical screen height.

11.5.2 During hand probing by 70° single crystal 2 MHz probe it should be connected with the equipment by a coaxial cable. Turn the probe selector switch to single crystal operation and set the gain of the USFD with 5mm dia drilled hole in the head of the standard rail by side probing. The flaw signal amplitude shall be similarly adjusted to 60% of the vertical screen height.

11.6 Testing procedure {Ref.Fig. 26 (a)}: The points and splices of different turnouts shall be divided into three zones, viz.

Zone –I: (Towards the heel of the crossing)	To be tested by the rail tester trolley according to accessibility utilising 0° and 70° probes.
Zone-II: (Middle of the crossing)	To be tested by 0° and 70° probes provided in the rail tester trolley by hand probing from the rail head top surface.
Zone–III: (Toward the nose of the crossing)	To be tested by the 70° 2 MHz single crystal probe by hand probing at the head portion from both the sides of the head. The web and flange location of zone III shall be tested by the same probe.

Besides the above, the bolt hole locations at the web shall be thoroughly examined visually and magnetic particle/dye penetrate inspection shall be conducted to ensure freedom from cracks since ultrasonic testing of the bolt hole crack on the web is not feasible.

11.7 Acceptance standard

Zone I, II &III: Any point or splice when tested with gain setting as specified in **para11.5.2**, showing any moving signal shall be considered as defective.

11.8 Procedure for ultrasonic testing of stock and tongue rail of switch expansion joint/Improved switch expansion joint (ISEJs).

11.8.1 A number of SEJs/ISEJs have been found to fail in service due to fatigue cracks generated from the bottom of the rail and also from rail head endangering safety. It was therefore considered essential to develop a procedure for detection and classification of defects in SEJs/ISEJs. Details of the procedure are described below.

11.8.2 Scope: This procedure stipulates the ultrasonic testing technique of new stock and tongue rail of SEJs/ISEJs as well as those in service and lays down the acceptable standard with regard to defects noticed. In view of the design of the SEJs/ISEJs, testing is to be accomplished by hand probing up-to accessible location (considering crystal size of the probe and probing area of SEJ/ISEJ).

11.8.3 Accessories:

11.8.3.1 The following Equipment and probes shall be used for ultrasonic examination of SEJs/ISEJs.

a) Equipment: Any RDSO approved model of ultrasonic equipment for Alumino thermic welded rail joints as per RDSO specification Nos. M&C/NDT/129/2005, Rev-II, Aug 2014 or its latest version.

b) **Probes:** The following probes shall be used for ultrasonic examination of SEJs/ISEJs.

(i) 0° Normal probe, 18mm dia./4 MHz, Double crystal for time scale calibration.

(ii) 45°/2MHz, 20x20mm PZT crystal, Single crystal for locating flaws in middle of web-flange area and bolt hole crack.

(iii) 70°/2MHz, 20x20mm PZT crystal, Single crystal for locating flaws in nose of the SEJ/ISEJs.

c) Calibration Block:

(i) A 60mm x 50mm x 50mm rectangular block of steel to grade 45C8 of IS-1875-1992.

(ii) IIW (V1) Blocks for calibration of Angular probes.

11.8.3.2 Couplant: Water/soft grease/thick oil shall be used as couplant.

11.8.3.3 Cables: Co-axial cable for each probe shall be used. The length shall not exceed 2 meters.

11.8.3.4 Standard test piece: A 1000mm long rail piece having nose of SEJ/ISEJs stock shall be used for preparation of standard test piece. One simulated flaw of 3mm x 5mm shall be made in the bottom of flange as shown in **Fig. 26 (b)** for 60 kg rail section and **Fig. 26 (c)** for 52 kg rail section at location A. This simulated flaw shall be used for sensitivity setting of 45° angle probe. Another 5mm. Dia. through hole shall be made in the rail head at location B, 25mm. below the top of the rail surface and away from nose portion (as shown in **Fig. 26 (b)** for 60 kg rail section and **Fig. 26 (c)** for 52 kg rail section) for sensitivity setting of 70° angle probe.

11.8.4 USFD testing by 45^0 Single crystal angle probe: This procedure shall be used for the detection of defects originating from bolt hole and machined edge at bottom of stock/tongue rail of SEJ/ISEJ and gap avoiding rail of ISEJ.

11.8.4.1 Range calibration: The equipment shall be calibrated for 275 mm shear wave depth range by 45^0 angular probe using IIW (V1) block.

11.8.4.2 Sensitivity setting: 45^0/2MHz single crystal probe shall be placed on the rail head at a distance of 175mm (for 60Kg rail section) and 160mm (for 52Kg rail section) approximately from the junction of flange as shown in Fig.26 (b) and Fig. 26(c) respectively. The probe shall be placed so as to direct the beam towards the simulated flaw (Saw-Cut) as shown in Fig. 26(b) for 60 kg rail section and Fig. 26(c) for 52 kg rail section. The probe shall be moved towards the saw cut in zigzag manner so as to get maximum reflection from saw cut. The height of this reflected signal shall be adjusted to 40% of full screen height with the use of gain control knob.

11.8.4.3 Test Procedure: 45^0 angle probe is placed on the head of Stock/tongue rail of SEJ/ISEJ and gap avoiding rail of ISEJ while maintaining the movement towards the nose of SEJ/ISEJ. The probe is moved forward and backward direction on the head directing towards nose and away from the nose of stock/tongue rail of SEJ/ISEJ and gap avoiding rail of ISEJ in the entire machined portion of stock/tongue rail of SEJ/ISEJ and gap avoiding rail of ISEJ.

11.8.4.4 Defect Classification: Any flaw peak of amplitude higher than 20% of full screen height shall be classified as IMR. The defective SEJ/ISEJ should be adequately protected as per Para 11.9 till it is replaced.

11.8.5 USFD testing by 70^0 angle single crystal Probe: This procedure shall be used for the detection of transverse defects originating in head of stock/tongue rail of SEJ/ISEJ and gap avoiding rail of ISEJ.

11.8.5.1 Range calibration: The equipment shall be calibrated for 165 mm shear wave depth range by 70^0 angular probe using IIW (V1) block.

11.8.5.2 Sensitivity setting:70^0/2MHz single crystal probe shall be placed on the rail head at a distance of approximately 70mm from 5mm dia hole in the head as shown in Fig. 26(b) for 60 kg rail section and Fig. 26(c) for 52 kg rail section, so as to direct the beam towards the hole. The reflection from 5mm dia hole shall be adjusted to 60% of full screen height with use of gain control.

11.8.5.3 Test Procedure: 70^0 angle probe is placed on the head of stock/tongue rail of SEJ/ISEJ and gap avoiding rail of ISEJ while maintaining the movement towards the nose of SEJ/ISEJ. The probe is moved forward and backward direction on the head directing towards nose and away from the nose in the entire machined portion of stock/tongue rail of SEJ/ISEJ and gap avoiding rail of ISEJ.

11.8.5.4 Defect Classification: Any flaw peak of amplitude higher than 20% of full screen height shall be classified as IMR. The defective SEJ/ISEJ should be adequately protected as per Para 11.9 till it is replaced.

11.8.6 USFD testing by 0^0 double crystal, 4 MHz probe: This procedure shall be used for the detection of horizontal defects in head, web and web-foot junction of stock/tongue rail of SEJ/ISEJ.

11.8.6.1 Range calibration: The equipment shall be calibrated for 300 mm longitudinal wave depth range by 0^0 (normal) probe using rectangular block of 60mm x 50mm x 50mm steel to 45C8, IS-1875-1992.

11.8.6.2 Sensitivity setting: 0^0/4 MHz double crystal probe shall be placed on the rail head to get reflected signal from back end of the rail. The reflected signal shall be set to 60% of full screen height with the use of gain control knob.

11.8.6.3 Test Procedure: The 0^0 probe shall be moved on the top of the stock/tongue rail SEJ/ISEJ to facilitate detection of horizontal defect originating from head, web, web-foot junction and bottom of the SEJ/ISEJ.

11.8.6.4 Defect Classification: Any flaw peak of amplitude higher than 20% of full screen height or partial/complete loss of backwall echo shall be classified as IMR. The defective SEJ/ISEJ should be adequately protected as per Para 11.9 till it is replaced.

11.8.7 Testing frequency: Testing frequency of stock and tongue rail of SEJ/ISEJs and gap avoiding rail of ISEJ shall be same as that for normal track as stipulated in the Para 6.6.1.1, without considering any reduced frequency testing period.

11.9 Action to be taken after detection of defect: On detection of defect in stock and tongue rail of SEJ/ISEJ and gap avoiding rail of ISEJ, SSE/JE (P.Way)/USFD shall impose speed restriction of 20 KMPH or stricter immediately and communicate to sectional SSE/JE (P.Way) about the flaw in SEJ/ISEJs with its location, who shall ensure the protection of defective SEJ/ISEJs by deputing a permanent watchman till the SEJ/ISEJs is replaced. The defective SEJ/ISEJ shall be replaced within 3 days of detection.

***

CHAPTER 12

ULTRASONIC TESTING OF RAILS BY SPURT CAR

12.1 Ultrasonic testing of rails by SPURT Car has to be carried out as per "Indian Railway Standard Specification for Ultrasonic Testing of Rails/Welds using Vehicular Systems Revised -2020 (Document no. IRS-T-52)" along with its latest revision and updated correction slips.

***

CHAPTER 13

REPORTING AND ANALYSIS OF RAIL/WELD FAILURES

13.1 After each fracture FAILURE REPORT shall be prepared as per proforma given in **Annexure –III and Annexure- IV** by SE/JE(P. Way) and Divisions respectively.

13.1.1 All the fractured rail/weld pieces of 150mm length on each side of fractured face, except those attributable to known extraneous causes such as fractures resulting from accidents, series of fractures resulting from passage of flat wheels, etc., shall be sent to Chemist and Metallurgist for detailed investigation in the following cases:

a) Rail failure within 5 years of primary renewal/Spate of premature rail failures.
b) Weld failure within one year of execution.
c) Repetitive rail fractures of same rolling mark.

13.1.2 The Chemist & Metallurgist should submit consolidated investigation report to Headquarters and Director/M&C/RDSO for making out a management information report based on investigation carried out on the above rail failures. The annual briefs made out by RDSO on the analysis of rail fracture must cover these details. Director (M&C) may call for specific samples from Chemist & Metallurgist for confirmation of their findings.

13.1.3 In the following instances, the samples of rail/weld shall be forwarded to Director/M&C/RDSO.

(a) Rail/ weld samples involved in accident/derailment
(b) Rail samples of imported origin failed in service within guarantee period.

13.2 All the failure reports and defects detected are required to be compiled in the form of **Annexure VI** & **VII** at divisional level. Each weld failure shall be analysed by sectional Sr. DEN/DEN, to ascertain whether the failure is sudden, due to impact or inherent defects such as lack of fusion, micro porosities, formation of fin etc. The data including causes, nature and frequency of defects shall be analysed and managerial decisions required for preventive/ corrective action shall be taken promptly.

***

ANNEXURE- I

Sketch showing details of standard test piece for ultrasonic testing of symmetrical rail section
----------Deleted----------

ANNEXURE- IA

Sketch showing details of standard test piece for ultrasonic testing of asymmetrical rail section

----------**Deleted**----------

Annexure-IIA
(Para 6.3)

CLASSIFICATION OF RAIL/WELD DEFECTS FOR NEED BASED CONCEPT OF USFD

Note : "Any sweeping signal on horizontal baseline that does not extend beyond 2.5 divisions from the left edge of the screen or vice versa shall be recorded as Gauge Corner Cracking (GCC) and not as OBS".

For Rail Defects

S. No	Probe used	Nature of defect	Oscillogram pattern	Classification
1.	Normal probe 4MHz (sensitivity set with respect to 100% back wall signal height from rail bottom)	**A) Within fishplated area -** (i) Any horizontal defect in head web or foot of length equal to distance between rail end and first bolt hole and connected with the rail head.	No back echo before or after appearance of bolt hole echo with Flaw echo with or without multiples **OR** Drop in back echo before or after appearance of bolt hole echo with flaw echo with or without multiple	IMR
		(ii) Any horizontal defect connecting both bolt holes	No back echo between bolt hole echo. Flaw echo with or without multiples.	IMR
		(iii) Any defect originating from bolt holes and progressing at an angle towards head-web junction or web-foot junction.	No back echo before or after appearance of bolt hole echo with or without flaw echo	IMR
		B) Outside fish plated area - a) Any horizontal defect progressing at an angle in vertical plane in the rail at the following locations in the track: i) In tunnel & on tunnel approaches (100m either side) ii) On major bridges & bridge approaches (100m either side) iii) In the vicinity of holes near the weld (50 mm for old AT weld and 75mm for new AT weld from the centre of weld on either side of weld)	No back echo with flaw echo (shifting/without shifting) for any horizontal length OR No back echo and no flaw echo	IMR
		b) Any horizontal defect progressing at an angle in vertical plane in the rail at track locations other than (a) above.	No back echo with flaw echo (shifting/without shifting) for horizontal length $\geq$ 20mm No back echo with or without shifting flaw echo for horizontal length< 20 mm	IMR OBS

S. No	Probe used	**Nature of defect**	Oscillogram pattern	Classification
		C) Vertical longitudinal split (piping)	In case of partial/complete loss of back echo, side probing shall be carried out with 0° probe, if any flaw echo with/ without multiples is observed (in any length)	IMR
2.	70° 2MHz Centre Probe (Sensitivity set with 12mm dia. Standard hole in rail head 25mm from rail top) <u>For non 'D' marked rails on double/multiple line sections</u>	A) Any transverse defect in the rail head at the following locations in the track i) In tunnel & on tunnel approaches (100m either side) ii) On major bridges & bridge approaches (100m either side) iii) In the vicinity of holes near the weld (50 mm for old AT weld and 75mm for new AT weld from the centre of weld on either side of weld) B) Any transverse defect in the rail head at track locations other than A) above	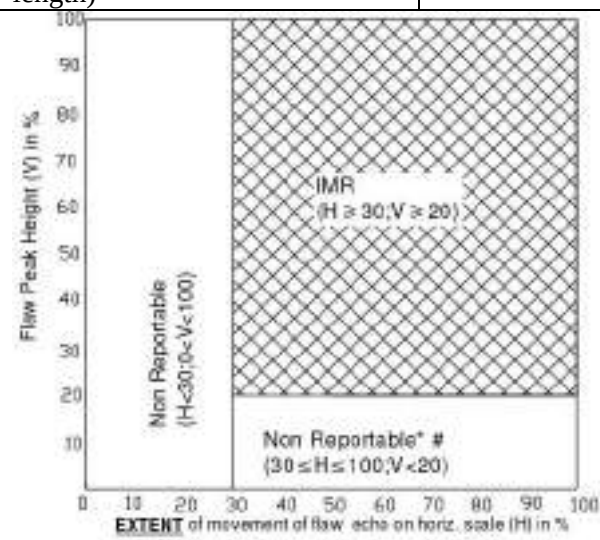 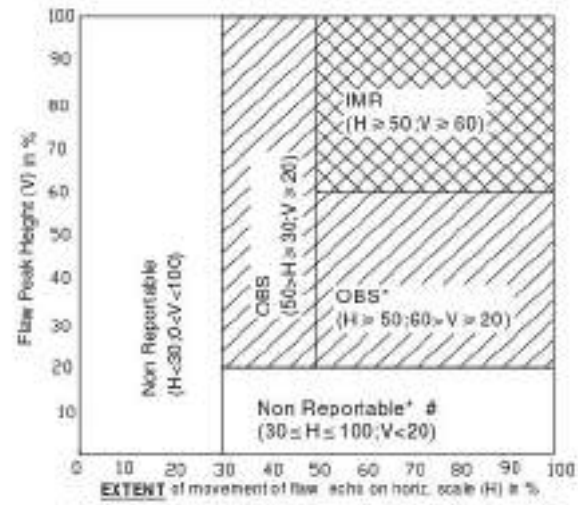	

S. No	Probe used	Nature of defect	Oscillogram pattern	Classification
3.	70° 2MHz (Centre) Probe (sensitivity set with 12mm dia. Standard hole at rail head 25mm from rail top and with additional gain of 10dB thereon). <u>For all single line sections and 'D' marked rails on double /multiple line sections</u>	A) Any transverse defect in the rail head at the following locations in the track i) In tunnel & on tunnel approaches (100m either side) ii) On major bridges & bridge approaches (100m either side) iii) In the vicinity of holes near the weld (50 mm for old AT weld and 75mm for new AT weld from the centre of weld on either side of weld)	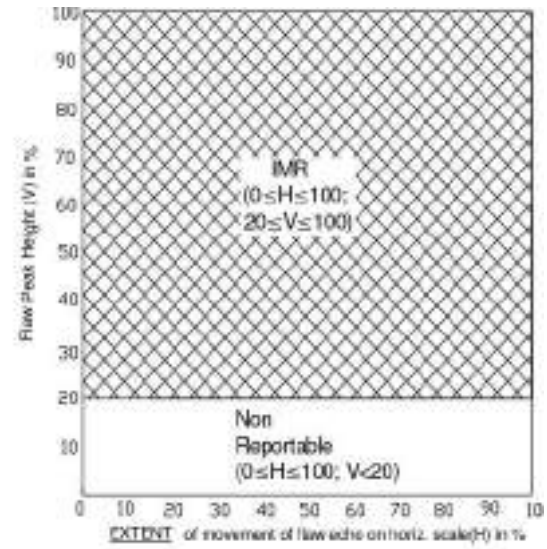	
		B) Any transverse defect in the rail head at track locations other than A) above	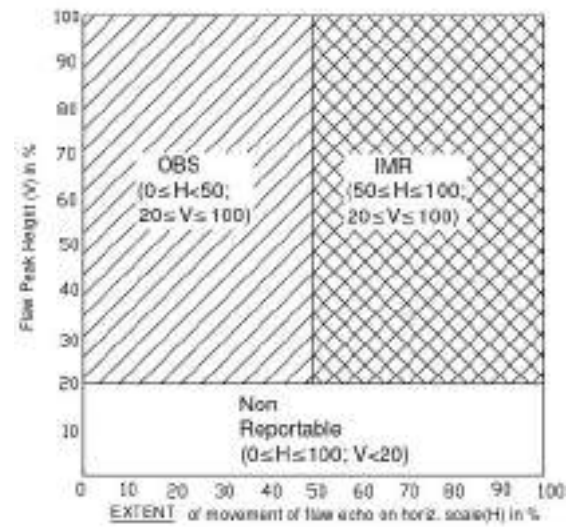	

4.	70^0 probes Gauge Face & Non-gauge Face side (Sensitivity set on 5mm FBH)	A) Any transverse defect in the rail head on gauge face side/ Non-gauge Face at the following locations in the track i) In tunnel & on tunnel approaches (100m either side) ii) On major bridges & bridge approaches (100m either side) iii) In the vicinity of holes near the weld (50 mm for old AT weld and 75mm for new AT weld from the centre of weld on either side of weld) B) Any transverse defect in the rail head on gauge face/ Non-gauge Face side at track locations other than A) above	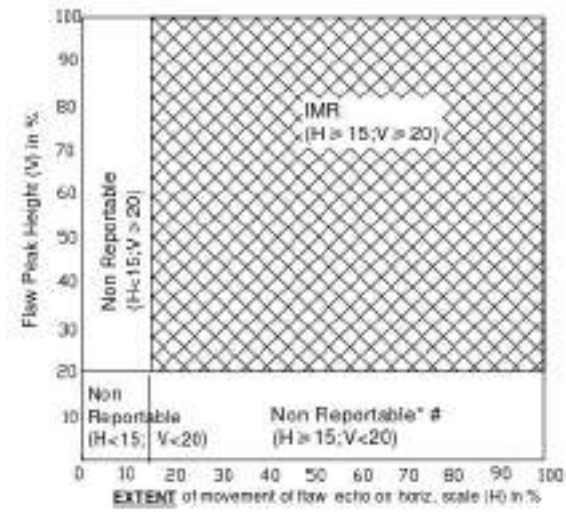 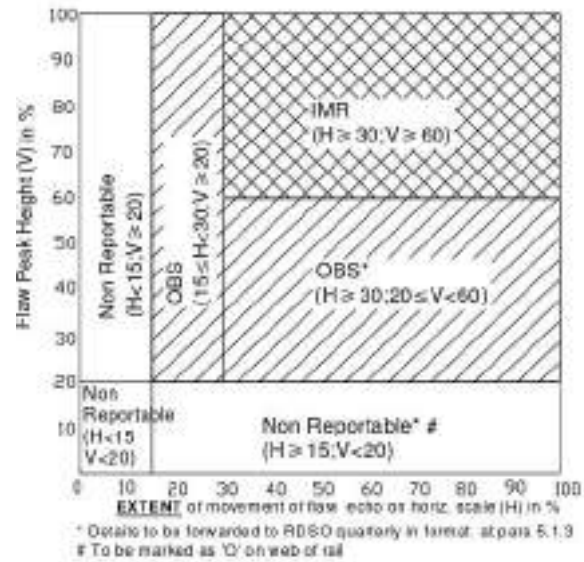

SNo	Probe Used	Nature of Defect	Oscillogram Pattern	Classification
5.	45^0 probes mounted in test rig (sensitivity set to 100% with respect to reflection signal received from opposite face of rail head)	A) Any transverse defect in the rail head, with scabs/wheel burn on top surface, at the following locations in the track i) In tunnel & on tunnel approaches (100m either side) ii) On major bridges & bridge approaches (100m either side) iii) In the vicinity of holes near the weld (50 mm for old AT weld and 75mm for new AT weld from the centre of weld on either side of weld)	Loss of signal height equal to or more than 20% of full scale height.	IMR
		B) Any transverse defect in the rail head with scabs/wheel burn on top surface at track locations other than A) above.	Loss of signal height equal to or more than 80% of full scale height.	IMR
			Loss of signal height equal to or more than 20% but less than 80% of full scale height	OBS
6	37^0 2MHz Centre Probe (Sensitivity set on 5mm saw cut on bolt hole)	Any defect originating from bolt holes and progressing at an angle towards head-web junction or web-foot junction.	During testing any moving signal observed by 37^0 in web region (i.e. beyond 2.3 div in horizontal scale) other than standard peak from bolt hole, bond wire hole etc.	IMR

Annexure II B
(Para 6.5.1)

Weld defects (AT+FBW)

S.No.	Probe used	Nature of defect	Oscillogram pattern	Classification
1.	Normal probe 4MHz (sensitivity set with respect to 100% back wall signal height from rail bottom)	A) Any horizontal defect progressing at an angle in vertical plane in the rail at the following locations in the track : i). In tunnel & on tunnel approaches (100m either side) ii). On major bridges & bridge approaches (100m either side) iii) In the vicinity of holes near the weld (50 mm for old AT weld and 75mm for new AT weld from the centre of weld on either side of weld)	No back echo with flaw echo (shifting or without shifting)	IMRW
		B) Any horizontal defect progressing transversely in the rail at track locations other than A) above	No back echo with flaw echo (shifting or without shifting)	OBSW

S.No.	Probe used	Nature of defect	Oscillogram pattern	Classification
2.	70° 2MHz Centre probe (Sensitivity set with 12mm dia. Standard hole at rail head 25mm from rail top)	A) Any transverse defect in the rail head at the following locations in the track i) In tunnel & on tunnel approaches (100m either side) ii) On major bridges & bridge approaches (100m either side) iii) In the vicinity of holes near the weld (50 mm for old AT weld and 75mm for new AT weld from the centre of weld on either side of weld)	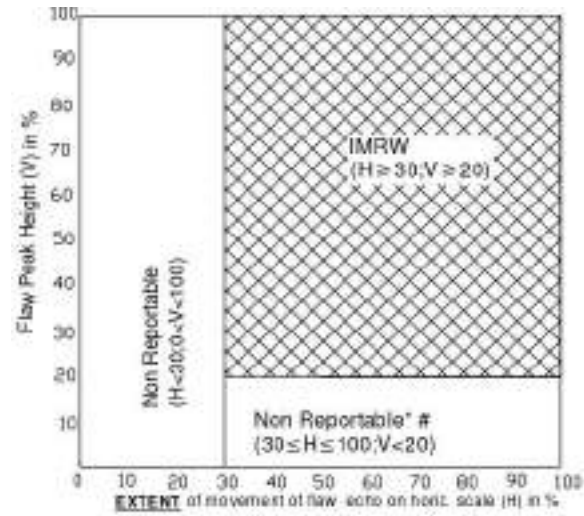	
		B) Any transverse defect in the rail at track locations other than A) above	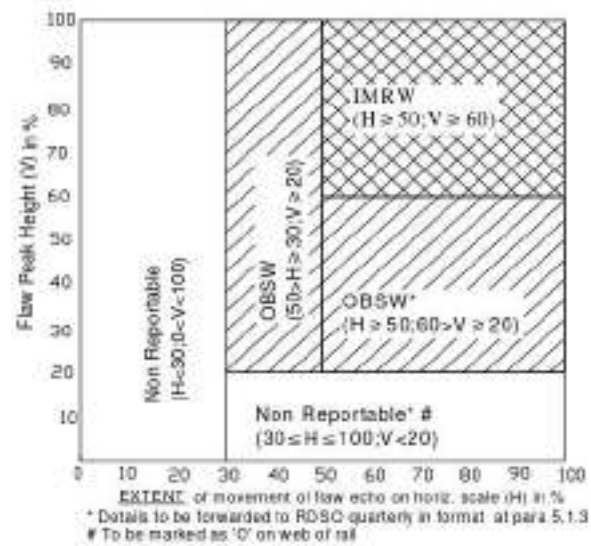	

3.	70^0 probes Gauge Face & Non-gauge Face side Probe (Sensitivity set on 5mm FBH)	A) Any transverse defect in the rail head on gauge face/ Non-gauge Face side at the following locations in the track i) In tunnel & on tunnel approaches (100m either side) ii) On major bridges & bridge approaches (100m either side) iii) In the vicinity of holes near the weld (50 mm for old AT weld and 75mm for new AT weld from the centre of weld on either side of weld) B) Any transverse defect in the rail head on gauge face/ Non-gauge Face side at track locations other than A) above	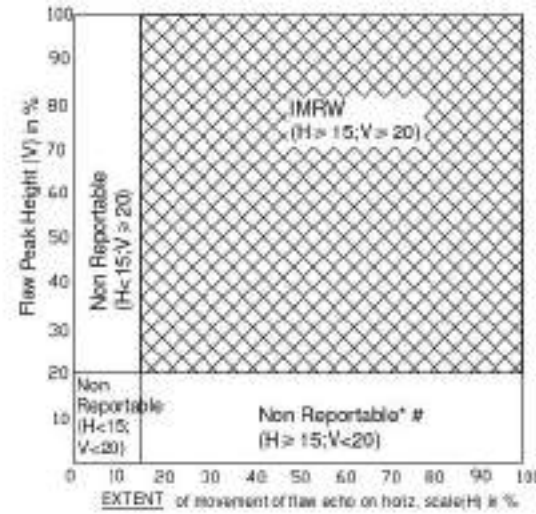 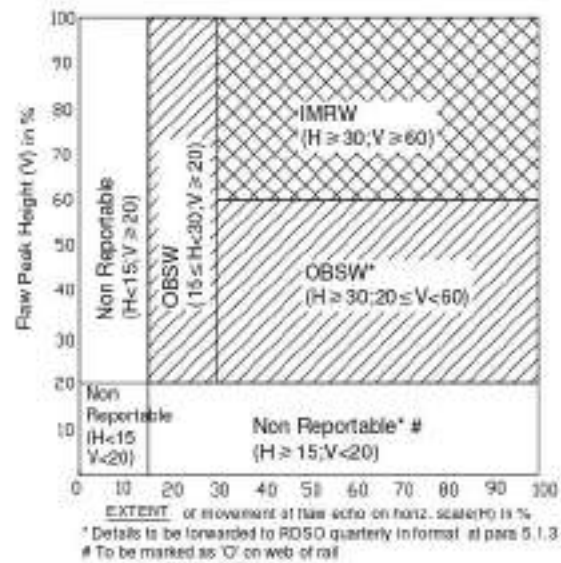

ANNEXURE-III

(Para 13.1)
(To be prepared and submitted by PWIs)

PROFORMA FOR REPORTING RAIL/ WELD REPLACEMENT OR REMOVAL ON DETECTION BY USFD

1.	SE/JE(P.WAY)	:	(STATION CODE)
2.	BLOCK SECTION	:	(Station code - Station code)
3.	LINE	:	
a)	UP/DN/Single	:	Upline-1, Down Line-2, Single Line-3
b)	BG/MG /NG/Others	:	BG-1, MG-2, NG-3 & others-4
c)	Rail No./ Weld No.	:	One digits (within TP)
d)	Right hand/ Left hand	:	RH-1, LH-2
4.	GMT (TOTAL) (for released rails add previous traffic carried)	:	0-50, 51-100,101-150,151- 200, 201-250, 251- 300, 301-350 , 351- 400, 401-450, 451-500 > 500 1 2 3 4 5 6 7 8 9 10 11
5.	KM & TP	:	(8 digits - 4 for Km / 2 for TP-2 for TP)
6.	STRAIGHT/CURVE	:	Straight-0, Curve-(indicate degree of curvature in one digit)
7.	INNER/ OUTER RAIL IN CASE OF CURVE	:	Inner – 1, Outer - 2
8.	(a) TYPE OF FAILURE	:	FRACTURE-1, REMOVAL AFTER DETECTION-2
	(b) Date of fracture/removal		6 digits (dd/ mm/ yy)
	(c) Gap at the time of fracture		2 digits (mm)
9.	RAIL/WELD	:	RAIL-1, AT WELD-2 (Fracture within 100mm of weld to be considered as weld failure) FB Weld-3, Gas Pressure Weld-4
10.	SECTION OF RAIL	:	60kg-1, 52kg-2, 90R-3, 75R-4, 60R-5, 50R-6
11.	TYPE OF RAIL	:	72 UTS-1, 90 UTS-2, Head Hardened-3
12.	ROLLING MARK OF RAIL	:	
13.	HOT STAMPING NUMBER/ CAST NUMBER	:	

14.	MONTH & YEAR OF ORIGINAL/ SECONDARY LAYING	:	Two digits for month & two digits for year : suffix P Two digits for month & two digits for year : suffix S
15.	TOTAL NUMBER OF YEARS IN SERVICE	:	Two digits
16.	MONTH AND YEAR OF WELDING	:	Two digits for month & two digits for year
17.	(a) TYPE OF SLEEPER (b) TYPE OF FITTINGS (c) SLEEPER DENSITY (numbers per Km)	:	PRC-1, ST-2, CST-3,WOODEN-4, OTHERS-5 Elastic Fastening-1, Conventional-2 1660-1, 1540-2, less than 1540-3
18	BALLAST CUSHION (in mm)	:	Three digits
19.	IN CASE OF AT WELD	:	TPP-1, ITC-2, HTI-3, SAGAR-4, OBEROI-5 Raybon – 6, Morwel – 7, Deptt.- 8, Indiana – 9, Others - 10
20.	TYPE OF AT WELDING	:	Conventional–1,SKV-2,75mm GAP-3, Combination Joint-4
21	LAST USFD CLASSIFICATION:		Good-1, IMR-2, IMRW-3, OBS-4, OBSW-5, DFWO-6, DFWR-7
22.	FLAW DETECTED/ UNDETECTED	:	
	a) IN CASE OF RAIL FRACTURE	:	Rail with detected flaw–1, Flaw undetected by USFD– 2
	b) IN CASE OF WELD FRACTURE	:	Weld with detected flaw–3,Flaw undetected by USFD– 4
23.	CAUSE OF FRACTURE		
	a) In Case of Rail fracture	:	Inherent manufacturing defect –1, Corrosion –2, Bad maintenance-3, Fault of the rolling stock-4, Sudden-5, Due to wheel burn/ scabbs-6, other causes-7
	b) In Case of Weld	:	Poor quality of welds-1, Corrosion-2, Bad maintenance-3, fracture Fault of the rolling stock-4, Sudden–5, Any other causes–6
24.	FRACTURE CODIFICATION	:	Four digits

25.	ORIGIN OF DEFECT AS DETECTED BY USFD	: Head-1, Web-2, Foot-3, No origin-4
26.	AVOIDABLE/ UNAVOIDABLE	: Avoidable-1, Unavoidable -2
27.	TYPE OF USFD FOR RAIL AND WELD	: Need based – 1, Conventional-2
28.	MONTH & YEAR OF LAST USFD	
	(a) FOR RAIL(including weld) (0^0 +70^0 Probe)	: Two digits each for month and year
	(b) Flange testing of weld (70^0 2 MHz Probe)	: Two digits each for month and year
29.	FOR WELDS IF NOT TESTED, WHETHER FISH PLATED BY JOGGLED FISH PLATE WITH TWO TIGHT CLAMPS	: YES-1, NO-2
30.	IN CASE OF WELD FRACTURE WHETHER BOLT HOLES AVAILABLE	: YES-1, NO-2
31.	IN CASE OF CWR/LWR	
	a) Date of last distressing	: Two digits each for date, month & year
	b) distressing temperature	: Two digits
32.	IN CASE OF SWR/FP	
	a) Date of last gap survey	: Two digits each for date, month & year
	b) Date of rectification	: Two digits each for date, month & year
33.	IN CASE OF CRACK ORIGINATING FROM BOLT HOLE	
	a) Date of oiling/greasing	: Two digits each for date, month & year
	b) Were the bolts tight	: Yes-Y, No-N
	c) Were the bolt holes chamfered	: Yes-Y, No-N
	d) In case of elongation, size of bolt hole	: (Two digits in mm)

	e) Sleeper spacing	: Normal-1, Joint sleeper spacing-2
34.	IN CASE OF FAILURE OF AT WELDS WITHIN 2 YEARS	: Yes-Y, No-N
35.	IN CASE OF FAILURE OF FBW	
	a) Name of welding plant	: Station code
	b) Panel No.	: (Three digits)
	c) Joint No.	: (Two digits)
36.	LOCATION OF FRACTURE (For rail fracture)	: Fish plated Zone (Bolt hole area)- 1, Mid rail-2 SEJ-l , Glued Joint-4, Point &Crossing-5

ANNEXURE-IV
(Para 13.1)

DETAILS REQUIRED FOR RAIL/WELD FAILURE ANALYSIS

(Only for guidance for generating data at Division's level)

1	RAILWAY ZONE	:	(CR-01, ER-02, NR-03, NER-04, NFR-05, SR-06, SCR-07, SER-08, WR- 09, ECR-10, ECoR-11, NCR-12, NWR-13,SECR-14, SWR-15, WCR-16)
2	DIVISION	:	As per code
3	SE/JE(P. WAY)	:	(Station code)
4	SECTION (NAME OF LINE OR BRANCH)	:	(Station code)
5	BLOCK SECTION	:	(Station code-Station code)
6	DATE OF FRACTURE/REMOVAL	:	Two digits each for date, month and year
7	TIME OF DETECTION	:	4 Digit s(2 for hours/2 for minutes)
8	ROUTE CLASSIFICATION	:	(A, B, C, D, DS, ES, E, Q, R1,R2,R3, S)
9	LENGTH OF BLOCK SECTION (in KM)	:	(Two digits)
10	MAX. PERMISSIBLE SPEED	:	(Three digits)
11	MAX. PERMISSIBLE AXLE LOAD	:	20.32T-1, 22.1T-2, 22.86T-3, above 22.86T-4, MG-5
12	GMT (ANNUAL)	:	0-5,5-10,10-15,15-20,20-25,25-30,30-35,35-40,> 40 1 2 3 4 5 6 7 8 9
13	CWR/LWR/SWR/FISH PLATED	:	CWR-1, LWR-2,SWR-3,FISH PLATED-4
14	LINE (a) Up/down/single (b) BG/MG/NG/Others	:	 Upline-1, Down line-2, single line-3 BG-1, MG-2, NG-3, Others-4
15	RAIL NUMBER/ WELD NUMBER IN TP	:	(two digits)
16	RAIL – RIGHT HAND OR LEFT HAND	:	RH-1, LH-2
17	GMT (TOTAL) (for released rails add previous traffic carried)	:	0-50, 51-100,101-150,151- 200, 201-250, 251- 300, 301-350 , 351- 400, 401-450, 1 2 3 4 5 6 7 8 9 451-500, > 500 10 11

18	KM & TP	:	(8 digits-4 for Km/2 for TP-2 for TP)
19	STRAIGHT/CURVE	:	Straight-0 Curve-(indicate degree of curvature in one digit
20	INNER/OUTER RAIL IN CASE OF CURVE	:	Inner-I, Outer-2
21	a) TYPE OF FAILURE b) Date of Fracture/Removal c) Gap at the time of fracture	:	Fracture-1, Removal After Detection-2 6 digits(dd/mm/yy) 2 digits (mm)
22	RAIL/WELD (Fracture within 100mm of weld to be considered as weld failure)	:	RAIL-1, AT Weld-2, FB Weld-3, Gas Pressure Weld-4,
23	SECTION OF RAIL	:	60kg-1, 52kg-2, 90R-3, 75R-4, 60R-5, 50R-6
24	TYPE OF RAIL	:	72 UTS-1, 90 UTS-2, Head Hardened-3
25	ROLLING MARK OF RAIL	:	
26	HOT STAMPING NUMBER/CAST NUMBER	:	
27	MONTH & YEAR OF ORIGINAL SECONDARY LAYING/WELDING	:	Two digits for month and two digits for year: Suffix P Two digits for month and two digits for year: Suffix S
28	TOTAL NUMBER OF YEARS IN SERVICE	:	Two digits
29	SLEEPER TYPE	:	PRC-1, ST-2, CST-3, WOODEN-4, OTHERS-5
30	FITTING TYPE	:	Elastic fastening-1, conventional-2
31	SLEEPER DENSITY (numbers per Km)	:	1660-1, 1540-2, less than 1540-3
32	BALLAST CUSHION (in mm)	:	Three digits
33	TYPE OF AT WELD	:	Conventional-1, SKV-2, 75mm gap-3, Combination Joint-4
34	IN CASE OF AT WELD	:	TPP-1, ITC-2, HTI-3, SAGAR-4, OBEROI - 5 Raybon -6, Morwel-7, Deptt. – 8,Indiana–9, Others-10
35	LAST USFD CLASSIFICATION	:	Good-1, IMR-2, IMRW-3, OBS-4, OBSW-5, DFWO-6, DFWR-7
36	FLAW DETECTED/UNDETECTED a) IN CASE OF RAIL FRACTURE	:	 Rail with detected flaw – 1, Flaw undetected by

			USFD – 2
	b) IN CASE OF WELD FRACTURE		Weld with detected flaw – 3, Flaw undetected by USFD– 4
37	CAUSE OF FRACTURE	:	
	a) IN CASE OF RAIL FRACTURE		Inherent manufacturing defect –1, Corrosion –2, Bad maintenance-3, Fault of the rolling stock-4, Sudden-5, Due to wheel burn/ scabs -6, other cause-7
	b) IN CASE OF WELD FRACTURE		Poor quality of welds-1, Corrosion-2, Bad maintenance-3, Fault of the rolling stock-4, Sudden-5, any other cause-6
38	FRACTURE CODIFICATION	:	Four digits
39	Origin of defect as detected by USFD	:	Head-1, Web-2, Foot-3, No origin-4
40	AVOIDABLE/UNAVOIDABLE	:	Avoidable-1, Unavoidable -2
41	TYPE OF USFD FOR RAIL AND WELD	:	Need based – 1, Conventional-2
42	MONTH & YEAR FOR LAST USFD	:	
	a) FOR RAIL (including weld) (0^0 +70^0 Probe)		Two digits each for month and year
	b) Flange testing of weld (70^0 Probe)		Two digits each for month and year
43	FOR WELDS IF NOT TESTED, WHETHER FISH PLATED BY JOGGLED FISH PLATE WITH TWO TIGHT CLAMPS	:	YES-1, NO-2
44	IN CASE OF WELD FRACTURE WHETHER BOLT HOLES AVAILABLE	:	YES-1, NO-2
45	IN CASE OF CWR/LWR	:	
	a) Date of last destressing		Two digits each for date, month and year
	b) Destressing temperature		Two digits
46	IN CASE OF SWR/FP	:	
	a) Date of last gap survey		Two digits each for date, month and year
	b) Date of rectification		Two digits each for date, month and year
47	WHETHER FAILURE OF AT WELDS WITHIN 2 YEARS	:	YES-Y, NO-N
48	IN CASE OF CRACK ORIGINATING FROM BOLT HOLE	:	

	a) Date of oiling/greasing		Two digits each for date, month and year
	b) Were the bolts tight		Yes-Y, No-N
	c) Were the bolt holes chamfered		Yes-Y, No-N
	d) In case of elongation, size of bolt hole		(two digits in mm)
	e) Sleeper spacing		Normal-1, joint sleeper spacing-2
49	IN CASE OF FAILURE OF FBW	:	
	(a) Name of welding plant		Station code
	(b) Panel No.		(three digits)
	(c) Joint No.		(Two digits)
50	LOCATION OF FRACTURE (For Rail Fracture)	:	Fish plated zone (Bolt hole area)-1, Mid rail-2, SEJ-3, Glued Joint-4, Points & Crossings-5

ANNEXURE –V
(Para 6.8)

CHECK LIST OF ULTRASONIC TESTING OF RAIL/WELDS

DIVISION----------SECTION---------- LINE: UP/DN/SINGLE
ROUTE----------Km. FROM----------TO----------DATE----------

1. Name of the operators then trained by RDSO Last refresher course done
   i) ---------- ---------- ----------
   ii) ---------- ---------- ----------

2. Method of Testing : Conventional/Need Based
3. Rail section &Brand Mark : …….
4. Annual GMT : …….
5. Whether within service life : …….
6. Frequency : …….
7. Date of last Testing : …….
8. Reason for overdue if overdue : …….
9. Type of USFD M/C : …….
10. Model, Manufacturing Year & M/C no. : …….
11. Visual condition of electronic unit :Very Good/Good/Satisfactory/Not satisfactory
12. Visual condition of trolley :Very Good/Good/Satisfactory/Not satisfactory
13. Date of calibration of M/C : (to be filled up from M/C register)
14. Date of sensitivity setting of M/C : (to be filled up from M/C register)
15. Date of checking of characteristics : (to be filled up from M/C register)
16. Fuction of Controls : …….
17. Alignment of probes & lifting system : …….
    (with respect to the center line)
18. Watering arrangement of probes : …….
19. Date of change of last probes : …….
    with probe details

20. Condition of probes:

Types of probe	Right hand side					Left hand side					70° 2 MHz (Flange testing)	45° 2 MHz	70° 2 MHz side looking
Description	0°	70^oF	70^oB	37^oF	37^oB	0°	70^oF	70^oB	37^oF	37^oB	(Flange testing)		(Flange testing)

Working/ Not working													
Condition of shoes													

21. i) Watering condition of Battery : …….
ii) Year of procurement of battery : …….
22.Condition of Audio Alarm : Sounding/ Not Sounding
23.Checking spares with the M/C : Available/ Not available

24. Testing knowledge of SE/JE (P.WAY)
i) Criteria for marking defects and calibration and sensitivity setting of M/C : …….
ii) Criteria for periodicity of USFD testing : …….

25.Date of Test check by : (i) AEN
(ii) Sr. DEN/DEN

26.Test check of Last days work : Date of testing
a) Rail testing :Test checked from Km……to Km……
Classification of defects confirmed for all markings(IMR/REM/OBS) : Yes/No
If No, No. of markings not confirmed : ……...Nos.
Whether any defect found extra (missed during regular testing) : Yes/No
If Yes, No. of such defects and classification: …… Nos.
b) WELD testing :No. of Welds test checked…….Nos.
Type of welds :SKV/Conventional AT/FB
Whether testing results confirmed for all : Yes/No
If No, No. of the welds differing detected results: ……. Nos.

27. General Observation :
(i) ……
(ii) ……
(iv) ……
(v) ……

Signature
Name of Inspecting official……..
Designation …….Date …….

ANNEXURE –VI
(Para -13.2)

MASTER REGISTER FOR DEFECTS DETECTED AND RAIL FRACTURES

S. No	Date	Km	Ref. To FR no.	Code	Defects in rail other than originating from bolt hole		Defects in rail originating from Bolt hole	Rail fractures other than originating from bolt hole				Rail fractures originating from bolt hole	Remarks
					IMR	OBS		Rail with detect-ed flaw (01)	Flaw un-detected by USFD (02)	Sudden fractures (03)	Any other causes (04)		

ANNEXURE – VII
(Para - 13.2)

MASTER REGISTER FOR DEFECTS DETECTED AND WELD FRACTURES

S.No.	Date	Km.	Ref. To FR no.	Code	A.T. weld defects				A.T. weld fractures				FBW fractures	Remarks
					IMRW	OBSW	DFWO	DFWR	Weld with detected flaw (05)	Flaw undetected by USFD (06)	Sudden fractures (07)	Any other Causes (08)		

Note: Entries in column 05 and 06 above shall clearly indicate type of defect such as lack of fusion, porosities, formation of fin etc

ANNEXURE-VIII
(Para 4.3.1)

INSPECTION OF RAIL TESTER AND WORK OF PWI/ (USFD)

Name of SE/JE (P.WAY)/USFD, Grade & HQ.

Trained by RDSO during.

Last course attended at RDSO…

MACHINE INSPECTED BY SHRI ……
DATE OF INSPECTION…….

1. MACHINE

i) Make and Sr. No. of the machine
   a) SRT(ECIL/VIBRONICS/EEC/Paras/Others) …
   b) DRT(EEC/PARAS/Others)

ii) Month & Year of procurement of machine

iii) Function of controls.
(On/Off, Gain, H. Shift, Depth,
Energy & Reject etc.)

iv) Brightness of the machine.
(Base line and flaw peaks)

v) Working of the junction box.
(All terminals)

vi) Condition of the probe cables
(Connected cables and BNC's).

vii) Condition of probes-0^0, 70^oF & B ,
37^0 F & B and $70^0$2 MHz, $45^0$2MHz,
$70^0$2 MHz SLP (with respect to wear & sensitivity)

viii) Alignment of probes & lifting system.
(With respect of centre line.)

ix) Condition of shoes of probes (Un-even wear).
Provision of 0.2mm gap.

x) Watering arrangements.
(Proper and adequate supply
to different probes).

xi) Checking spares with machine (Wheels-2, Normal probe – 1, 70^0 F & B-1, $70^0$2 MHz-1, 37^0 F & B-1, 45^o2MHz - 2 &70^0 2 MHz SLP – 1, probe shoe, probe holder, battery)

xii) Working condition of Batteries. (Voltage and Specific Gravity) & charging system

xiii) Year of procurement of Battery.

xiv) Condition of Trolley Wheels.

xv) Tools with machine.

xvi) General up-keep of machine and trolley

2. CALIBRATION & SENSITIVITY SETTING OF MACHINE:

i) Availability of IIW Block, multimeter, Standard rail piece with artificial flaws and Steel block.
ii) Checking of operating characteristics by IIW Block last done.
iii) Sensitivity setting of machine last done and gain level employed.
iv) Checking of calibration and sensitivity setting of machine.

3. QUALITY OF TESTING: Sec.-------To------LINE(Single/UP/DN.)
Kms/From--------To----------

i) Check of last days/week/month work (Comparison with last round testing) by SE/JE (P WAY.)/ (USFD)

ii) Checking of IMR/DFWR of Rails/Welds

4. TESTING KNOWLEDGE OF SE/JE (P WAY):

i) Criteria for marking defects and calibration and sensitivity setting of machine.

ii) Criteria for periodicity of USFD testing. (As per criteria laid down by Railway Board.)

iii) Policy and latest instructions of USFD.

Signature of Inspecting Officer

Fig.1: Arrangement of probes for testing of new rails in steel plants

---------- **Deleted**----------

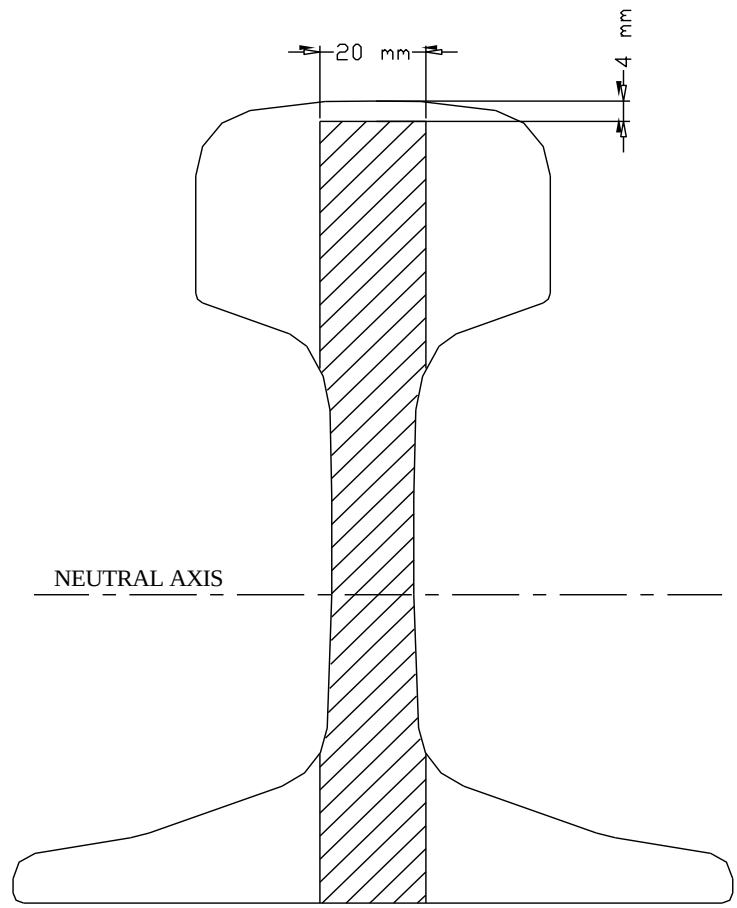

FIG. 2A: AREA COVERED BY NORMAL (0°) PROBE

(FOR A.T. WELD,AREA BELOW NEUTRAL AXIS REMAINS UNTESTED)

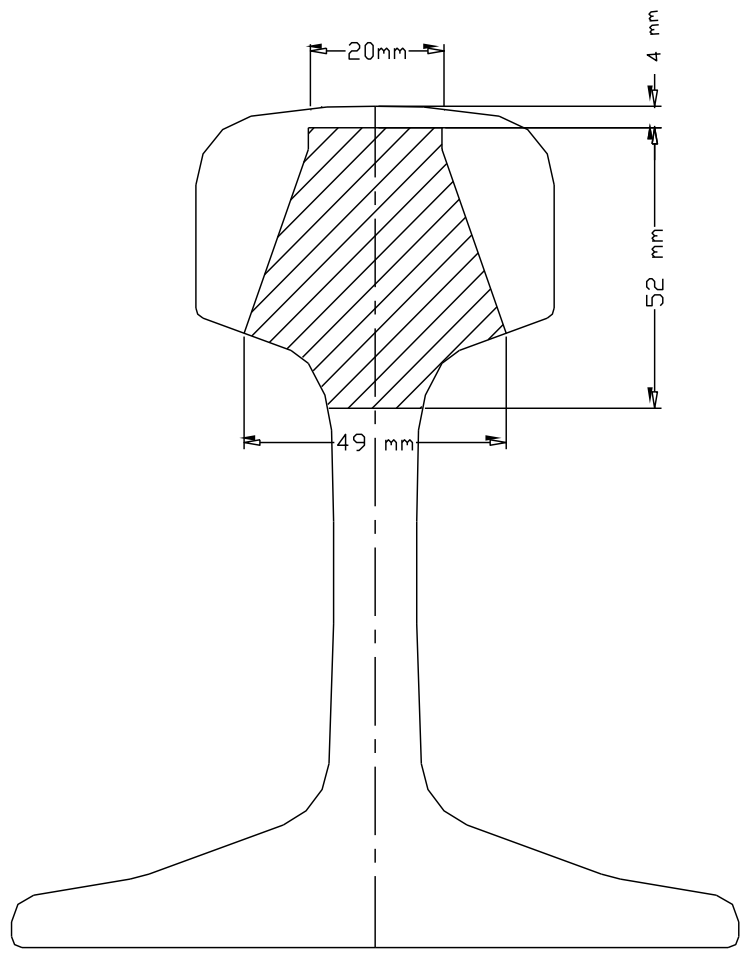

FIG. 2B: AREA COVERED BY 70° PROBE

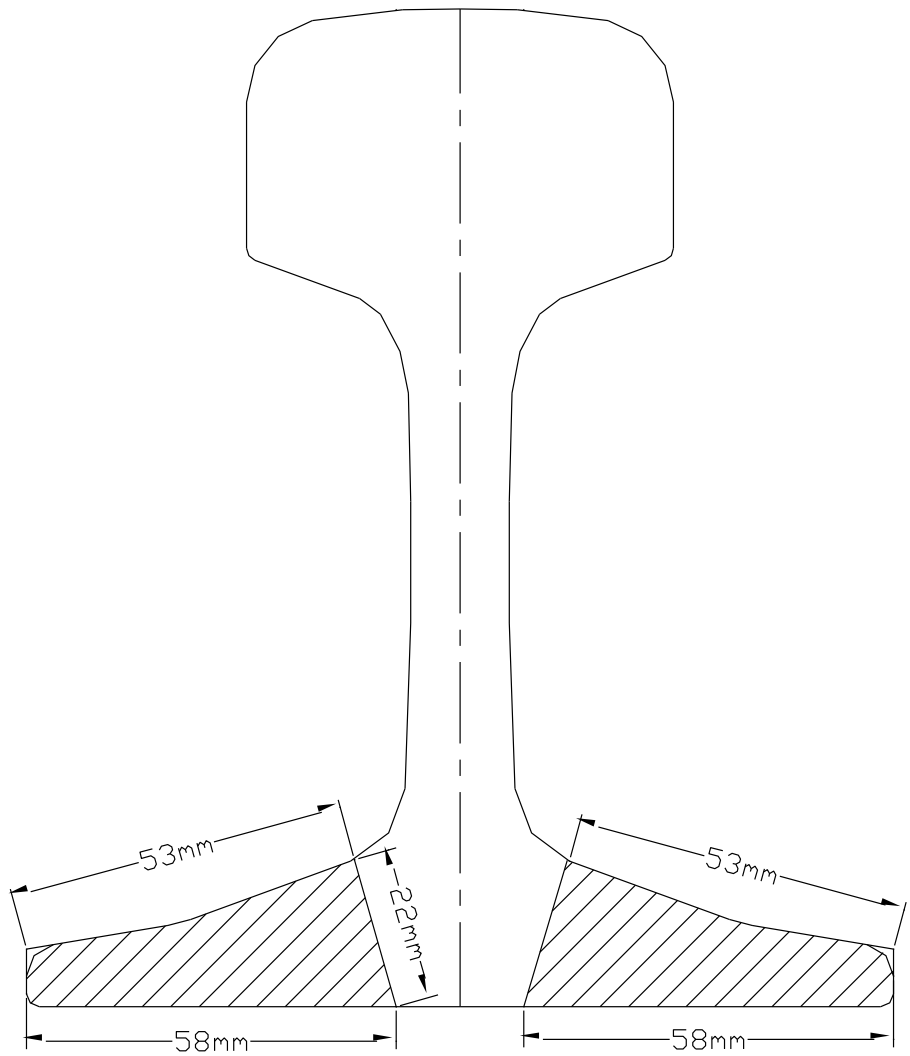

FIG.2C: AREA COVERED BY 70°, 2 MHz, (20mm CIRCULAR OR 20mm X 20mm SQUARE CRYSTAL) PROBE.

(TESTING FOR A.T. WELD FLANGE)

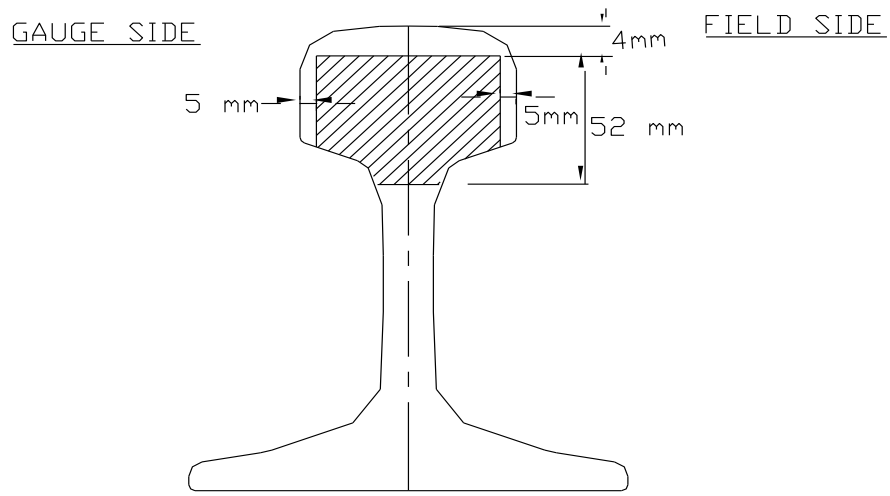

AREA COVERED BY 70° PROBES IN EQUIPMENT
WITH GAUGE FACE CORNER, CENTRE AND
FIELD CORNER PROBES

FIG. 2D: AREA COVERED BY 70° PROBES IN VARIOUS GAUGE FACE CORNER DEFECT DETECTION EQUIPMENT

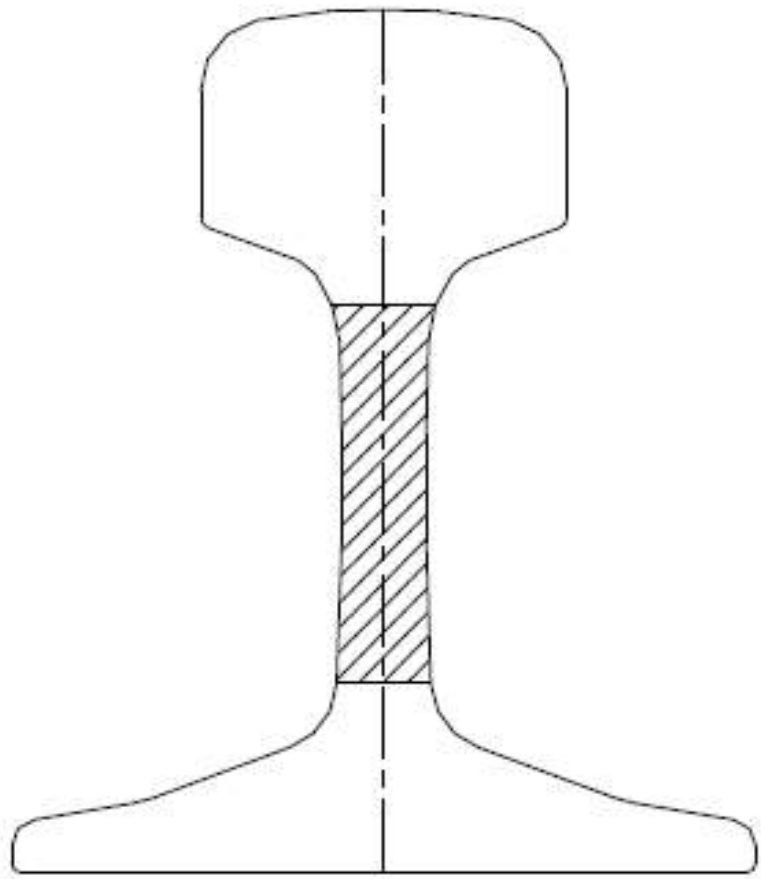

FIG. 2E : AREA COVERED BY 37° PROBE
(FOR BOLT HOLE CRACKS)

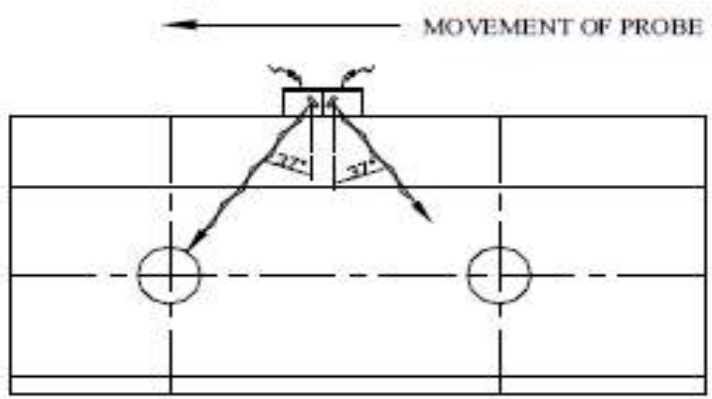

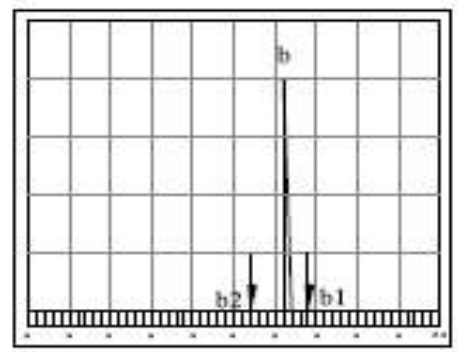

b - BOLT HOLE ECHO AT MAXIMUM AMPLITUDE
b1 - BOLT ECHO STARTS APPEARING FROM HERE
b2 - BOLT HOLE ECHO VANISHES HERE.

FIG.2F: BOLT HOLE WITHOUT CRACK (37° PROBE)

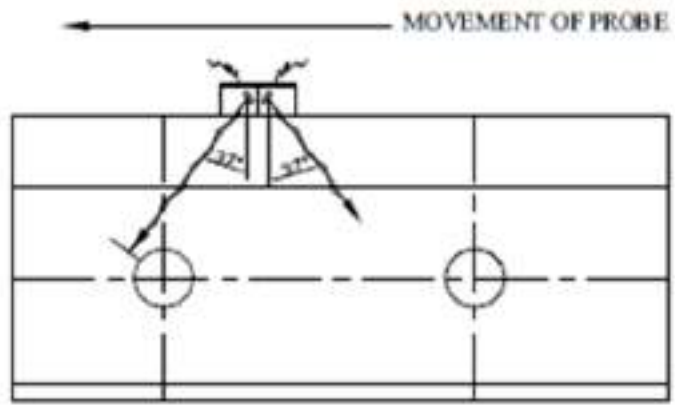

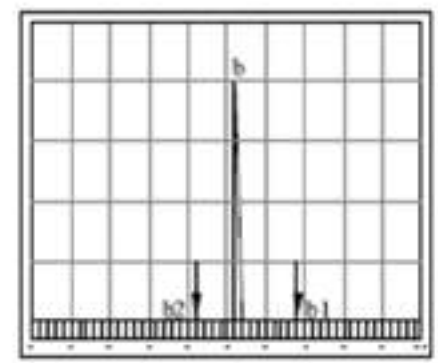

b - FLAW ECHO AT MAXIMUM AMPLITUDE
b1 - FLAW ECHO STARTS APPEARING FROM HERE
b2 - FLAW ECHO VANISHES HERE.

FIG.2G: BOLT HOLE WITH CRACK IN UPPER HALF
(37° PROBE ,TYPE 135,235)

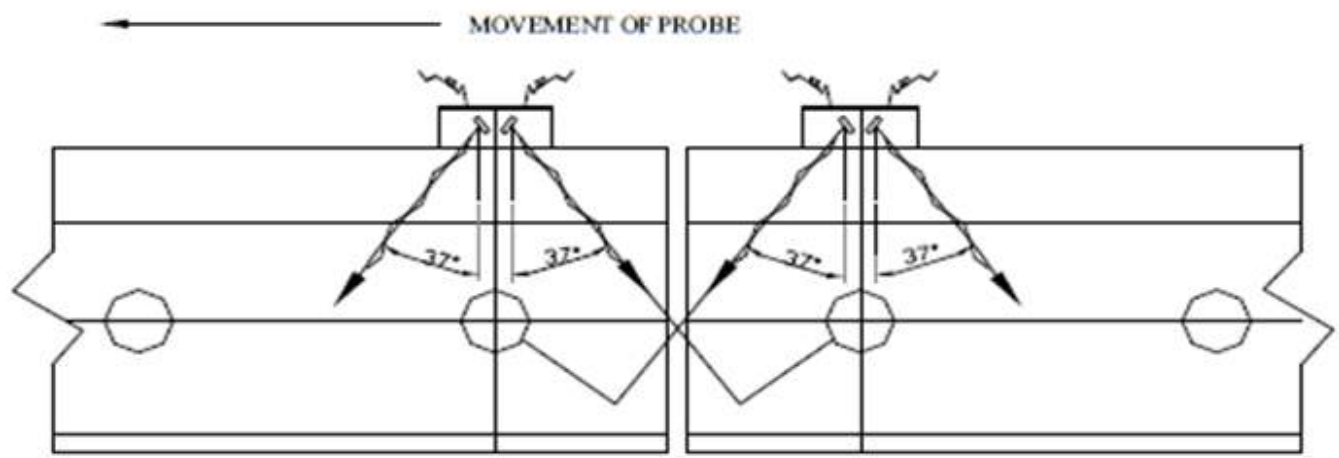

FIG. 2H UNDETECTABLE STAR CRACKS (37^0 PROBE) HAVING RAIL GAP JOINT

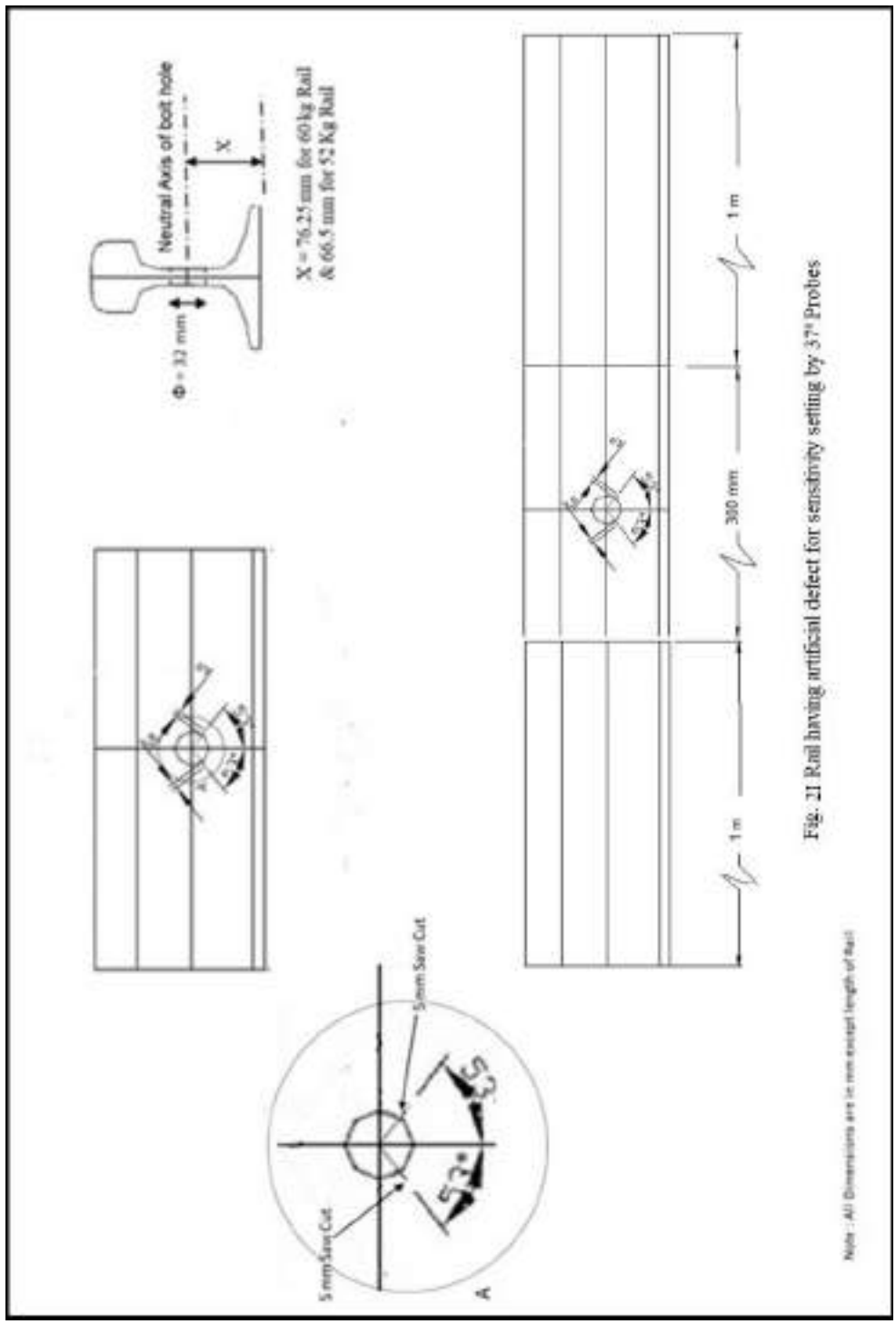

Fig. 21 Rail having artificial defect for sensitivity setting by 37° Probes

Note : All Dimensions are in mm except length of Rail

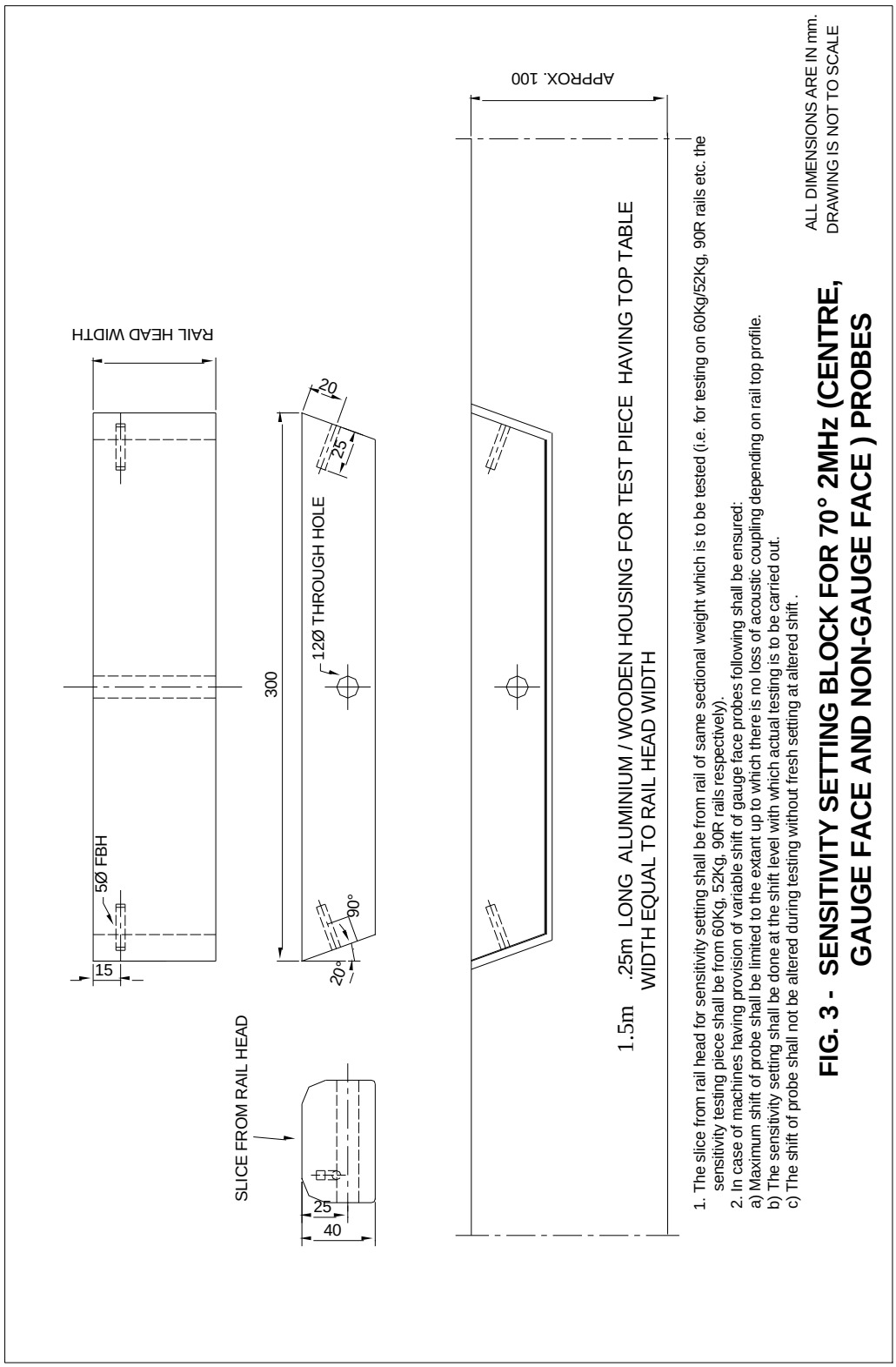
RAIL HEAD WIDTH
5Ø FBH
15
300
12Ø THROUGH HOLE
20
25
90°
20°
SLICE FROM RAIL HEAD
25
40
APPROX. 100
1.5m .25m LONG ALUMINIUM / WOODEN HOUSING FOR TEST PIECE HAVING TOP TABLE
WIDTH EQUAL TO RAIL HEAD WIDTH
ALL DIMENSIONS ARE IN mm.
DRAWING IS NOT TO SCALE
1. The slice from rail head for sensitivity setting shall be from rail of same sectional weight which is to be tested (i.e. for testing on 60Kg/52Kg, 90R rails etc. the sensitivity testing piece shall be from 60Kg, 52Kg, 90R rails respectively).
2. In case of machines having provision of variable shift of gauge face probes following shall be ensured:
a) Maximum shift of probe shall be limited to the extant up to which there is no loss of acoustic coupling depending on rail top profile.
b) The sensitivity setting shall be done at the shift level with which actual testing is to be carried out.
c) The shift of probe shall not be altered during testing without fresh setting at altered shift.
FIG. 3 - SENSITIVITY SETTING BLOCK FOR 70° 2MHz (CENTRE, GAUGE FACE AND NON-GAUGE FACE) PROBES

Fig. 3

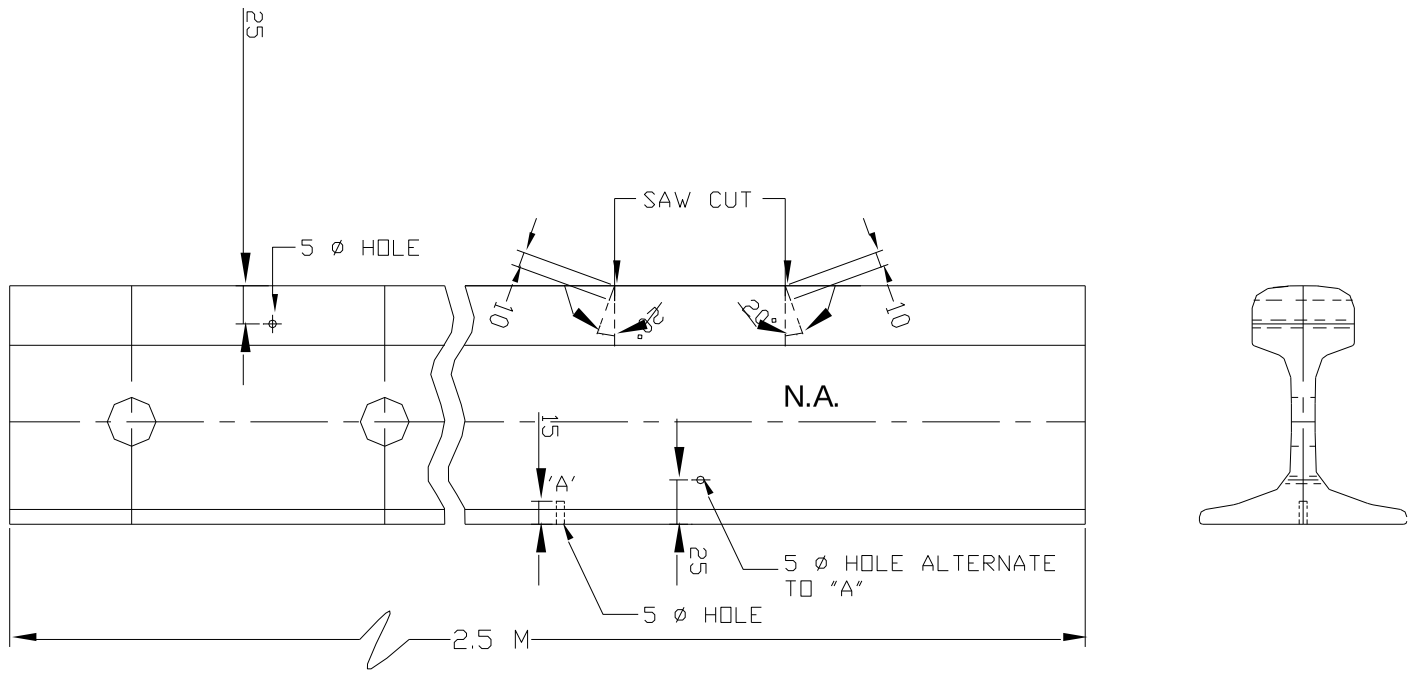

FIG.4: STANDARD RAIL WITH ARTIFICIAL FLAWS FOR CHECKING OF PERFORMANCE OF RAIL TESTERS

NOTE:- ALL DIMENSIONS ARE IN MILLIMETERS.

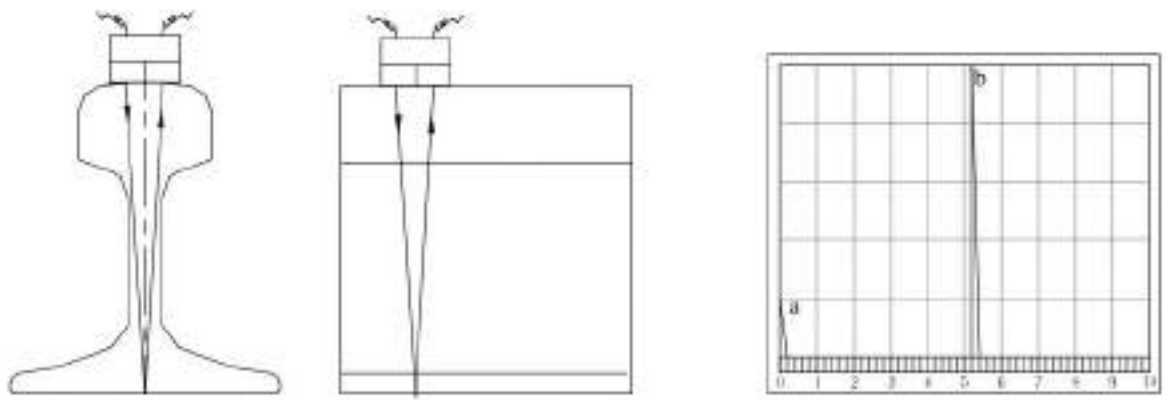

a - SURFACE ECHO.
b - BACK ECHO.

FIG.5: RAIL WITHOUT FLAW (0° PROBE)

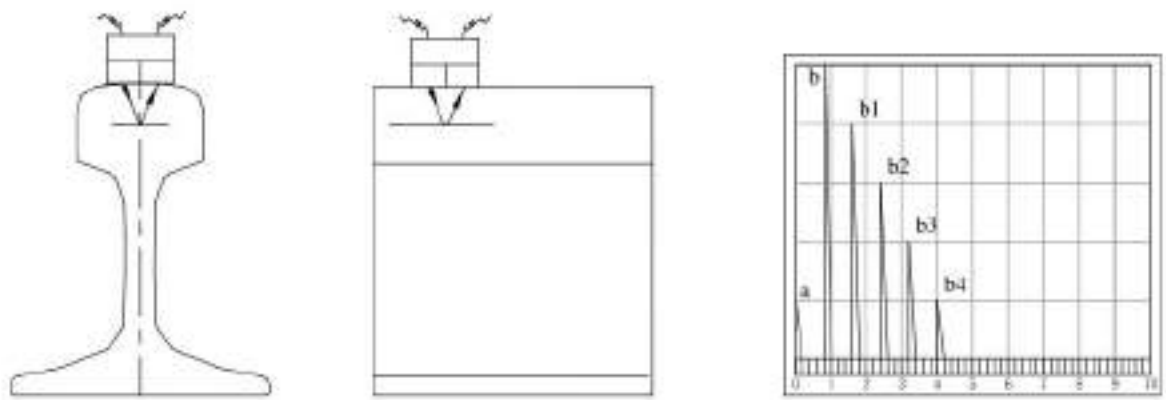

a - SURFACE ECHO.
b - FLAW ECHO.
b1,b2 . . . MULTIPLE FLAW ECHOES

FIG.6: LONGITUDINAL HORIZONTAL SPLIT IN HEAD REGION
(TYPE 112 &212, 0° PROBE)

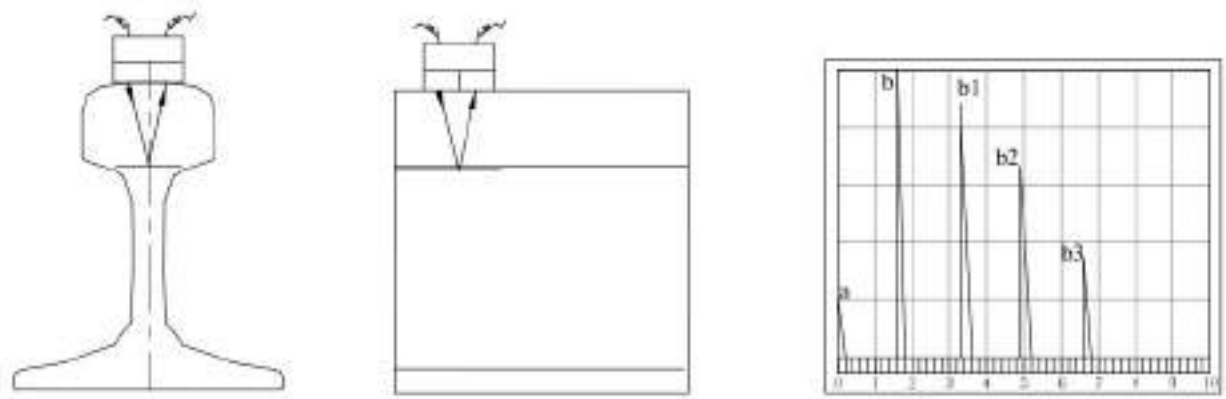

a - SURFACE ECHO.
b - FLAW ECHO.
b1,b2. . . . MULTIPLE FLAW ECHOES

FIG. 7 LONGITUDINAL HORIZONTAL SPLIT IN HEAD-WEB JUNCTION (TYPE 1321-2321,0° PROBE)

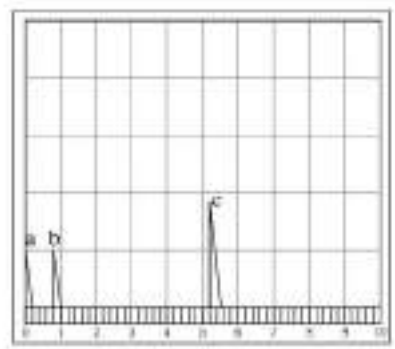

a - SURFACE ECHO.
b - FLAW ECHO.
c - SUPPRESSED BACK ECHO

FIG.8: VERTICAL LONGITUDINAL SPLIT IN HEAD (TYPE 113 & 213, 0° PROBE)

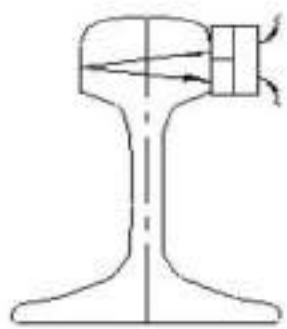

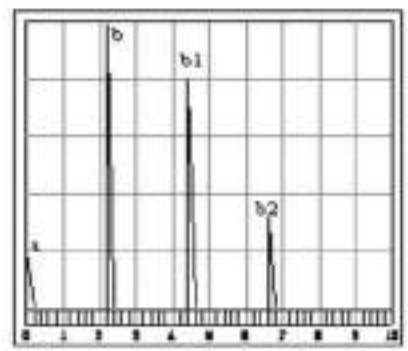

a - SURFACE ECHO
b - BACK ECHO
b1,b2 . . . MULTIPLE BACK ECHOES

FIG.9 : SIDE PROBING OF RAIL HEAD, WITHOUT FLAW

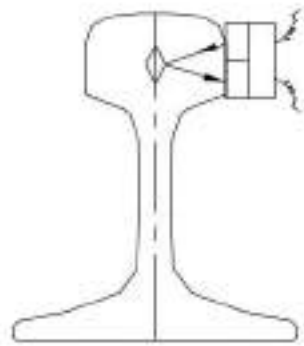

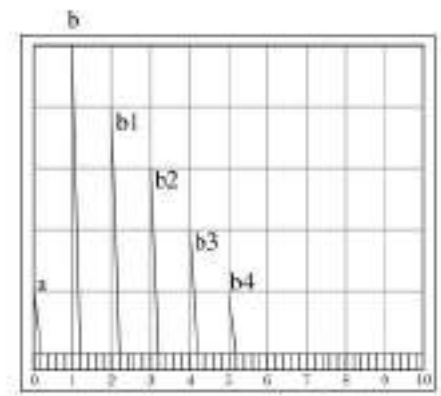

a - SURFACE ECHO
b - FLAW ECHO
b1,b2. . . . MULTIPLE FLAW ECHOES

FIG. 10 : VERTICAL LONGITUDINAL SPLIT IN HEAD (0° SIDE PROBING)

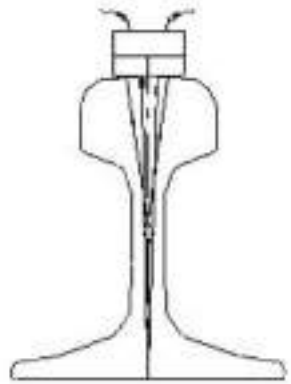

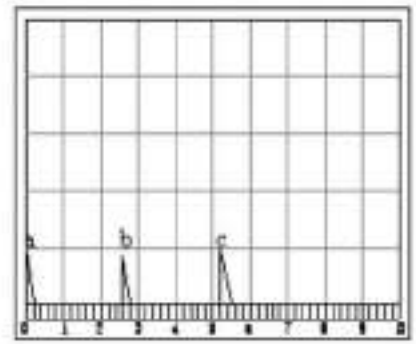

a - SURFACE ECHO
b - FLAW ECHO
c - SUPPRESSED BACK ECHO

FIG. 11 : VERTICAL LONGITUDINAL SPLIT IN WEB
(TYPE 133 & 233 - 0° PROBE)

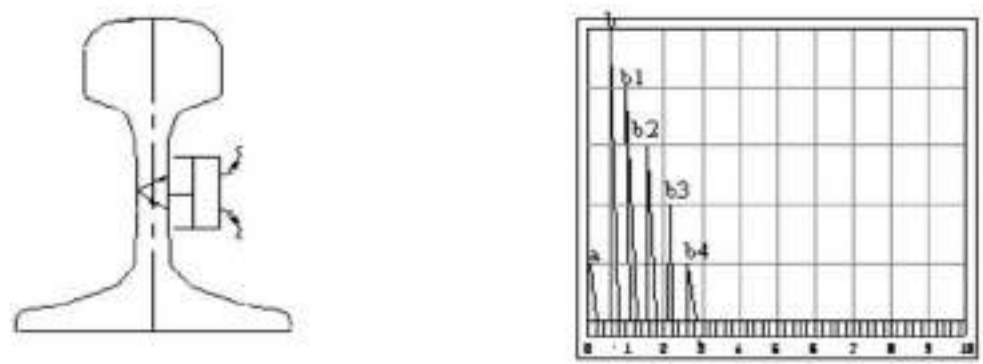

a - SURFACE ECHO
b - BACK ECHO
b1,b2 . . . . MULTIPLE BACK ECHOES

FIG. 12 : SIDE PROBING OF RAIL WEB WITHOUT DEFECT

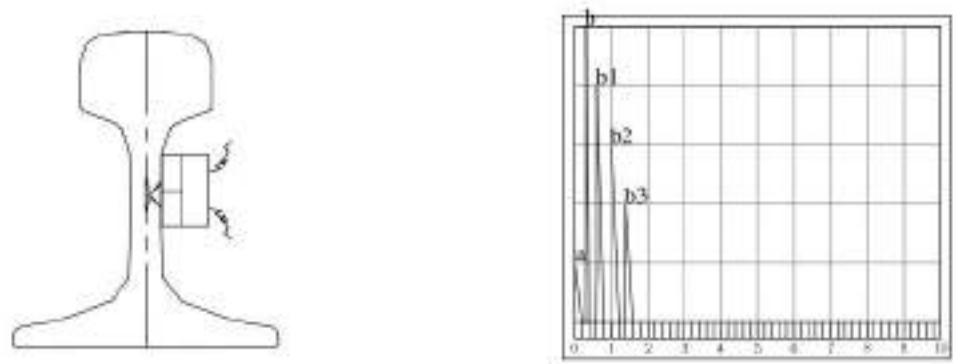

a - SURFACE ECHO
b - FLAW ECHO
b1,b2 . . . . MULTIPLE FLAW ECHOES

FIG. 13 : VERTICAL LONGITUDINAL SPLIT IN WEB (0°SIDE PROBING)

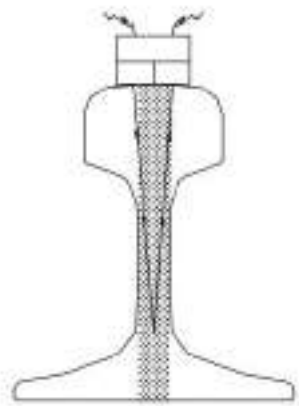

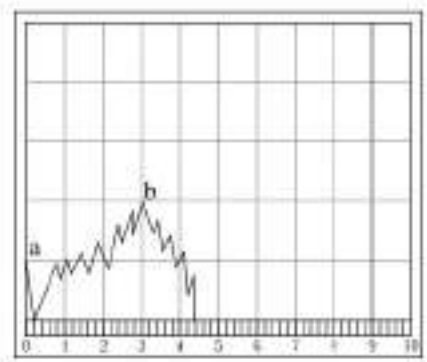

a - SURFACE ECHO
b - FLAW ECHO (GRASSY PEAK PATTERN)

FIG. 14 : SEGREGATION (0° PROBE)

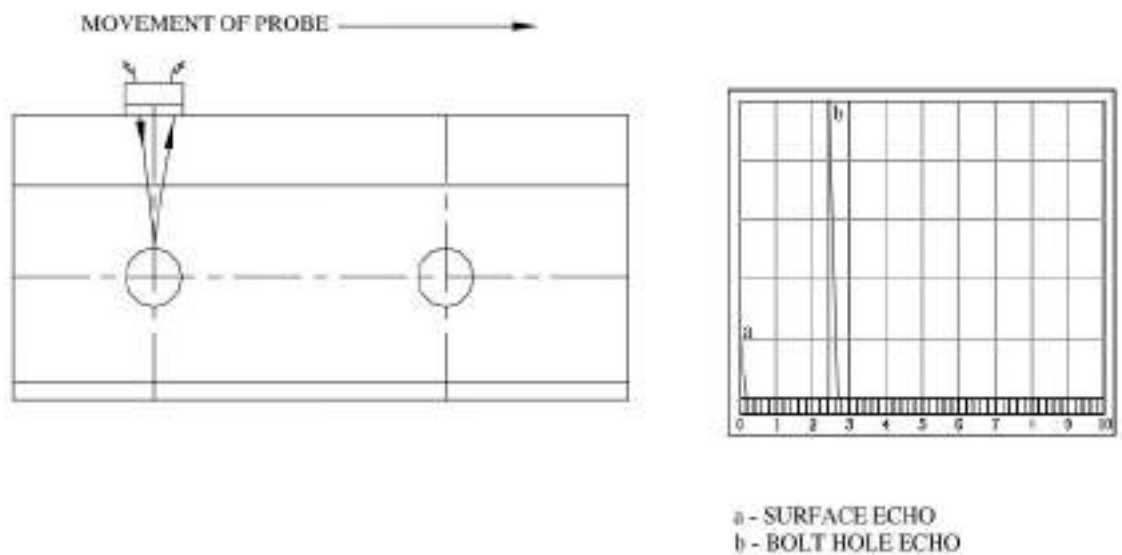

FIG. 15 : BOLT HOLE WITHOUT CRACK (0° PROBE)

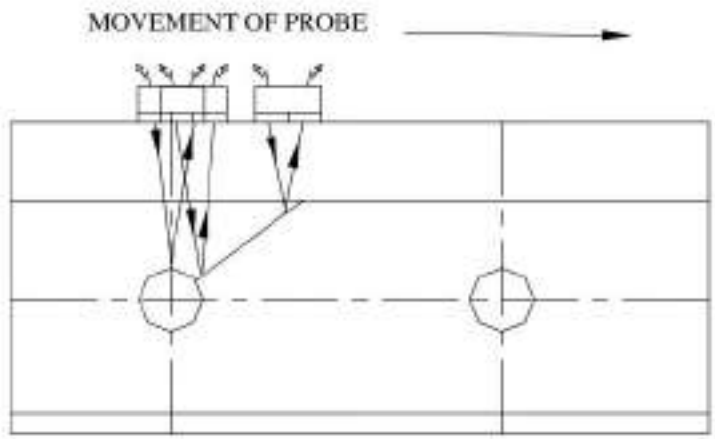

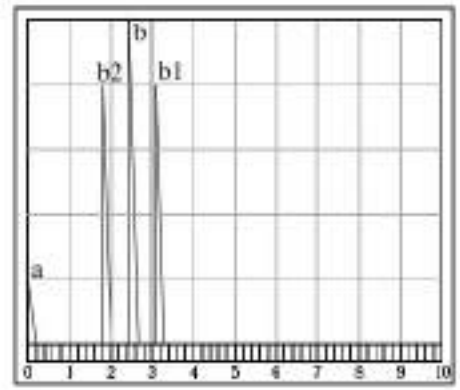

a - SURFACE ECHO
b - BOLT HOLE ECHO
b1& b2 - SHIFTING FLAW ECHOES

FIG. 16: BOLT HOLE WITH CRACK (TYPE 135,235,0° PROBE)

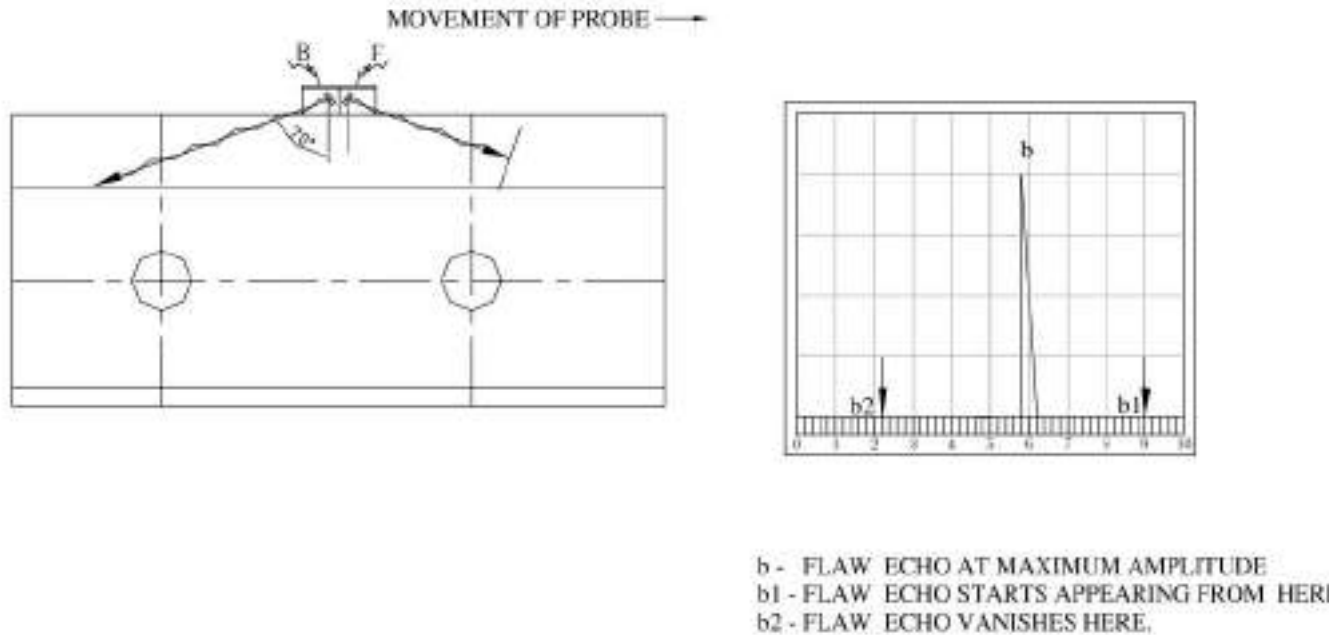

b - FLAW ECHO AT MAXIMUM AMPLITUDE
b1 - FLAW ECHO STARTS APPEARING FROM HERE
b2 - FLAW ECHO VANISHES HERE.

FIG.17: TRANSVERSE DEFECT (TYPE 111, 211
70°,2 MHz, FORWARD PROBE)

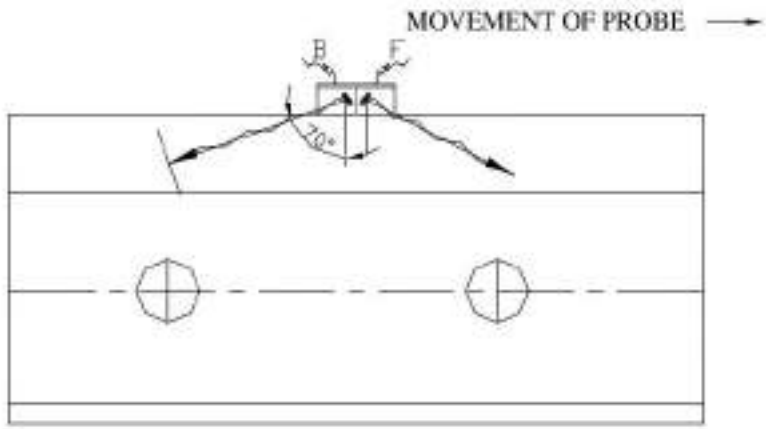

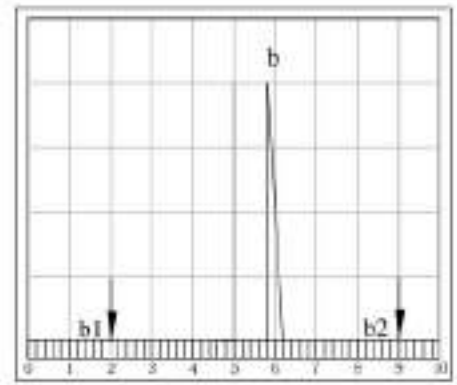

b - FLAW ECHO AT MAXIMUM AMPLITUDE
b1 - FLAW ECHO STARTS APPEARING FROM HERE
b2 - FLAW ECHO VANISHES HERE.

FIG.18: TRANSVERSE DEFECT BY (TYPE 111, 211
70°,2 MHz, BACKWARD PROBE)

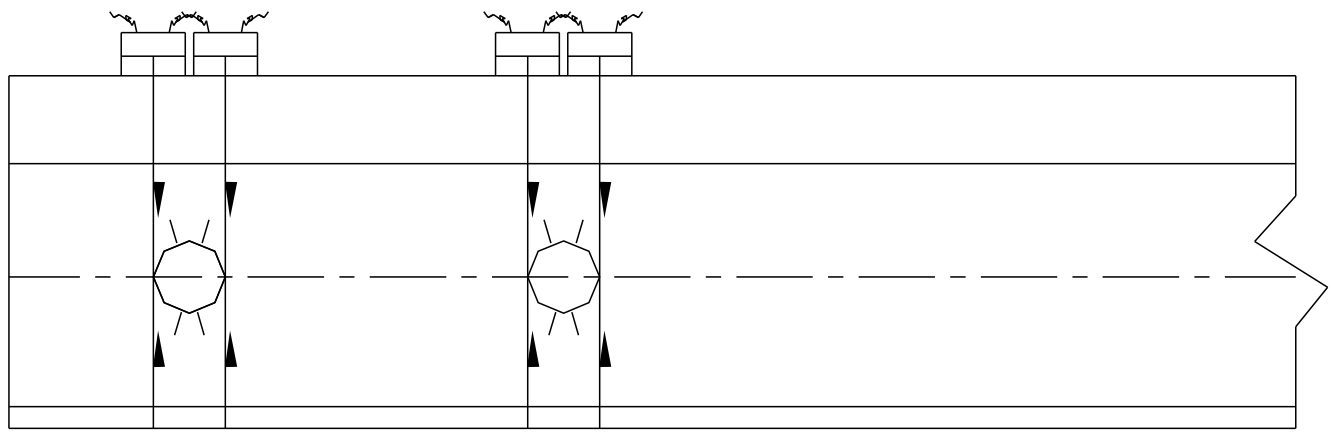

FIG. 19 : UNDETECTABLE STAR CRACKS (0° PROBE)

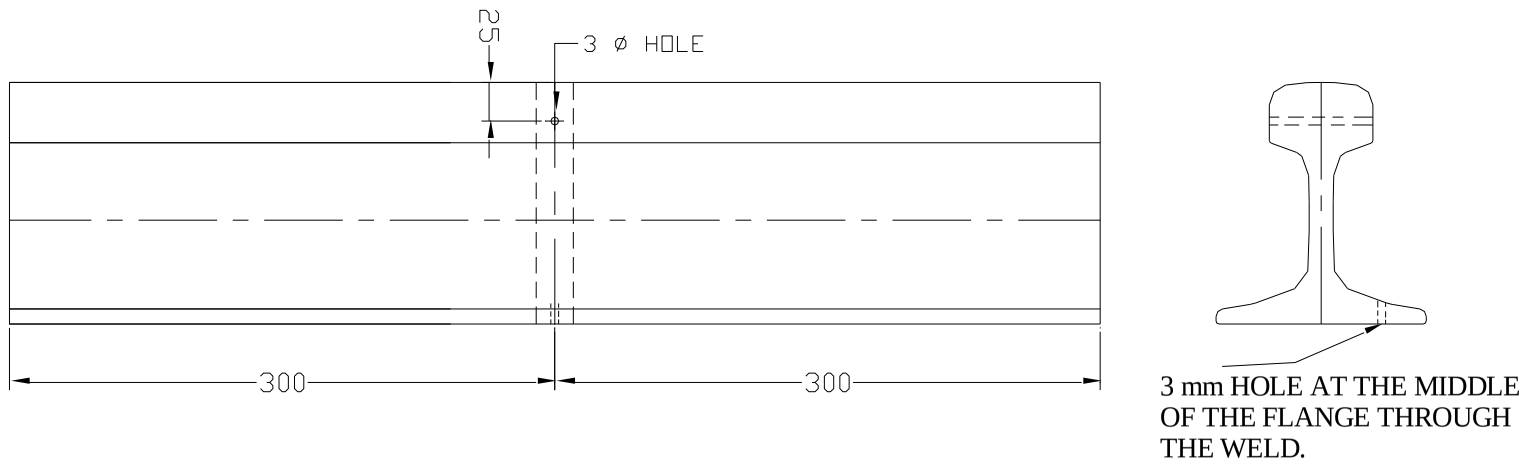

FIG. 20(a) : STANDARD A.T. WELDED RAIL PIECE WITH ARTIFICIAL FLAWS FOR SENSITIVITY SETTING OF ULTRASONIC EQUIPMENT TO EXAMINE A.T. WELDS

NOTE:- ALL DIMENSIONS ARE IN MILLIMETERS.

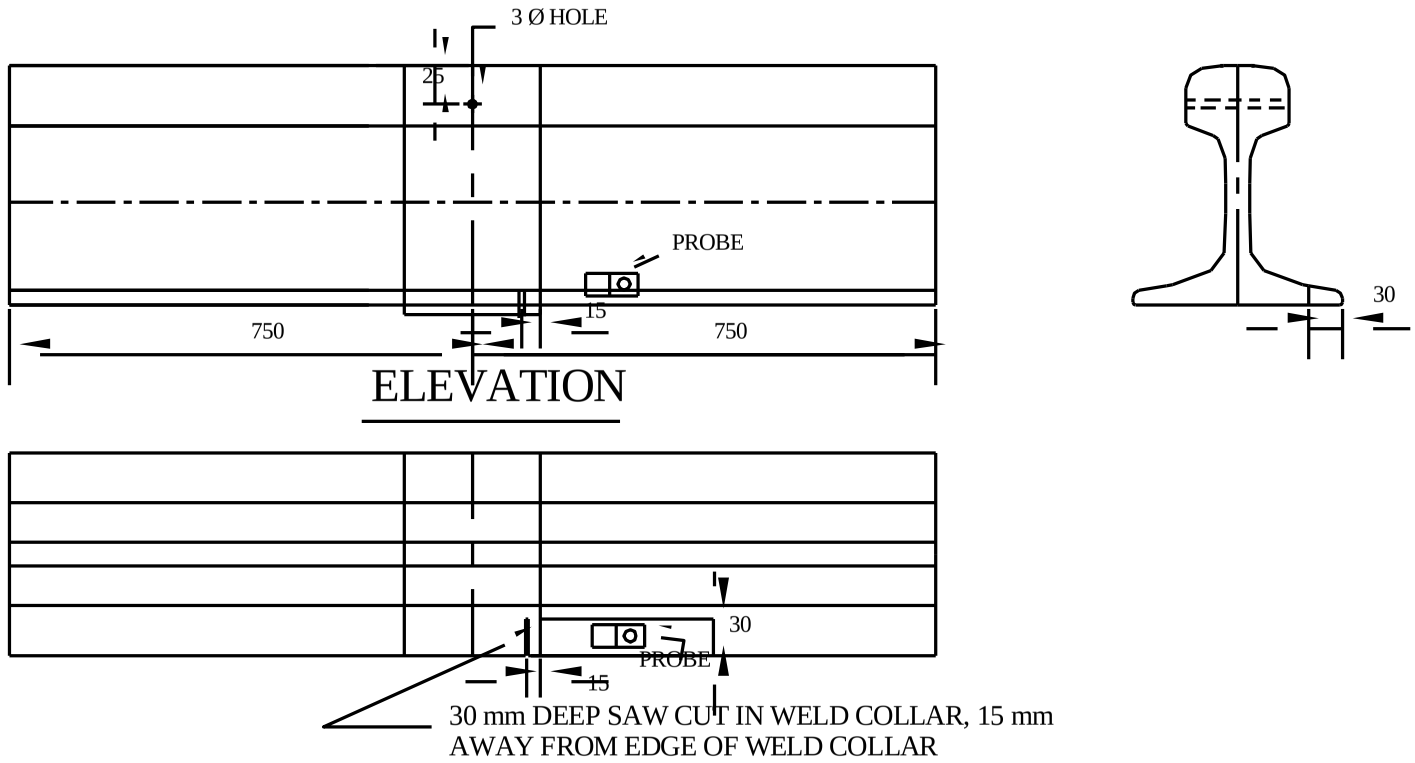

FIG. 20(b): STANDARD A.T. WELDED RAIL PIECE WITH ARTIFICIAL FLAWS FOR SENSITIVITY SETTING OF ULTRASONIC EQUIPMENT TO EXAMINE 75 MM WIDE GAP A.T. WELDS

NOTE:- ALL DIMENSIONS ARE IN MILLIMETERS.

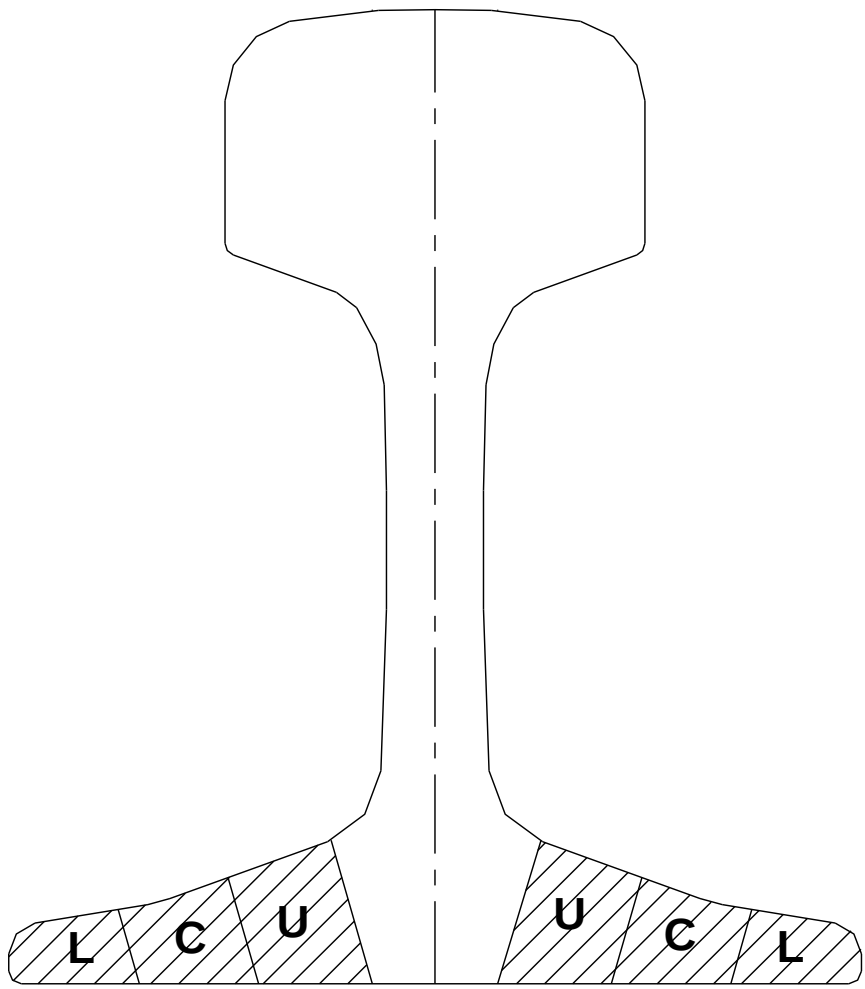

FIG.21(a): SKETCH SHOWING THE LOCATION OF FLANGE OF RAIL FOR ULTRASONIC TESTING WITH 70°, 2 MHz , (20mm CIRCULAR OR 20mm X 20mm SQUARE CRYSTAL) ANGLE PROBE

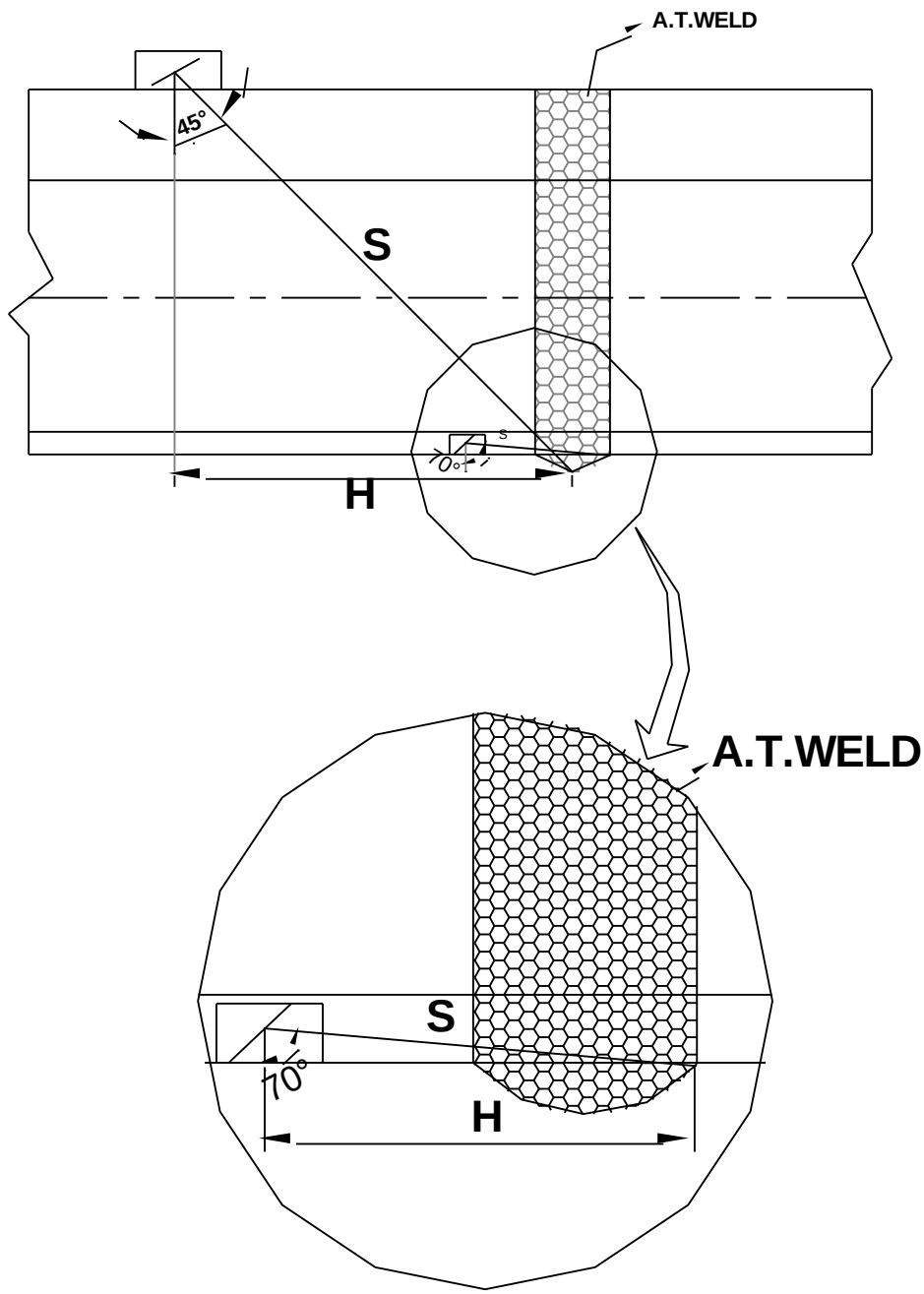

FIG. 21(b): TESTING OF BOTTOM FLANGE OF A.T. WELDS USING 70° AND 45° PROBES

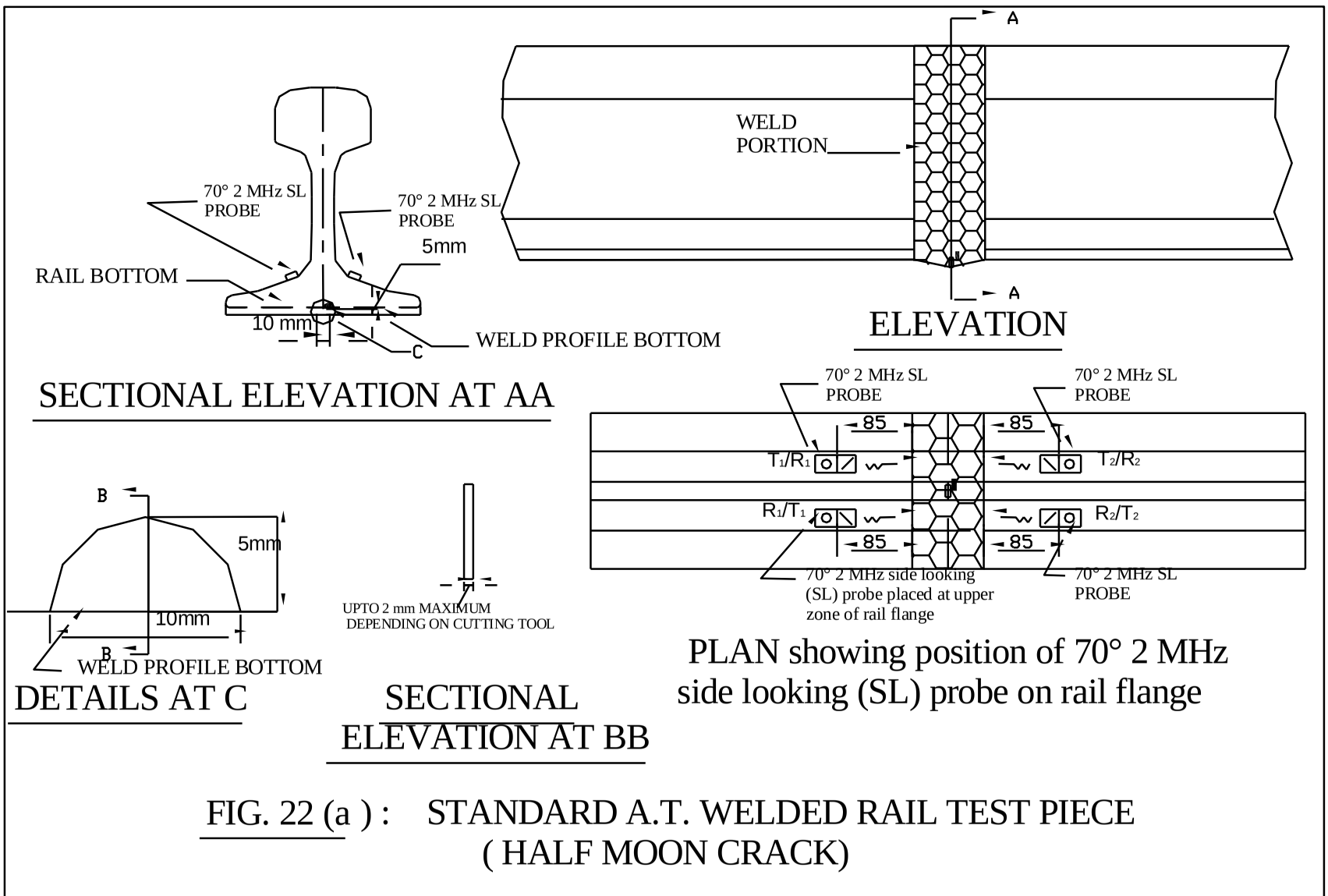

FIG. 22 (a) : STANDARD A.T. WELDED RAIL TEST PIECE (HALF MOON CRACK)

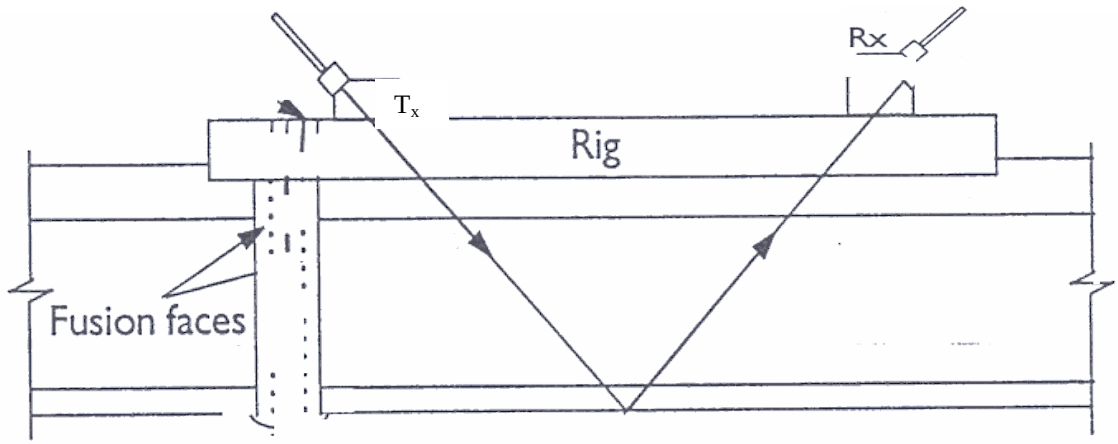

Fig.22(b): Sensitivity setting using 45^{0-}tandem probe

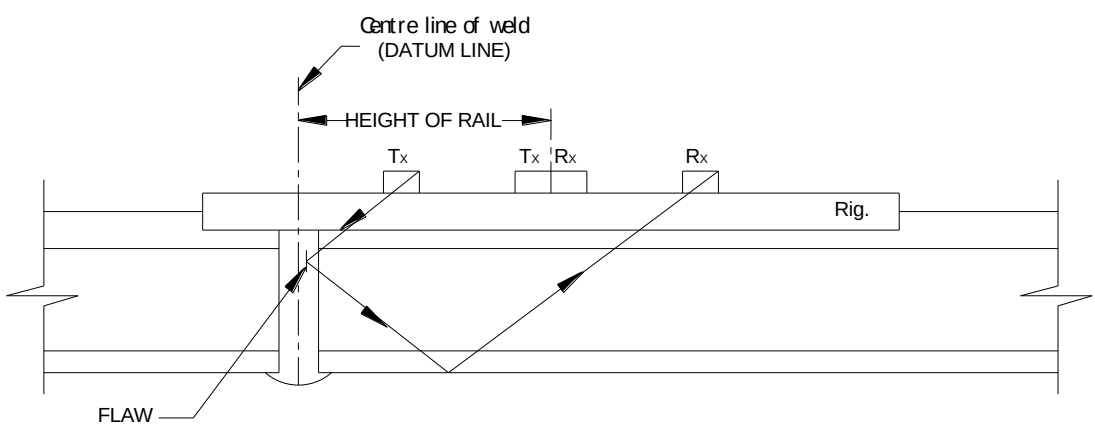

Fig. 22 (c): AT Weld Testing using 45° tandem probe

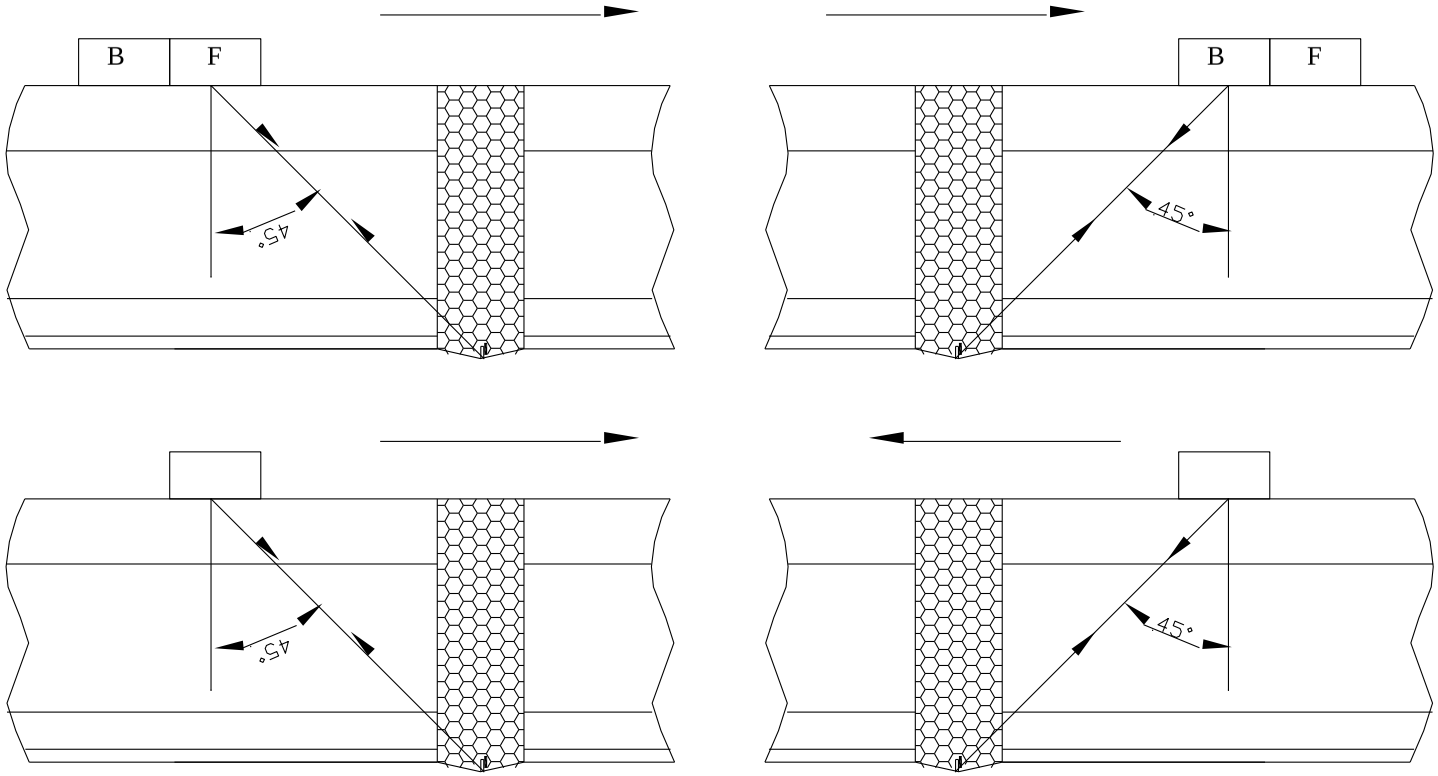

FIG. 23: PROBE POSITIONS FOR TESTING OF HALF MOON CRACK WITH 45° PROBE

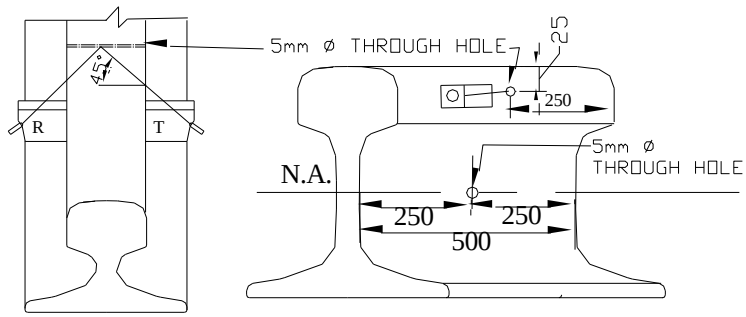

CALIBRATION AND SENSITIVITY SETTING (USING 45° PROBE) ON STANDARD RAIL PIECE

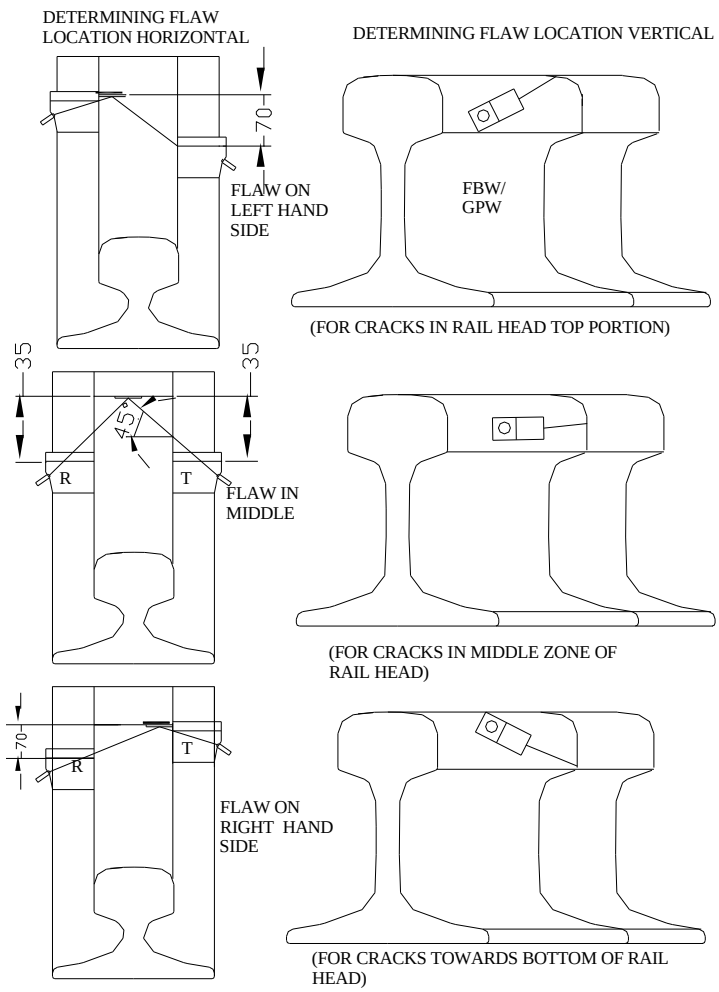

FIG.24 (a): POSITION OF 45° ANGLE PROBES AND BEAM PATH FOR VARIOUS FLAW LOCATIONS WHEN EXAMINING THE HEAD OF G.P. & F.B. WELDS

NOTE:- ALL DIMENSIONS ARE IN MILLIMETERS. TEST RANGE 165mmSW

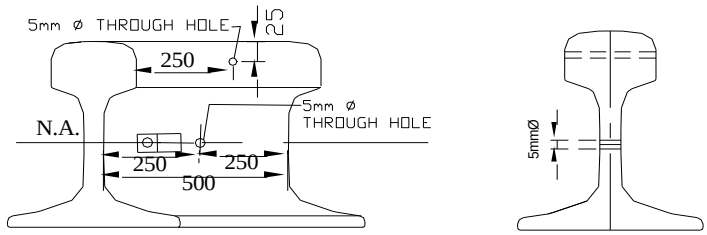

CALIBRATION AND SENSITIVITY SETTING (USING 70° PROBE)
ON STANDARD RAIL PIECE

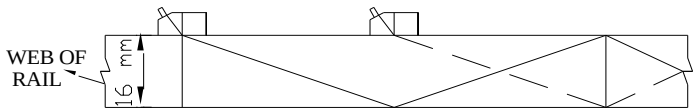

WELD : FREE FROM FLAWS, NO FLAW SIGNAL

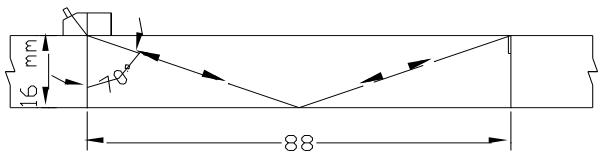

FLAW AT TOP (PROBE SIDE):FLAW ECHO AT GRADUATION MARK 5.6

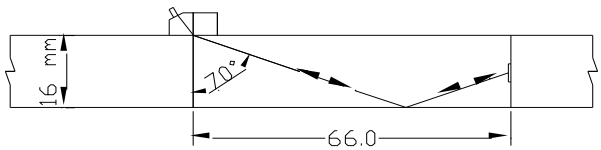

FLAW IN MIDDLE: FLAW ECHO AT GRADUATION MARK 4.2

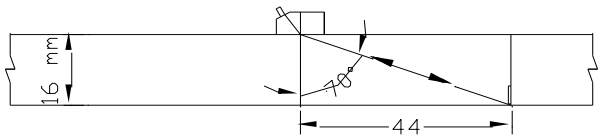

FLAW AT BOTTOM (OPPOSITE SIDE TO PROBE);FLAW ECHO
AT GRADUATION MARK 2.8

FIG.24(b): POSITION OF 70° ANGLE PROBE & BEAM PATH FOR VARIOUS FLAW LOCATION WHEN EXAMINING THE WEB AND FLANGE OF G.P. & F.B. WELDS

NOTE:- ALL DIMENSIONS ARE IN MILLIMETERS. TEST RANGE:165 mm SW

FREEDOM FROM DEFECTS: SUCH DEFCTS INCLUDE (AMONG OTHER DETREMENTAL DEFECTS) CRACK OF ALL KINDS, FLAWS, PIPING OR LACK OF METAL.

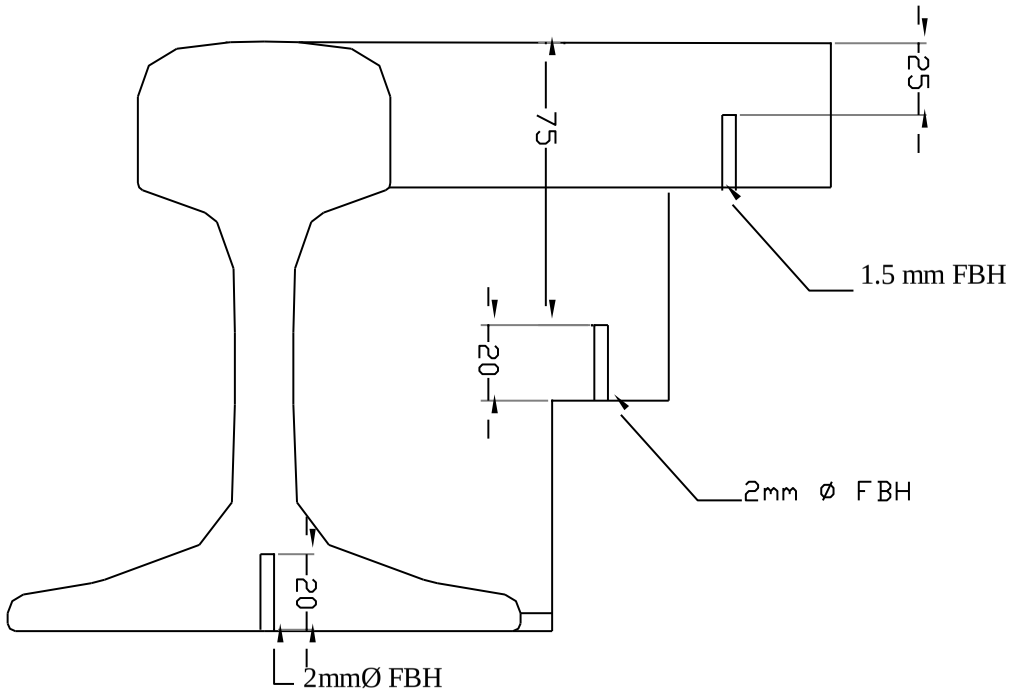

THE LIMIT OF PERMISSIBLE DEFECTS FOR UST OF RAILS SHALL BE AS FOLLOWS:-

HEAD - 1.5 mm Ø FLAT BOTTOM HOLE.
WEB - 2.0 mm Ø FLAT BOTTOM HOLE
FOOT - 2.0 mm Ø FLAT BOTTOM HOLE

REJECTION LEVEL

ANY SIGNAL EITHER FROM HEAD WEB OR FOOT HAVING HEIGHT MORE THAN THE RESPECTIVE SIGNAL HEIGHTS (GAIN SETTING TO 60% OF SCREEN HEIGHT) WILL BE CONSIDERED AS DEFECTIVE.

FIG. 25: STANDARD TEST RAIL PIECE FOR TESTING OF RAILS BEFORE MANUFACTURING OF POINTS & CROSSINGS

PLAN OF POINT RAIL

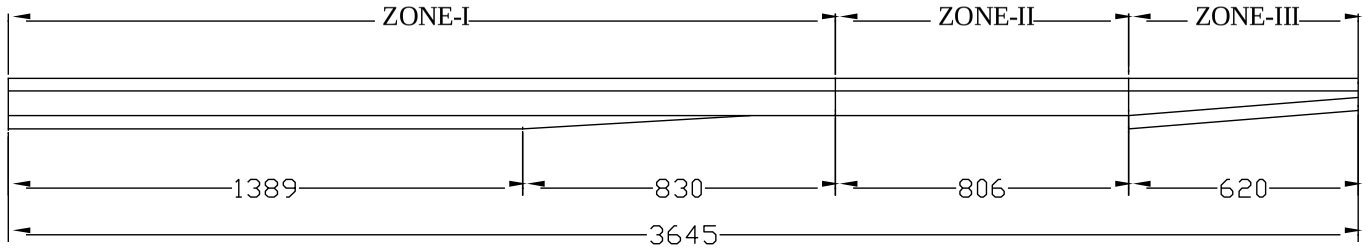

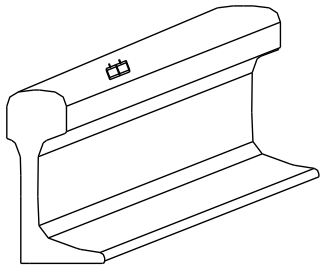

ZONE-I,II PROBE POSITION

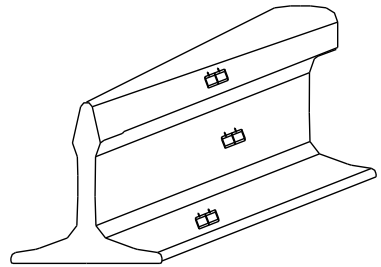

ZONE - III PROBE POSITION

PLAN OF SPLICE RAIL

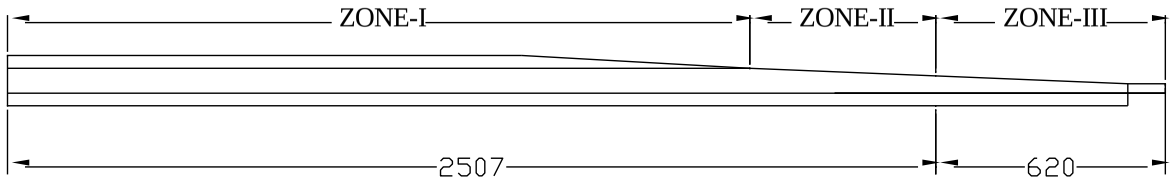

FIG. 26(a): TESTING PROCEDURE FOR POINT AND SPLICE RAILS FOR 1 IN 12 CROSSING B G 52 Kg

NOTE:- ALL DIMENSIONS ARE IN MILLIMETERS.

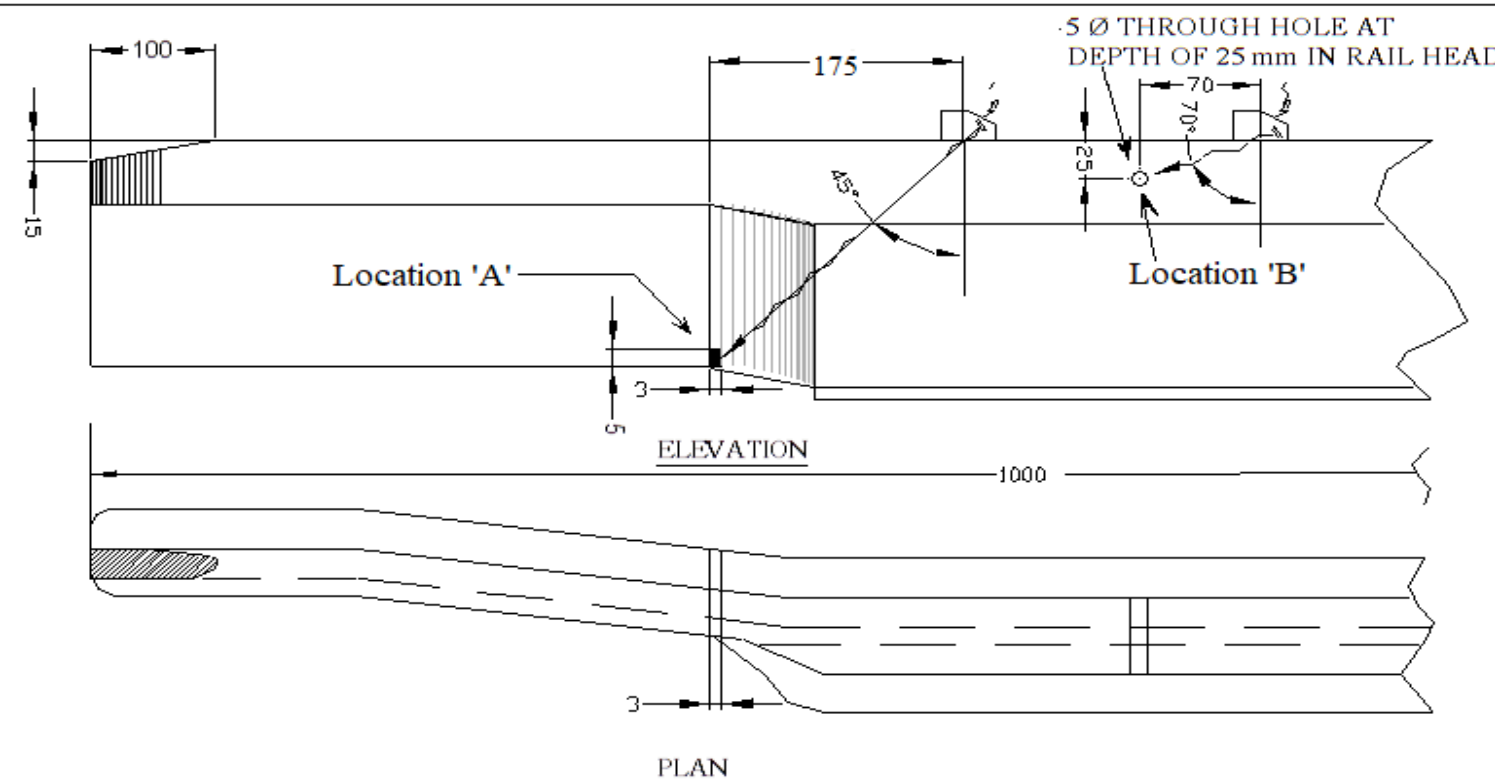

FIG. 26(b) : STANDARD TEST PIECE (SEJ /ISEJ STOCK RAIL) SHOWING BEAM DIRECTION OF ANGLE PROBES FOR SENSITIVITY SETTING FOR 60 KG RAIL SECTION

NOTE:- ALL DIMENSIONS ARE IN MILLIMETERS.

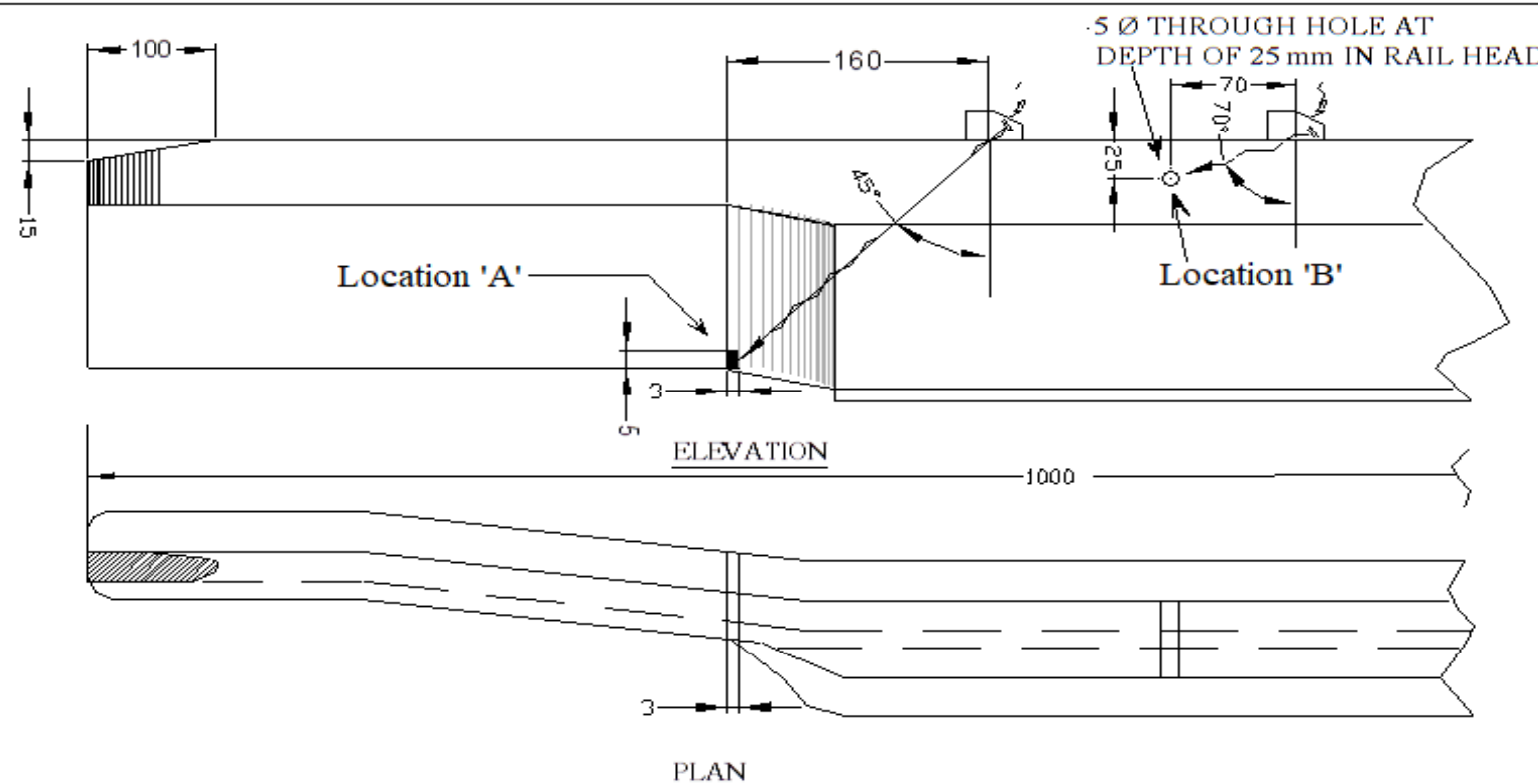

FIG. 26(c) : STANDARD TEST PIECE (SEJ/ISEJ STOCK RAIL) SHOWING BEAM DIRECTION OF ANGLE PROBES FOR SENSITIVITY SETTING FOR 52 KG RAIL SECTION

NOTE:- ALL DIMENSIONS ARE IN MILLIMETERS.

Sl. No.	PROBE ANGLE	BEAM PATH	APPLICATION
1	0° 4MHz DOUBLE CRYSTAL	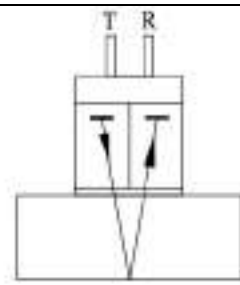	1. LONGITUDINAL HORIZONTAL DEFECTS IN HEAD WEB AND FOOT 2.STAR CRACK IN WEB (BOLT HOLE)
2	70° FORWARD(F) AND BACK WARD(B) 2MHz SINGLE CRYSTAL	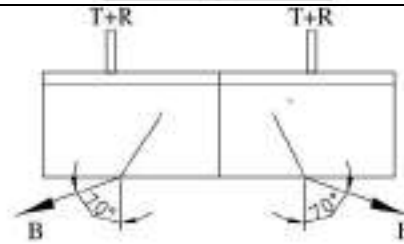	1. TRANSVERSE DEFECTS IN RAIL HEAD
3	45° 2MHz SINGLE CRYSTAL	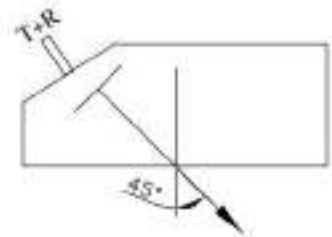	1. TRANSVERSE DEFECTS IN HEAD PORTIONS OF F.B. AND G.P.WELDED JOINT 2. HALF MOON DEFECTS IN A.T.WELDS BELOW WEB-FOOT JUNCTION
4	70° 2 MHz, (20mm CIRCULAR OR 20mm X 20mm SQUARE CRYSTAL) SINGLE CRYSTAL	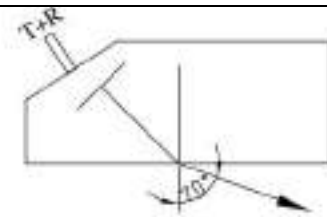	1. DEFECTS OF A.T.WELDED JOINTS IN FLANGE LOCATION
5	70° 2 MHz SIDE LOOKING PROBE (SLP)	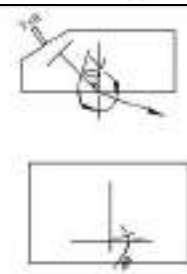	1. HALF MOON DEFECTS IN A.T.WELDED JOINTS IN FLANGE LOCATION BELOW WEB-FOOT JUNCTION
6	37° FORWARD(F) AND BACK WARD(B) 2MHz SINGLE CRYSTAL	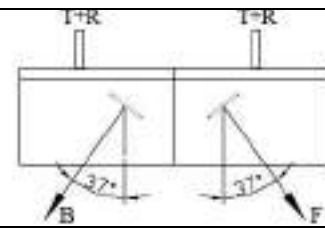	1. STAR CRACK IN WEB (BOLT HOLE)

FIG. 27: DETAIL OF PROBES USED FOR TESTING OF RAIL AND WELDS

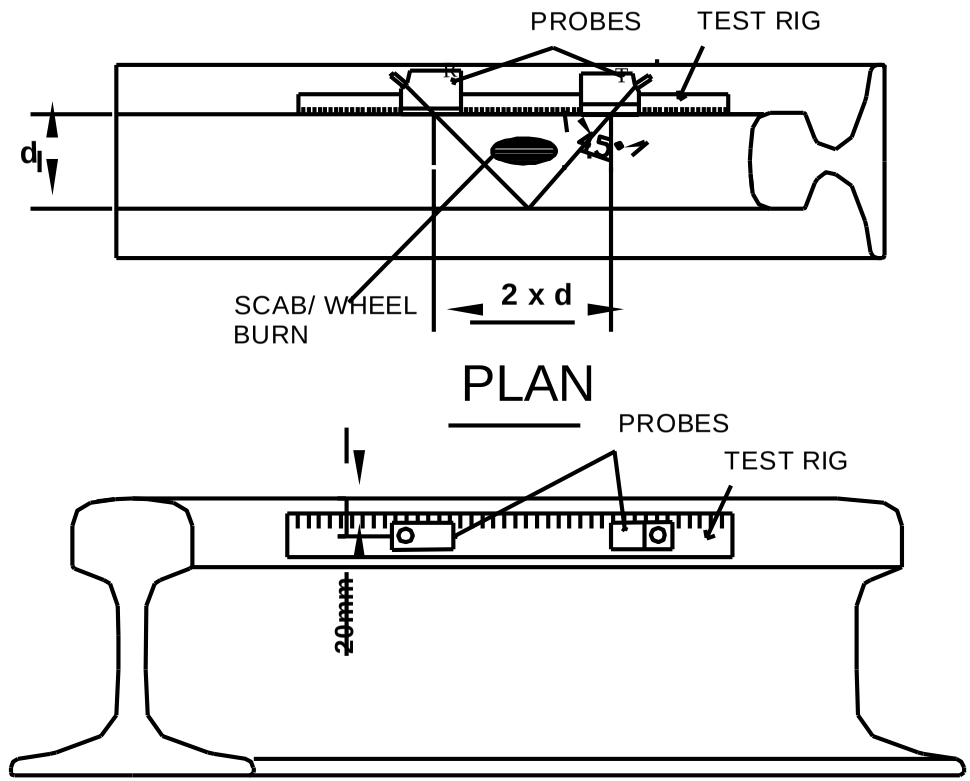

FIG. 28 : Sensitivity setting/Testing with 45° probe using Test Rig (for locations having scabs/wheel burns)

FIG.29 SENSITIVITY SETTING BLOCK & ULTRASONIC SCANING OF TONGUE RAIL OF SEJ. (RAIL IN PLAN)

----------Deleted----------

FIG.30: Typical signal pattern of bunch of moving signals for AT welds

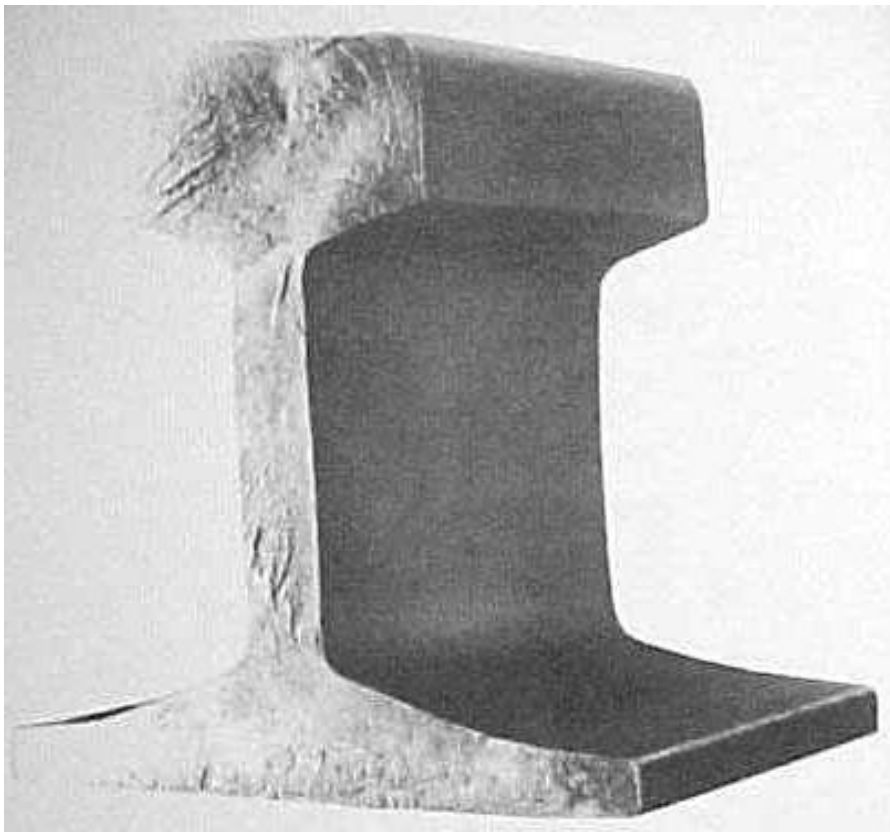

FIG. 31 : 100 OR 200 - TRANSVERSE BREAKAGE WITHOUT APPARENT ORIGIN

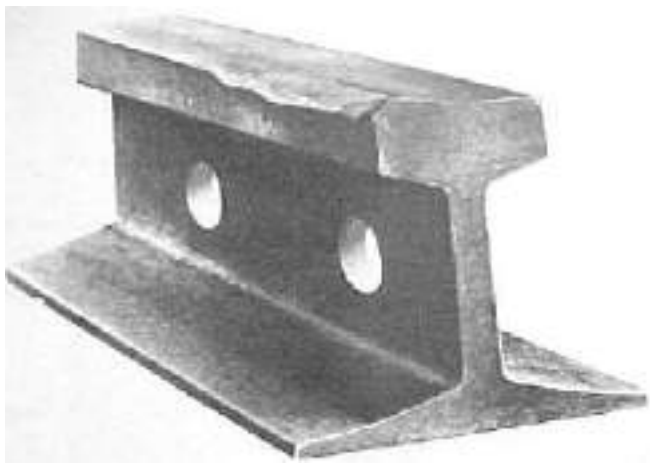

FIG. 32 : 123 OR 223 - HEAD, SURFACE CRUSHING OR BATTERING

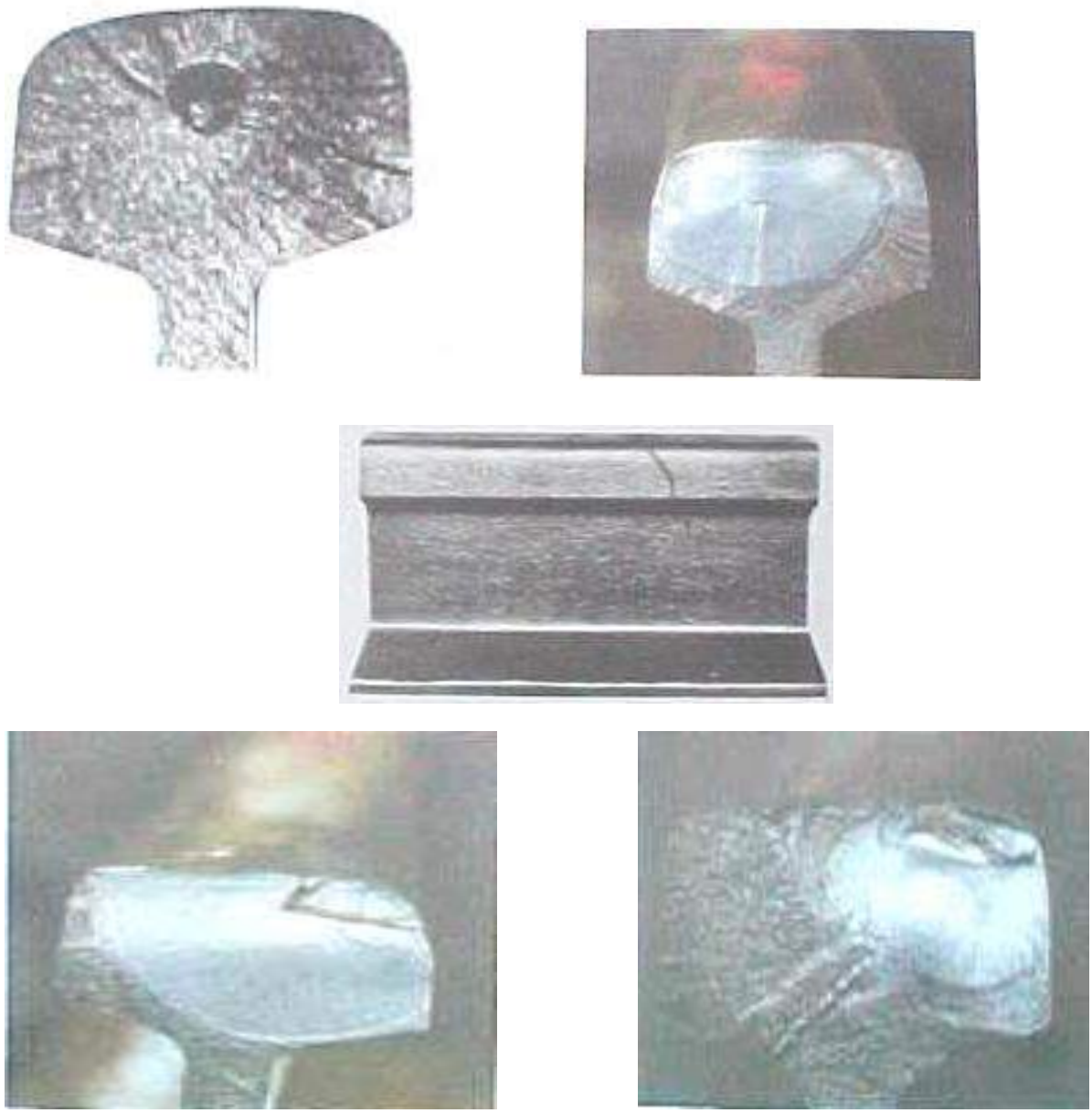

FIG. 33 : 111 OR 211 - INTERNAL FLAW IN HEAD , TRANSVERSE BREAKAGE

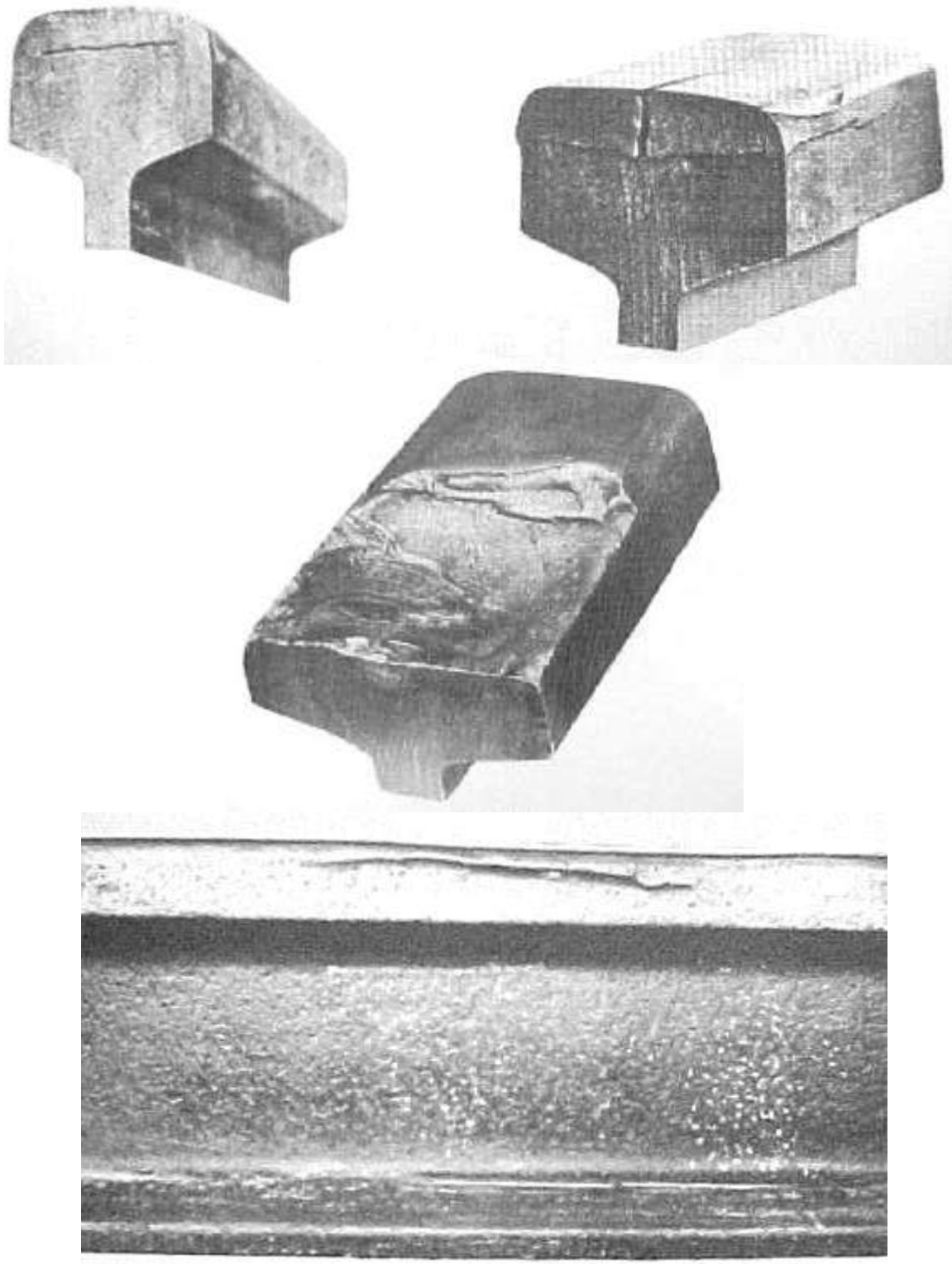

FIG. 34 : 112 OR 212 - INTERNAL FLAW IN HEAD , HORIZONTAL CRACK

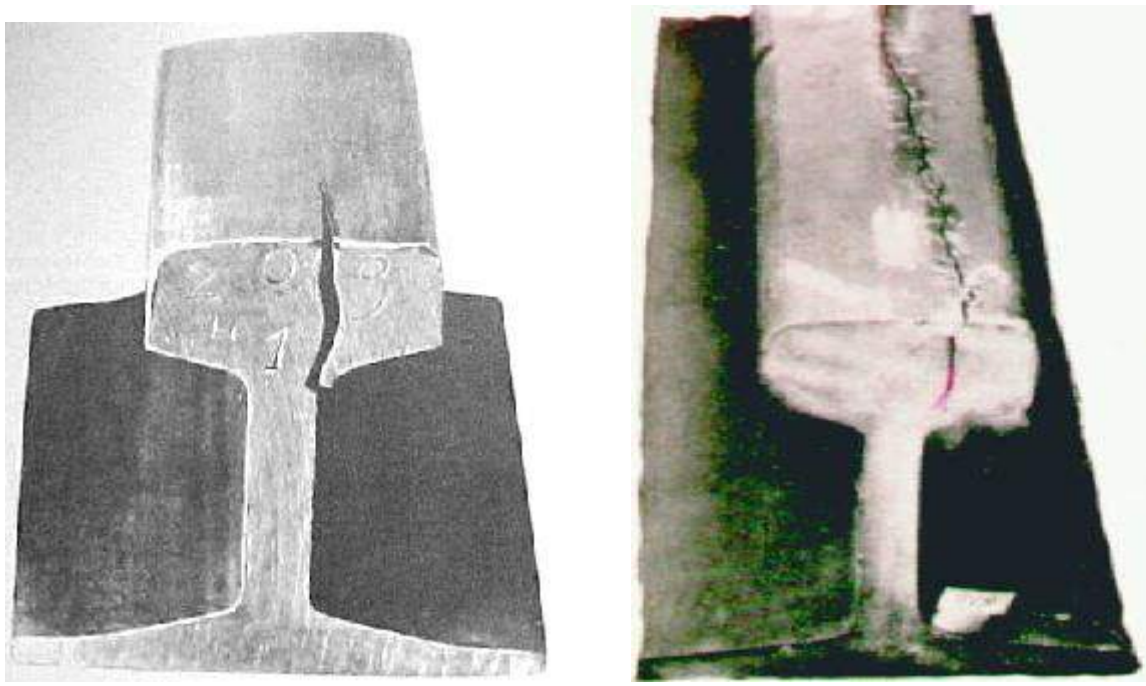

113

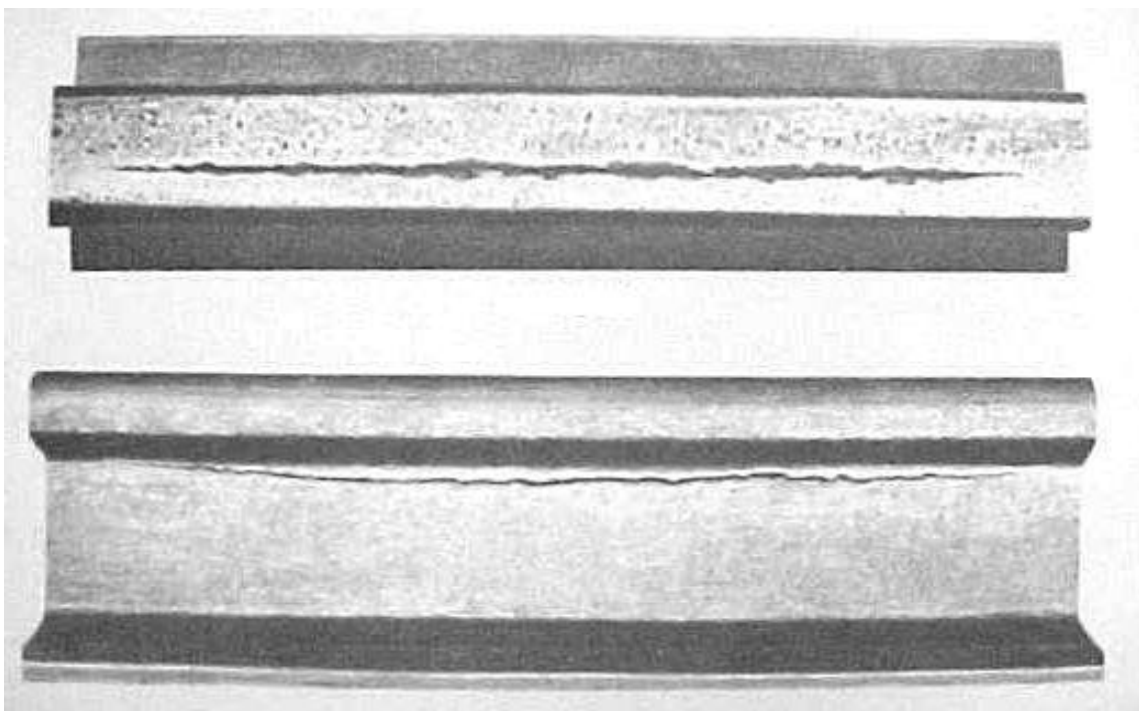

213

FIG. 35 : 113 OR 213 - INTERNAL FLAW IN HEAD , VERTICAL LONGITUDINAL SPLIT

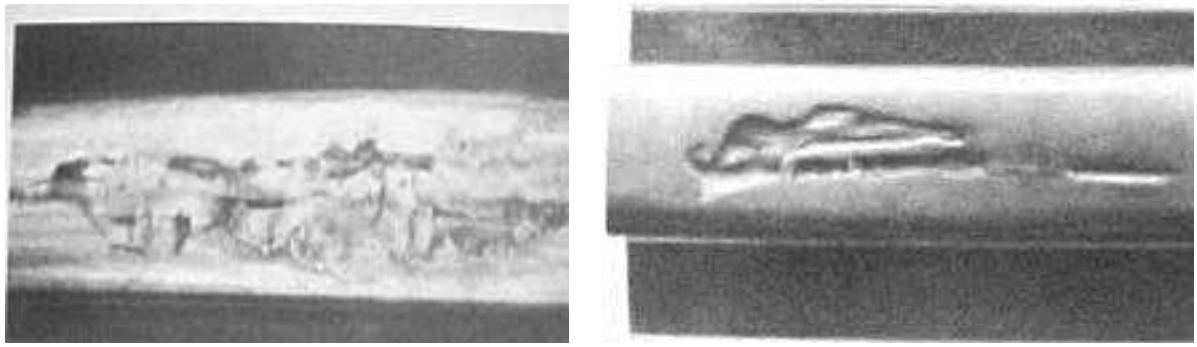

FIG. 36 : 1211 OR 2211 - HEAD, SURFACE, SHALLOW SURFACE DEFECT (FLAKING)

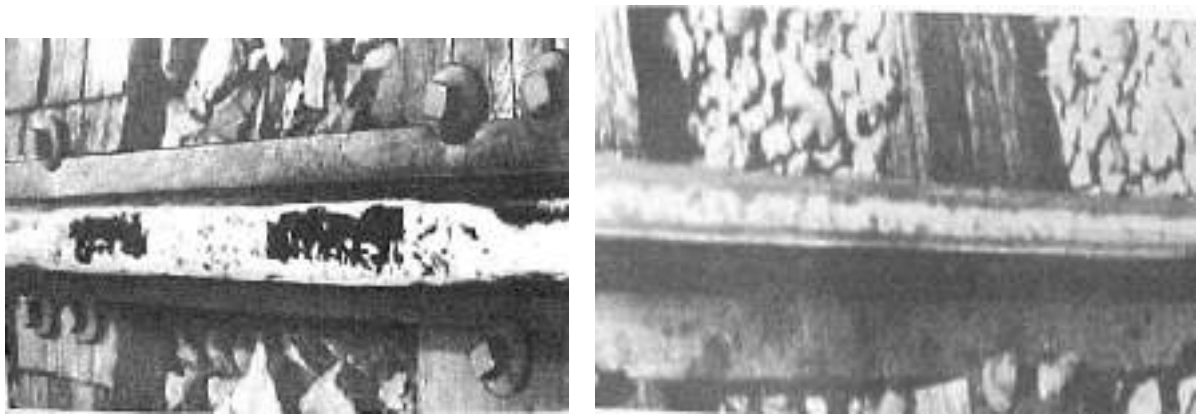

FIG. 37 : 1221 OR 2221 - HEAD, SURFACE, BREAKING OUT RUNNING SURFACE (SCABBING)

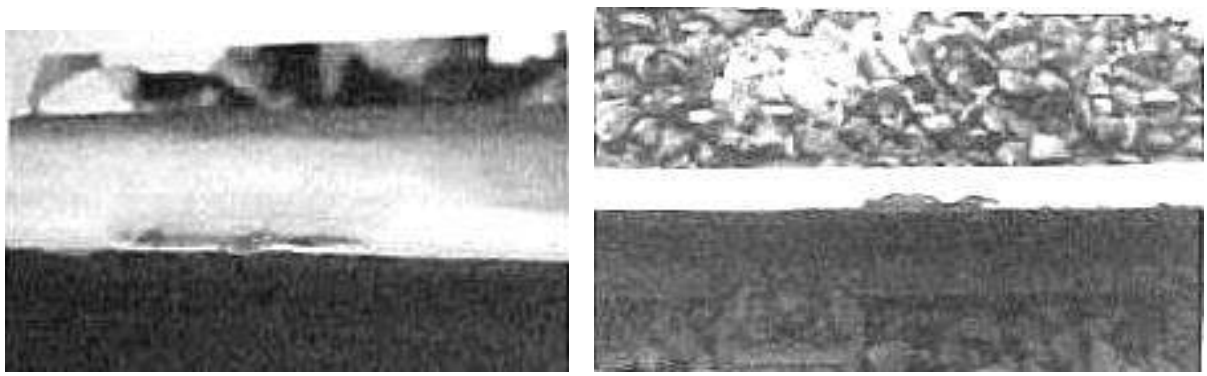

FIG. 38 : 1222 OR 2222 - HEAD, SURFACE, BREAKING OUT GAUGE CORNER (SHELLING)

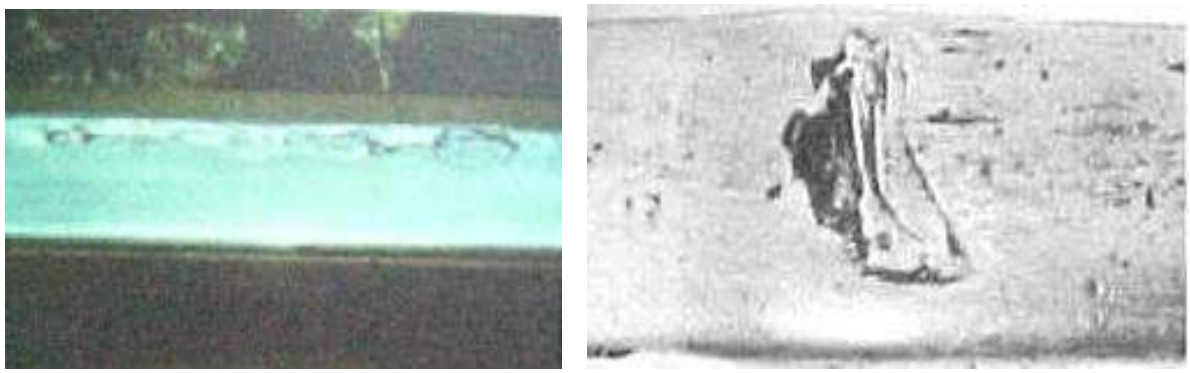

FIG. 39 : 2251 - HEAD, SURFACE, WHEEL BURN ISOLATED

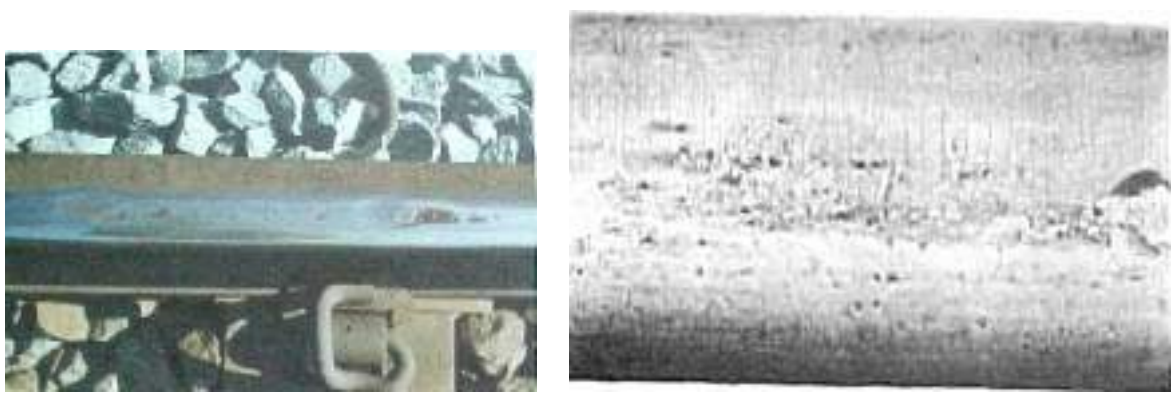

FIG. 40 : 2252 - HEAD SURFACE, WHEEL BURN REPEATED

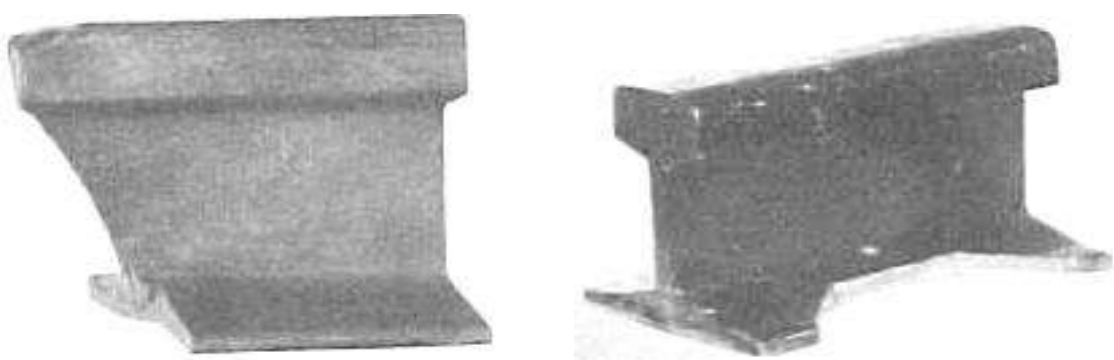

FIG. 41 : 153 OR 253 - FOOT VERTICAL LONGITUDINAL SPLIT
(HALF MOON CRACK)

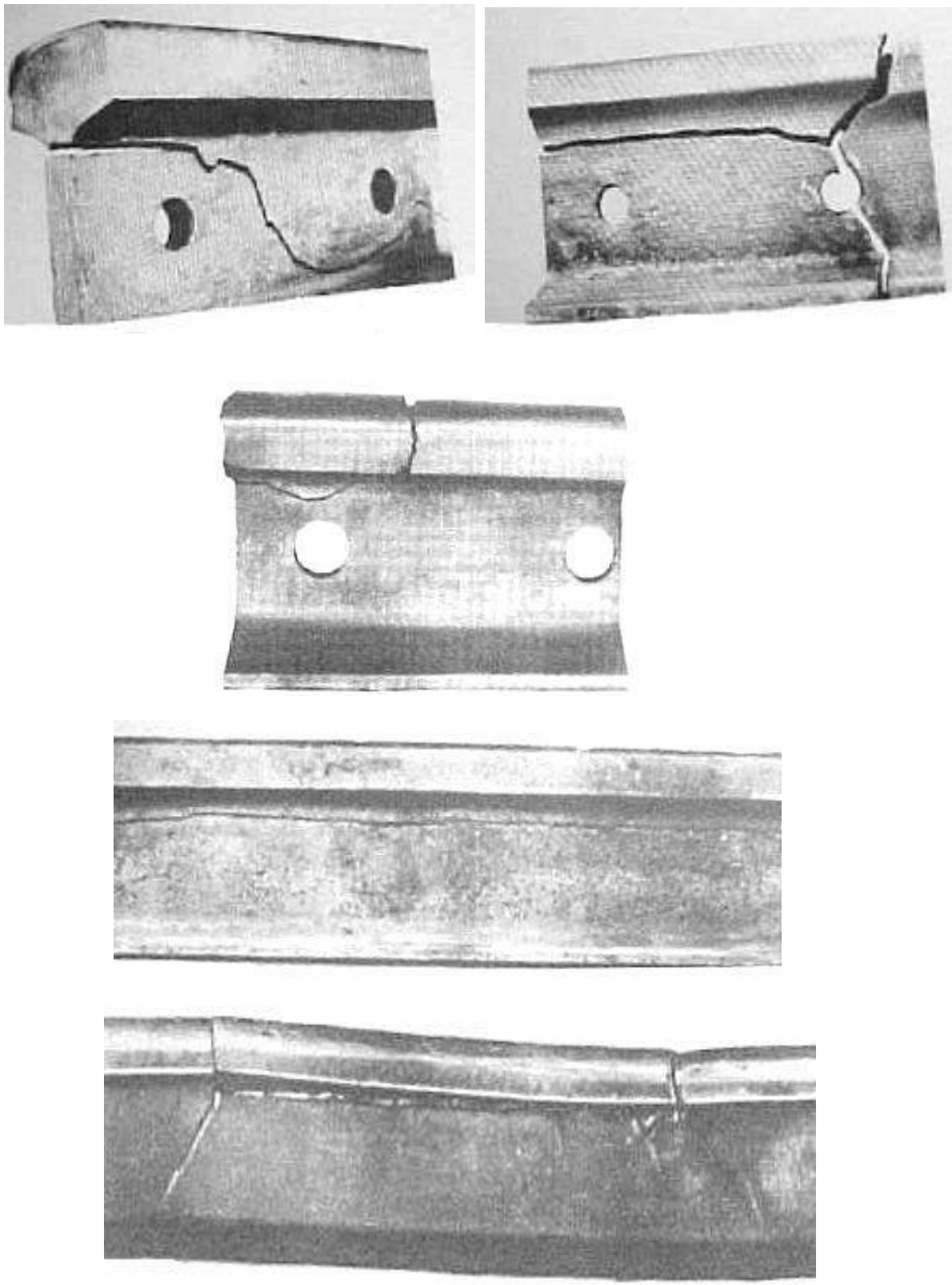

FIG. 42 : 1321 OR 2321 - WEB , HORIZONTAL CRACK, AT TOP FILLET RADIUS

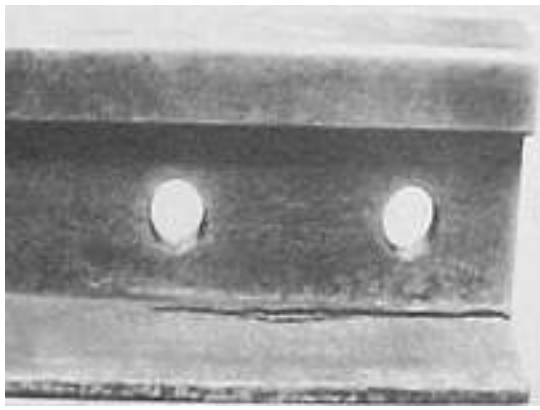

1322

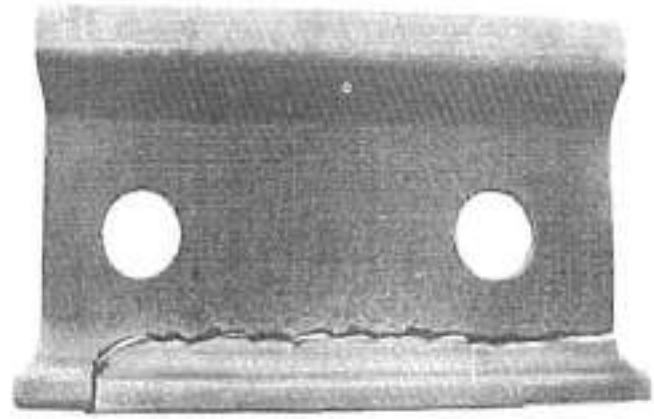

1322

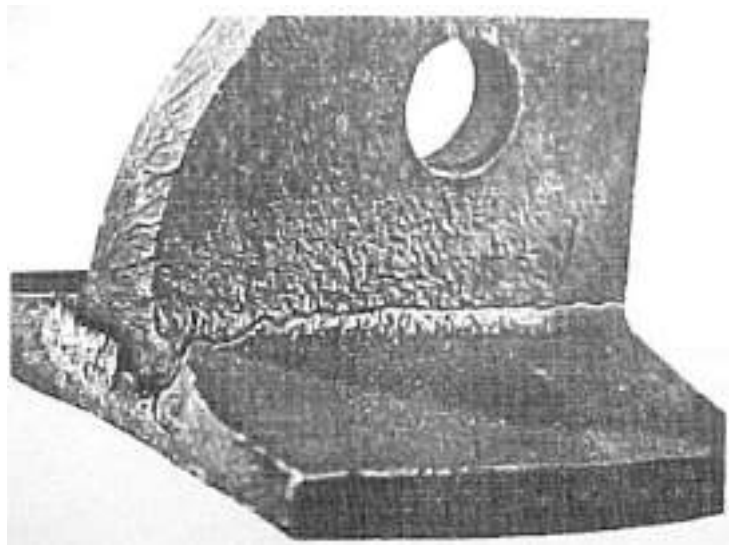

1322

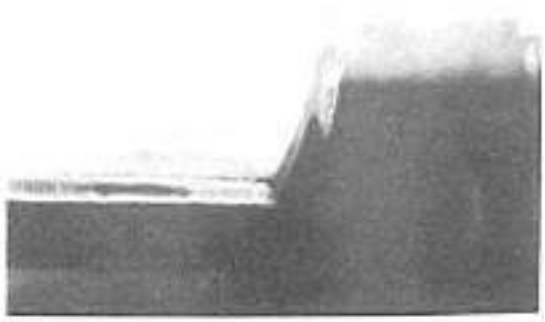

2322

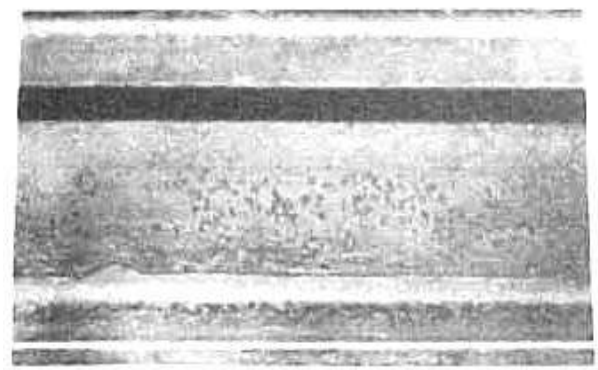

2322

FIG. 43 : 1322 OR 2322 - WEB, HORIZONTAL CRACK AT BOTTOM FILLET RADIUS

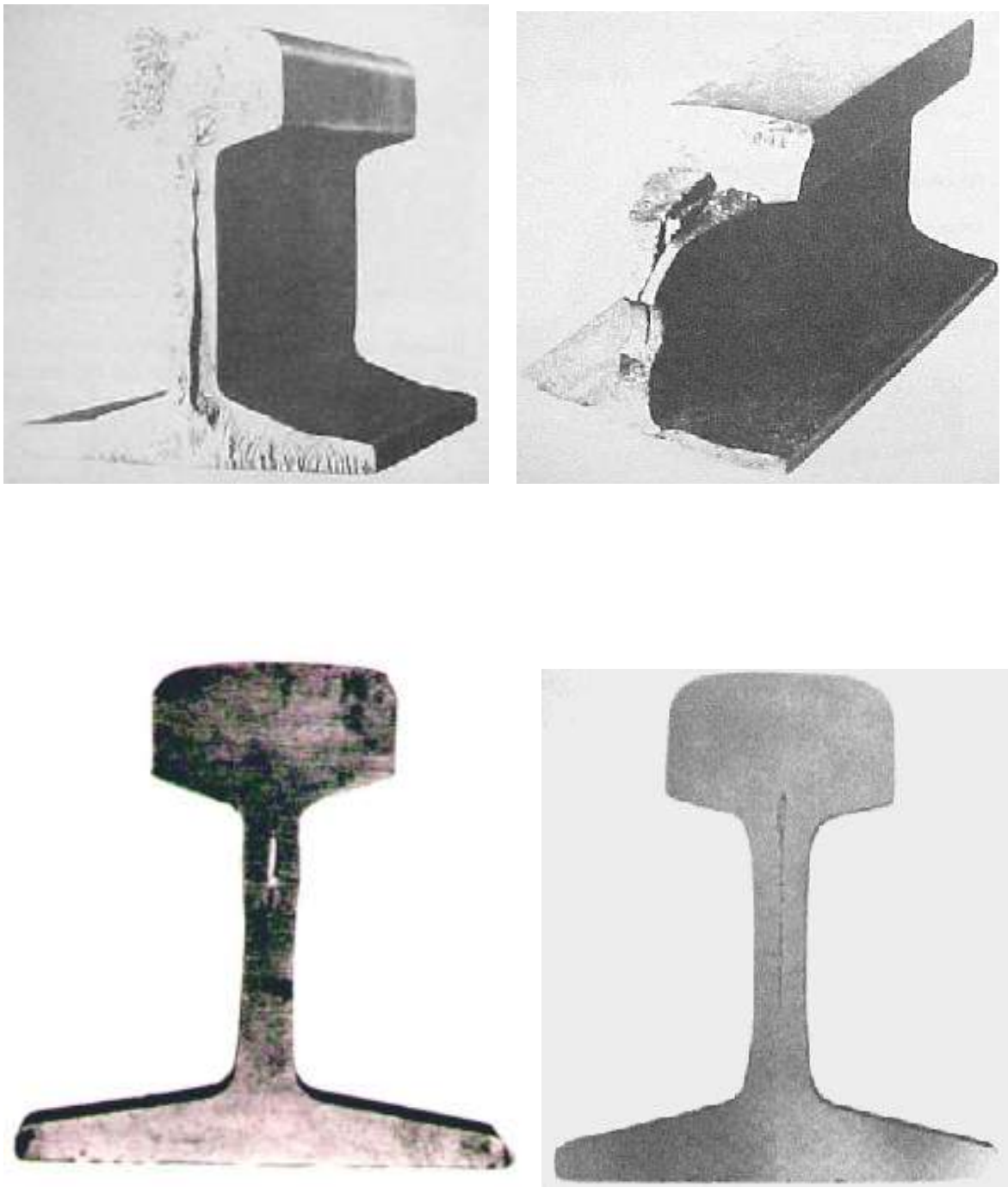

FIG. 44 : 133 OR 233 - WEB, VERTIVAL LONGITUDINAL SPLITTING (PIPING)

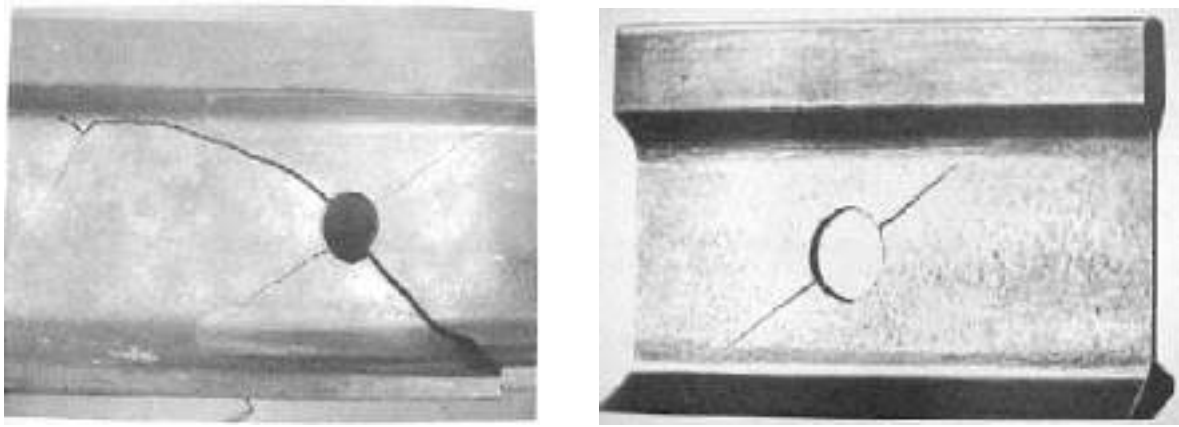

FIG. 45 : 135 OR 235 - WEB , CRACKS AT HOLE

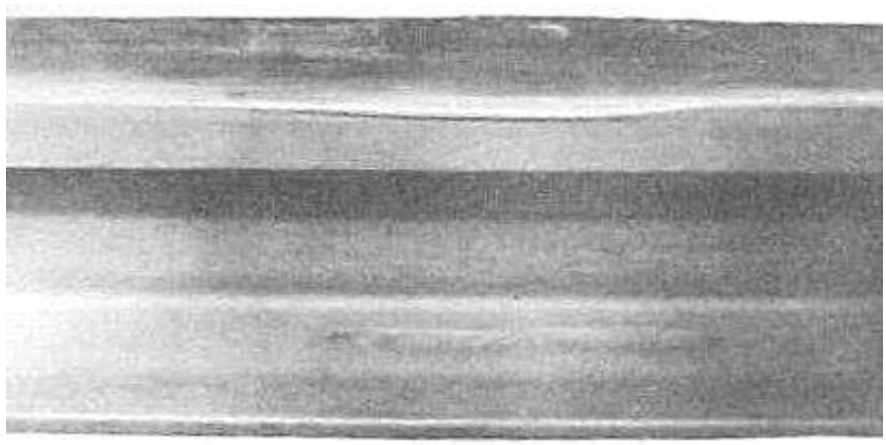

FIG. 46 : 124 OR 224 - HEAD, SURFACE LOCAL BATTER

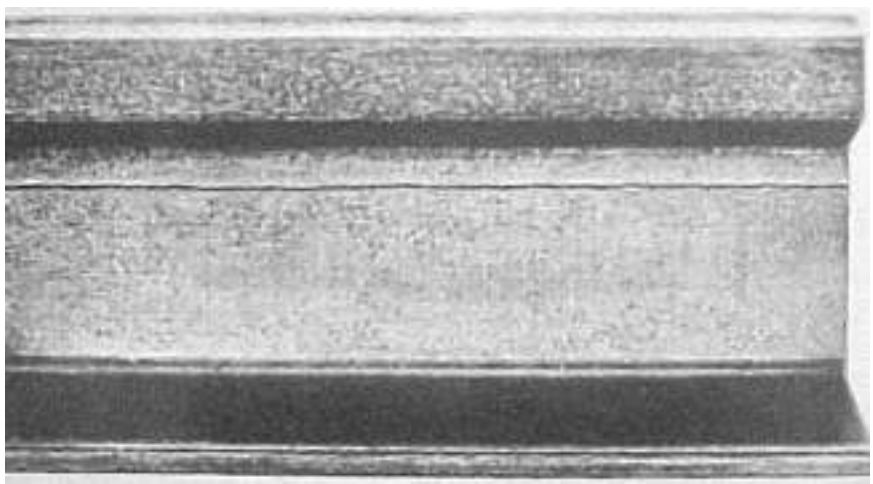

FIG. 47 : 139 OR 239 - WEB, LAP

FIG. 48 : 301 - DAMAGE TO RAIL BY BRUSHING OR ARCING

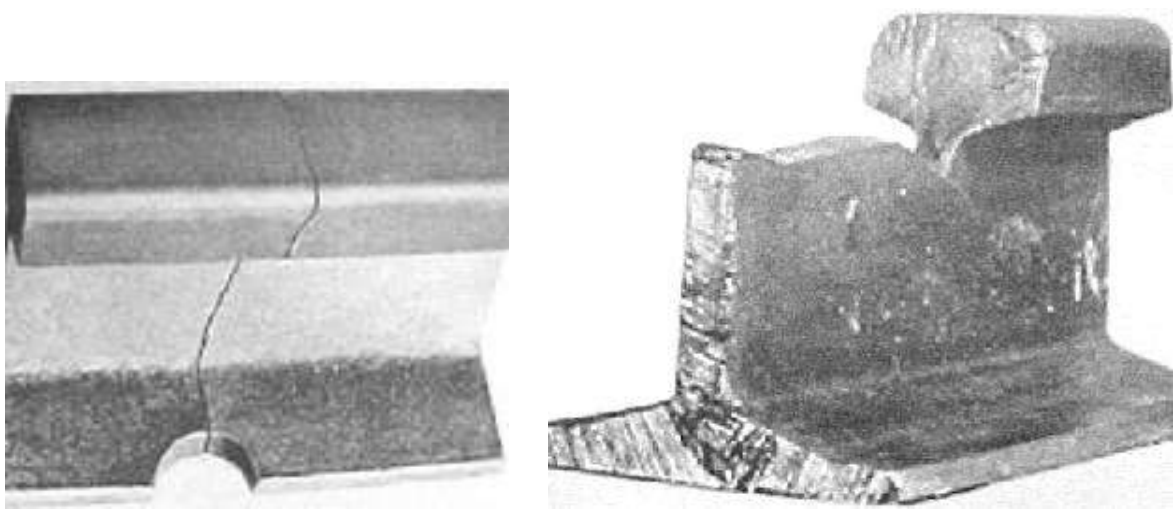

FIG. 49 : 302 -DAMAGE TO RAIL BY BAD MACHINING , DRILLING OR FLAME CUTTING

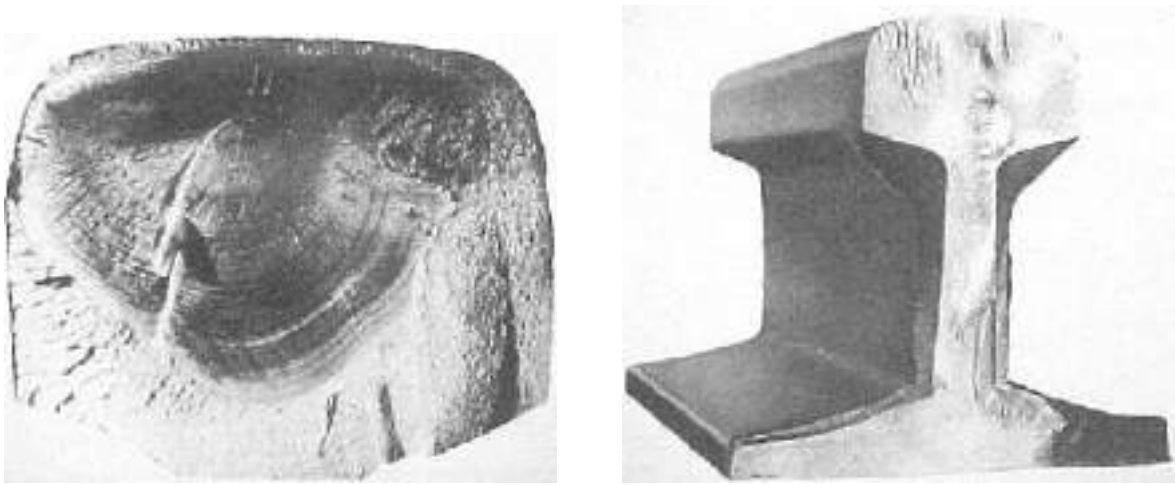

FIG. 50 : 411 - WELDING, FLASH BUTT JOINT, TRANSVERSE CRACK

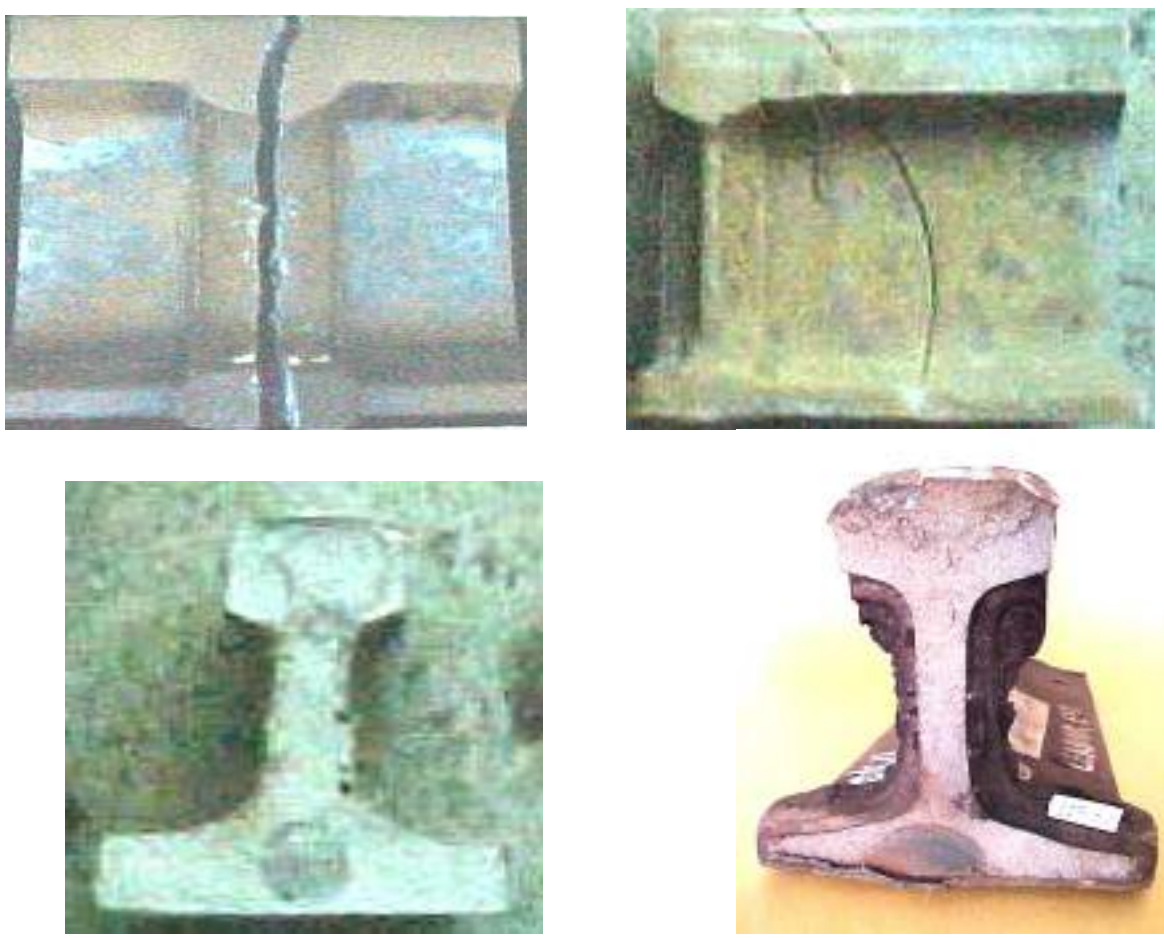

FIG. 51 : 421 - WELDING, THERMIT JOINT TRANSVERSE CRACK

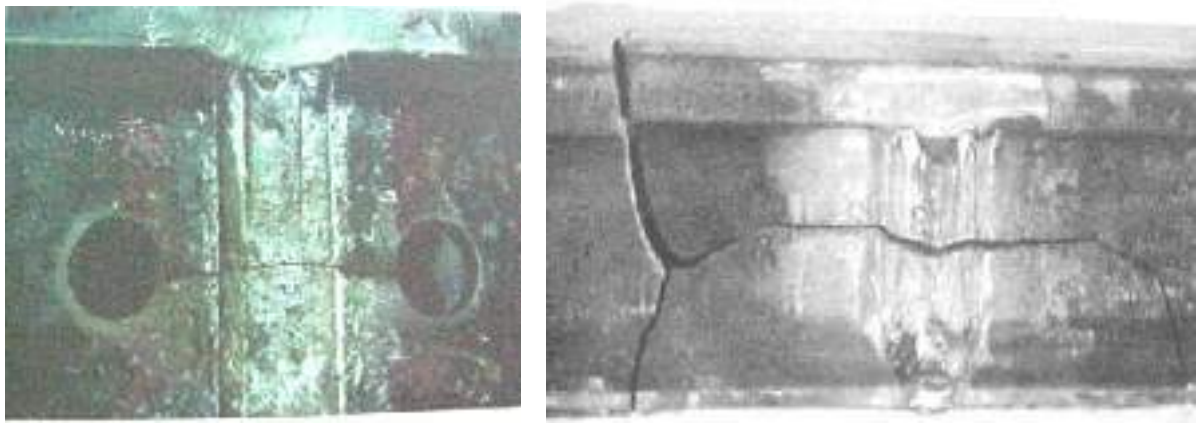

FIG. 52 : 422 - WELDING, THERMIT JOINT HORIZONTAL CRACK

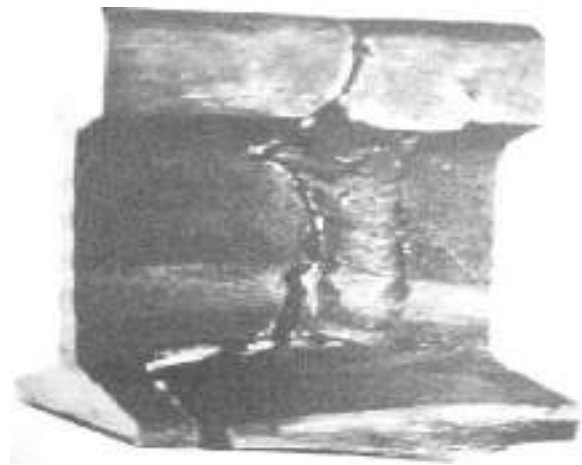

FIG. 53 : 431 - WELDING, ELECTRIC ARC JOINT TRANSVERSE CRACK

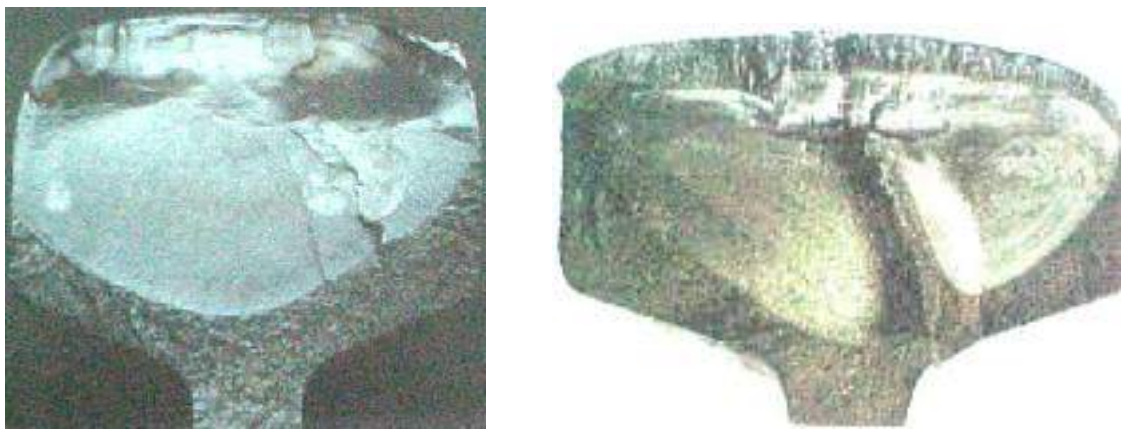

FIG. 54 : 471 - WELDING, BUILDING UP TRANSVERSE CRACKING OF HEAD ACROSS THE BUILT UP PORTION

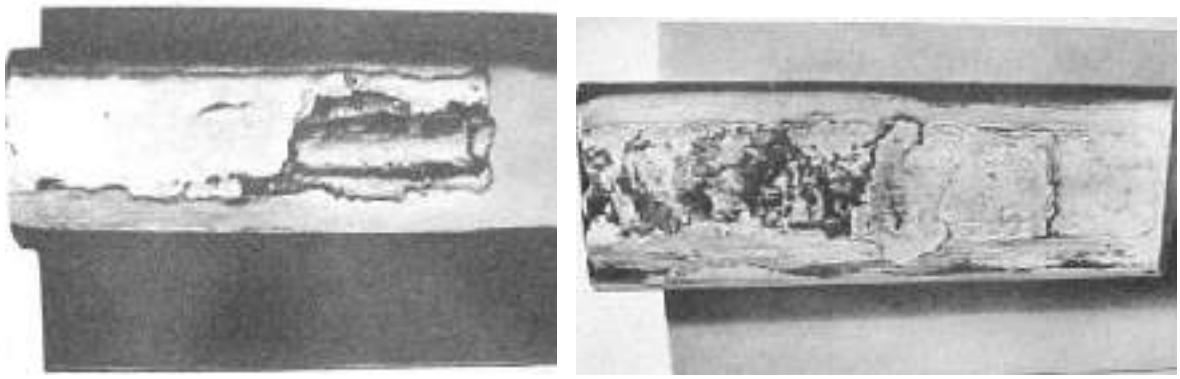

FIG. 55 : 472 - WELDING, BUILDING UP, BUILT UP PART BREAKS AWAY

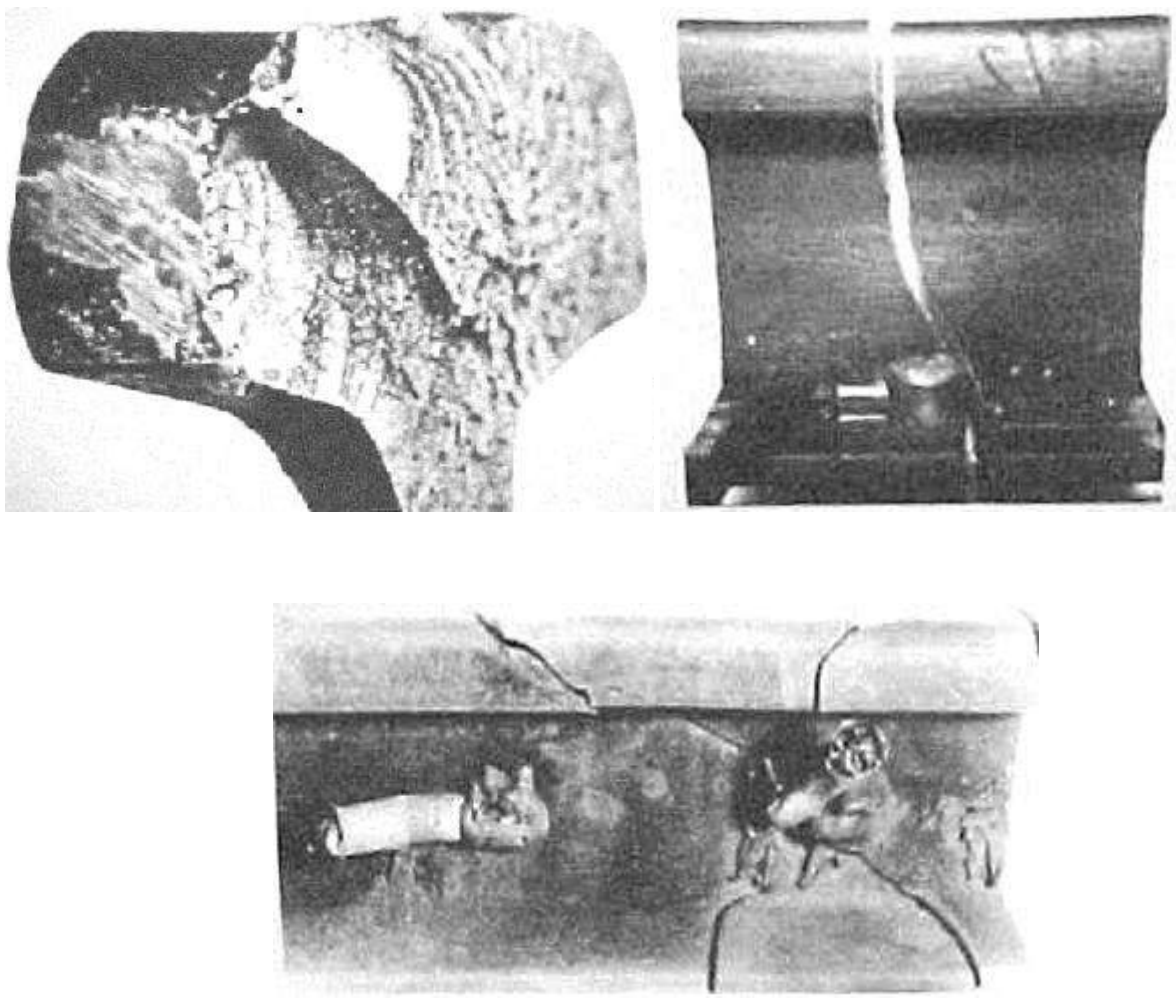

FIG. 56 : 481 - WELDING, TRACTION BOND WELDING CRACK AT WELD