SYSTEM DIAGRAM

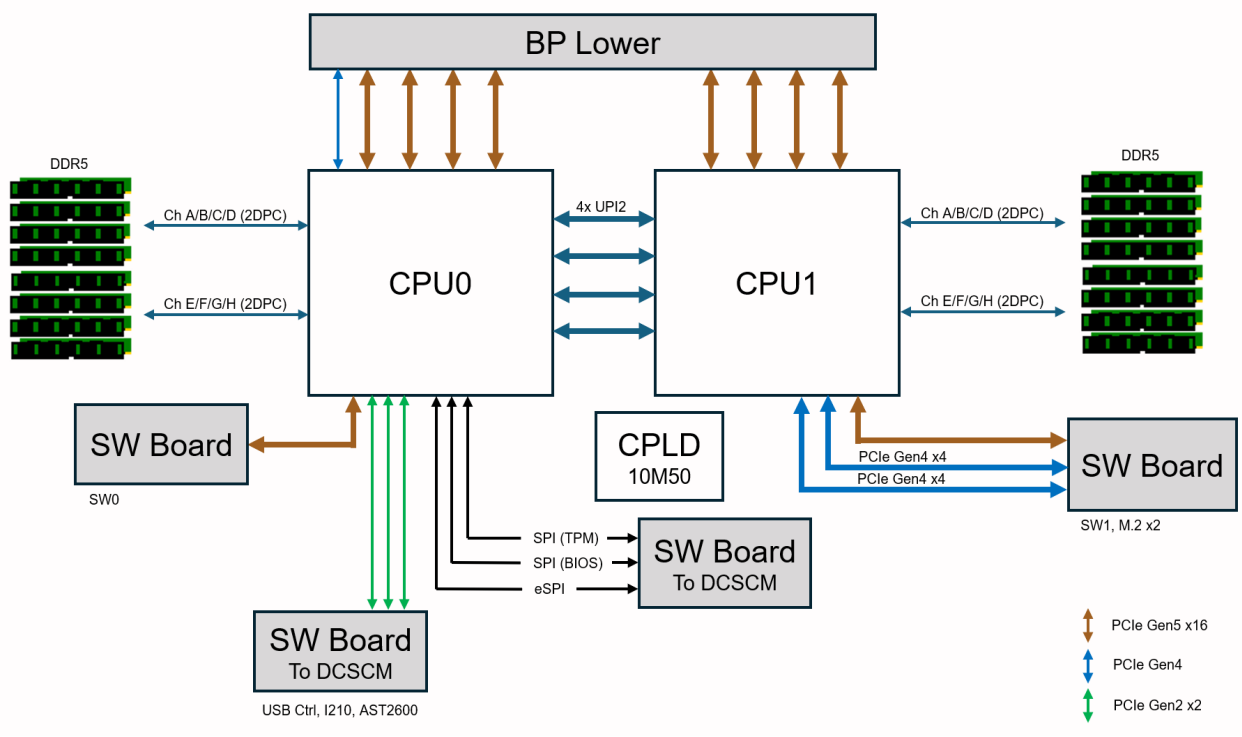

NVIDIA Corporation
2788 San Tomas Expressway
Santa Clara,CA 95051

Title
0009_SYSTEM DIAGRAM

Size	Document Number	Rev
Custom	DGX Rubin NVL8 MB	SA

Date: Monday, January 19, 2026 Sheet 9 of 459

SMBUS ARCHITECURE

MB I2C/ I3C Diagram (TS1)

8-bit address

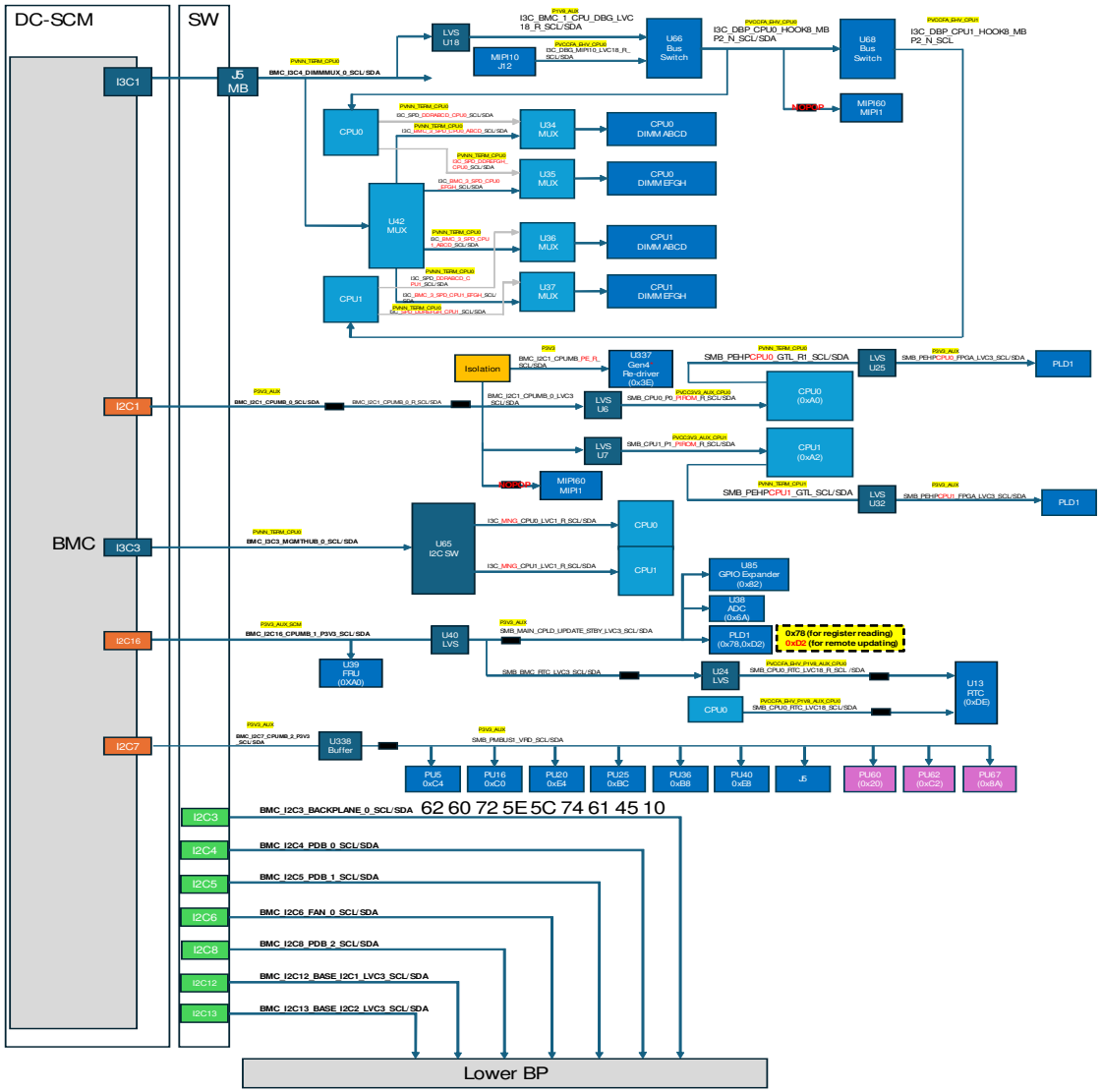

NVIDIA Corporation
2788 San Tomas Expressway
Santa Clara,CA 95051

File: 0017_SMBUS ARCHITECURE

Size: A2 | Document Number: DGX Rubin NVL8 MB | Rev: SA

Date: Monday, January 19, 2026 | Sheet 17 of 459

PCIe Diagram

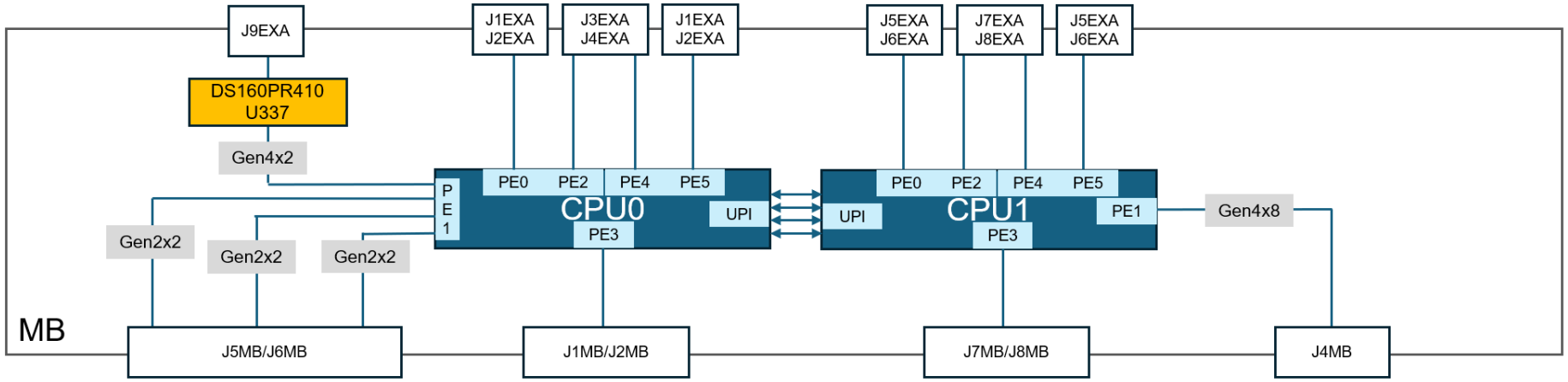

NVIDIA Corporation
2788 San Tomas Expressway
Santa Clara,CA 95051

Title: 0029_PCIE DIAGRAM

Size: Custom | Document Number: DGX Rubin NVL8 MB | Rev: SA

Date: Monday, January 19, 2026 | Sheet 29 of 459

Viking B300 Change List

pg57 1A_0424_add PCIe Gen4 Redriver
Modify net name.

pg 169 1A_0429_add PCIe Gen4 Redriver
CPU0=>Redriver=>Lower BP

pg 411 SA_0527_POP PR264, NOPOP PR266
to fix the P3V3_AUX and VCC3V3_AUX sequence.

pg 182 SA_0527_POP R261
FM_CPU0_CD_INIT_ERROR_LVC3

pg 183 SA_0527_POP R286
FM_CPU1_CD_INIT_ERROR_LVC3

pg 204 SA_0527
To bypass the SPI LVS for CPU SPI.
POP R526, R527, R546, R548, R550, R552,

Depop U9, C957, C955, C958, R544
Depop R532,R533,R534,R535,R536,R537,R538,R539,R540,R541,R542,R543

pg 351 SA_0527 To bypass the SPI LVS U62 for CPU SPI TPM.
POP R2067, R2068, R2069, R2070
and Depop U62,C1271,C1272,
R1660,R1661,R1662,R1663,R1664,R1656,R1657,R1658,R1659,
R2071,R2072,R2073,R2074

pg 330 SA_0527_NOPOP R1517

pg 192, 302, 323, 338, 387
NOPOP JUMP_J1,JUMP_J10,JUMP_J11,JUMP_J16,JUMP_J9

pg 36, CPU Carrier, 022.70025.0002 not add to EE BOM

0609

pg 280, NOPOP R1163
to Cut off the path P3V_BAT_CPU0 to ADC.

pg 447, 1A_VR I2C
SMB_PMBUS1_VRD_SCL/SDA to PU54, PU55

pg 311,330 1A_removed the unused.
RST_PLTRST_CPU0_PLD_LVC18_N

0612

pg159, 1A_0612_SPI LVC removed, and SW will reserved another SPI LVC solution.
assign power pin J2MB.C1 and J2MB.D1
PVCCFA_EHV_P1V8_AUX_CPU0

pg261, 169
1A_0617_add isolation to main power SMBUS to U337

pg314, 291
1A_0617 Add PD resistor for PERST to SW board.
(PUSH PULL)
R2759,R2760,R2761,R2762,R2763

pg290 for Board ID set 011
1A_0618_POP R1240 and NOPOP R1244

pg282, 251
SA_0618_To improve the I2C16 signal
Pop R1196/R1197 with 2.2K
Change R921 / R920 to 4.7K

pg 251, 209 1A_0625_I2C16
remove 2k PU resistor R582, R583 on U24 A-side.
replace U24 from (PCA9617A) to (TCA9509)

pg 258, 282, 1A_0625_I2C16
damping series resistor R939, R940 change to 0ohm.
damping series resistor R1205, R1206 change to 0ohm.

pg 224 1A_0625_I2C7
Add PCA9617A buffer (+Bypass)

pg 204, 350, 351 1A_0625_BIOS/TPM SPI
Remove U9, U62 LVC and related parts

pg 331, 332, 333, 358, 334
1A_0627_Remove LED.
LED16,LED17,LED19,LED20,LED21,LED22,LED23,LED24,LED25
LED26,LED27,LED28,LED29,LED30,LED32,LED35,LED36,LED37
LED38

pg 302, 338.
1A_0627_Remove useless header J9, J11.

pg 350, 351_1A_0701
Remove R1645, R1646, R1647, R1648.
Remove unused PU.

pg192, 289_1A_0701
Add VR EN for CPLD control.
FM_CPU0_PVCC3V3_AUX_EN_LVC3

pg 282_1A_0701
U40, A-B side ex-change to meet TI feedback.

pg74_1A_0701
Add 2x CPU1 testpoint for ATE request (BSDL)

pg 441, 444, 446 _1A_0701_DC
PC594/ PC626/ PC654 change to 1uf (078.10522.08F1)

pg 186 1A_0701_CPU0_GPIO0
R343 change to POP.

pg 291 1A_0701_
POP R1265 and CPLD could control CPU0 GPIO2.

pg 196, 187 1A_0701
add 2 port bidirectional open-drain buffer

pg 192 1A_0701
Remove header J2, and FM_MFG_MODE connect to CPLD.

pg 289 1A_0701
Add CPU1 GPIO2, and GPIO3 to CPLD.

pg 411 1A_0702 PVCC3V3_AUX_CPU0
POP PR266, NOPOP PR264 for VR EN.

pg 15, 17, 29, 32 1A_0707
Update Diagram

pg 44 1A_0709
For Signal quality, from 0ohm to 33ohm: R2067, R2068, R2069.

pg 204 1A_0710
For Signal quality, from 0ohm to 22ohm: R526, R527, R546, R548, R550, R552

pg 11 1A_0714 update power diagram

pg 169 1A_0722
R2743 59k ohm, 0402, change to 064.59025.M009

pg 192, 193, 323, 369, 387 1A_0722
021.D0360.L001 change to 080-1879-000

pg 202, 203 1A_0815
I2C Port 1
R466, R467, R481, R482: change 511£[to 1k£[(064.10015.M011)

pg 391, 414 1A_0829
I2C Port 7
1. NOPOP PR11,PR12
2. PR275/PR276 change 4.99k to 806ohm (195-3099-000, 064.80605.M008)

pg 391, 402, 407, 414, 425, 430, 447 1A_0815
I2C Port 7
3. change to?22 ohm (064.22R05.M006)
PR13,PR14,PR134,PR135,PR202,PR203,PR277,PR278,
PR398,PR399,PR466,PR467,PR631,PR632,PR635,PR636

DGX Rubin NVL16 MB Change List

251014-SA

PG.151,152,153,154,155
20250910:J1EXA,J2EXA,J3EXA,J4EXA,J5EXA,J6EXA,J7EXA,J8EXA,J9EXA Change to EXAMAX2 Conn PN:020.83150.0112

PG.159,160,161,162
20250910: J1MB,J2MB,J3MB,J4MB,J5MB,J6MB,J7MB,J8MB Change to EXAMAX2 Conn PN:020.83264.0112

PG.155
20250911
1. Original PU_CNGB8_A7 from B300 BP
2. Remove P12V_AUX and add MB FPGA to GPU Board signal
3. Add P3V3_AUX for BP FRU Circuit

PG.291
20250911
1. Delete BP_CPLD_INTERLOCK3/ CPLD_INTERLOCK3
2. BP_MID_SYSTEM_READY replace with PEX_STRAP0
3. BP_CPLD_INTERLOCK2 replace with MB_ID0
4. BP_CPLD_INTERLOCK1 replace with MB_ID1

PG.292
20250911
1. GPU_ALL_BMC_TH_OVERT_N replace with GPU_PWR_BRAKE_N
2.ALL_OTHER_WP_N replace with GPU_BASE1_CPLD_READY
3. GPU1_INT_BMC_MCU2_N replace with PEX_RST0_N
4. CPU1_PERST_N replace with PEX_RST1_N
5. PCIE_RST_GPU_N replace with PEX_RST2_N
6. GPU_THROTTLE_N replace with GPU_BASE_ID0
7. PSU_PSON/PS_ON_N replace with GPU_BASE_ID1
8. CPU0_PERST_N replace with GPU_BASE_PWR_EN
9. PSU_AC_OK_ALL replace with GPU_THERM_OVERT_N
10. GPU_BASE1_CPLD_RST replace with GB1_I2C2_ALERT_N
11. GPU1_INT_BMC_MCU1_N replace with PEX_STRAP1

PG.338
20250911: Delete PSU_PSON/PS_ON_N circuit, PSU PS_ON for R200, need pull down on EV Board.

PG.155
20250915
1. Add PU J9EXA_A1 from B300 BP
2. Add PU J9EXA_A7 from B300 BP

PG.338
20250915: Add power cycle circuit

PG.155
20250916: Add MB FPGA to GPU Board signal

PG.175
20250916: Remove J3PWR,J4PWR

PG.288
20250916
1. POP R2045
2. GB1_I2C1_ALERT_N add PU

PG.291
20250916: AC_POWER_CYCLE_N change to output pin

PG.338
20250916: Update AC power cycle circuit

PG.175
20250918:
1. Remove J1PWR,J2PWR
2. Power of J3PWR and J4PWR change to P54V
3. PN of J3PWR,J4PWR change to 020.83017.0012(HF)
4. PN of J5PWR,J6PWR,J7PWR,J8PWR change to 020.83043.0024(HF)
5. 5. Add J9PWR

PG.113,115,117,119,121,123,125,127,129,131,133,135,137,139,141,143
20250918: Replace 062.10057.001M(White) with 062.10057.002F(Blue)

PG.289
20250919: Delete FM_P12V_VRM2_ALERT_N

PG.290
20250919: Add P54V_PG

PG.291
20250919:
1. NOPOP R2045
2. Add PU for FM_P12V_VRM_ALERT_N

PG.292
20250919: PSU_PWROK_BUF change to NC

PG.331
20250919: Remove PSU_PWROK_BUF (From MB CPLD to BP CPLD)

PG.446
20250919: Add P12V_AUX_PG for P5V_AUX EN

PG.153
20250925:Remove VIKING_DET_1_N and VIKING_DET_0_N

PG.155
20250925: BP remove FRU, delete P3V3_AUX

PG.175
20250925: J9PWR change to 020.83017.0012

PG.291
20250925:
1. Add PD 2K resistor for GPU_BASE_STBY_EN
2. Add PU 10K resistor for GPU_BASE_HMC_PRSNT_N
3. Reserve PU/PD resistor for GPU_BASE_HMC_READY

PG.292
20250925:
4. Add PU resistor for GPU_BASE1_PRSNT_N
5. Add ESD for BUSBAR1_SNS and BUSBAR2_SNS

PG.289
20251001: Add FM_P12V_VRM2_ALERT_N

PG.291
20251001: Add BP_BASEBOARD_ALERT_N

PG.292
20251001:
1. Remove MIDPLANE_FAN_ALERT_N
2. Remove PSU_ALERT_N

PG.301
20251001: Remove MID_CPLD_NCONFIG,MID_CPLD_BOOT_SEL

PG.338
20251001: Remove BUFF_BP_PWR_S0_EN

PG.291
20251002: Add PWRGD_P12V_VRM2

PG.338
20251002: Change P54V to P54V_BP_AUX, P54V and P54V_BP_AUX are from busbar power.

PG.291
20251003: NOPOP R2847 on GPU_BASE_STBY_EN

PG.292
20251008: Remove PSU_DETECT_N

PG.248
20251009: Remove all temp sensor

PG.289
20251011: Delete FM_P12V_VRM2_ALERT_N

PG.291
20251011: Delete PWRGD_P12V_VRM2

PG.338
20251016: X5R 032-2268-000 changed to X6S 078.10713.M014

PG.222
20251023: Q3 change PN from 075.07002.0C7C to 075.27002.0K7C

PG.324
20251023: Q7 Change PN from 084.00020.0A31 to 084.03400.0A31

PG.338
20251023: Q120,Q131 change PN from 075.07002.0C7C to 075.27002.0K7C

PG.368
20251023: Q116 change PN from 075.07002.0C7C to 075.27002.0K7C

PG.74
20251025: Add TP296,TP297,TP298 for ATE request

PG.457
20251027: Change P12V_VRM flying caps PN to 078.10624.M015(GRM31CD71H106KE11L)

PG.292
20251126: For CPLD fine tune, delete R2006, pop R2799

PG.220
20251211: According to EA test result,there was overshoot issue, change R633 from 0 to 33 ohm.

PG.154
20251217:
1. NC_GPU_BASE1_CPLD_RST change to S_UPHY0_BIF_PERST_R_L
2. J8EXA add S_UPHY0_BIF_PERST_R_L and PU/PD resistor(Nopop)

PG.155
20251219: J9EXA add Gen5 x2 PCIE and HCSL_CLK_UPHY0_BIF_P/N for BF4

PG.162
20251219:
1. J4MB add Gen5 x2 PCIE and HCSL_CLK_UPHY0_BIF_P/N for BF4
2. J3MB add S_UPHY0_BIF_PERST_R_L

PG.154:
20260112:
1. NC_GPU1_INT_BMC_MCU2_N change to S_UPHY0_PRI_PERST_R_L
2. J8EXA add S_UPHY0_PRI_PERST_R_L and PU/PD resistor(Nopop)

PG.155
20260112: J9EXA add HCSL_CLK_UPHY0_PRI_P/N

PG.162
20260112:
1. J4MB add HCSL_CLK_UPHY0_PRI_P/N
2. J3MB add S_UPHY0_PRI_PERST_L

PG.153
20260113: NC_PS_ON_N change to MCU_RECOVERY on J6EXA

PG.292
20260113: Add MCU_RECOVERY and PU/PD resistor

NVIDIA Corporation
2788 San Tomas Expressway
Santa Clara,CA 95051

Title	0039_Fractal R200 Change List	
Size A2	Document Number DGX Rubin NVL8 MB	Rev SA
Date: Monday, January 19, 2026	Sheet 39 of 459	

NVIDIA Corporation
2788 San Tomas Expressway
Santa Clara,CA 95051

Title
0345_-----NVDIMM-----

Size A3 | Document Number DGX Rubin NVL8 MB | Rev SA

Date: Monday, January 19, 2026 | Sheet 345 of 459

NVIDIA Corporation
2788 San Tomas Expressway
Santa Clara,CA 95051

Title: 0389_-----VR CPU POWER-----

Size: A2 | Document Number: DGX Rubin NVL8 MB | Rev: SA

Date: Monday, January 19, 2026 | Sheet 389 of 459

Power rail: PVCCIN_CPU0(8Phase)
Controller: XDPE192C4C
VOUT: 1.83V / VBOOT: 1.8V
TDC : 212A
MAX : 398A
FSW = 800KHZ
SVID ADDR 00h/Bus0

Power rail: PVCCFA_EHV_FIVRA_CPU0(2Phase)
Controller XDPE192C4C
VOUT: 1.8V / VBOOT: 1.8V
TDC : 57A
PEAK : 57A
FSW = 1000KHZ
SVID ADDR 03h/Bus0

Input filter for South

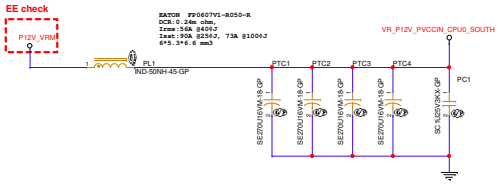

Input filter for North

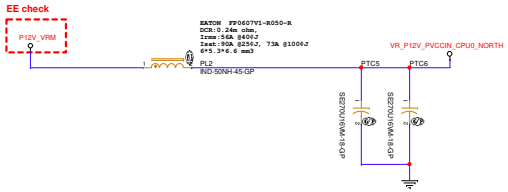

Output CAP North

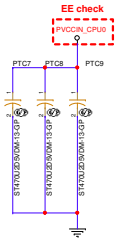

Output CAP South

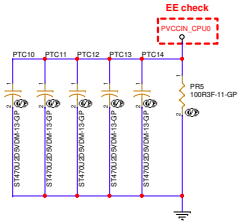

NVIDIA Corporation
2788 San Tomas Expressway
Santa Clara,CA 95051

Title: 0390_PVCCIN_CPU0_LC Filter

Size: A2 | Document Number: DGX Rubin NVL8 MB | Rev: SA

Date: Monday, January 19, 2026 | Sheet 390 of 459

Power rail: PVCCIN_CPU0(8Phase)
Controller: XDPE192C4C
VOUT: 1.83V / VBOOT: 1.8V
TDC : 212A
MAX : 398A
FSW = 800KHZ
SVID ADDR 00h/Bus0

Power rail: PVCCFA_EHV_FIVRA_CPU0(2Phase)
Controller XDPE192C4C
VOUT: 1.8V / VBOOT: 1.8V
TDC : 57A
PEAK : 57A
FSW = 1000KHZ
SVID ADDR 03h/Bus0

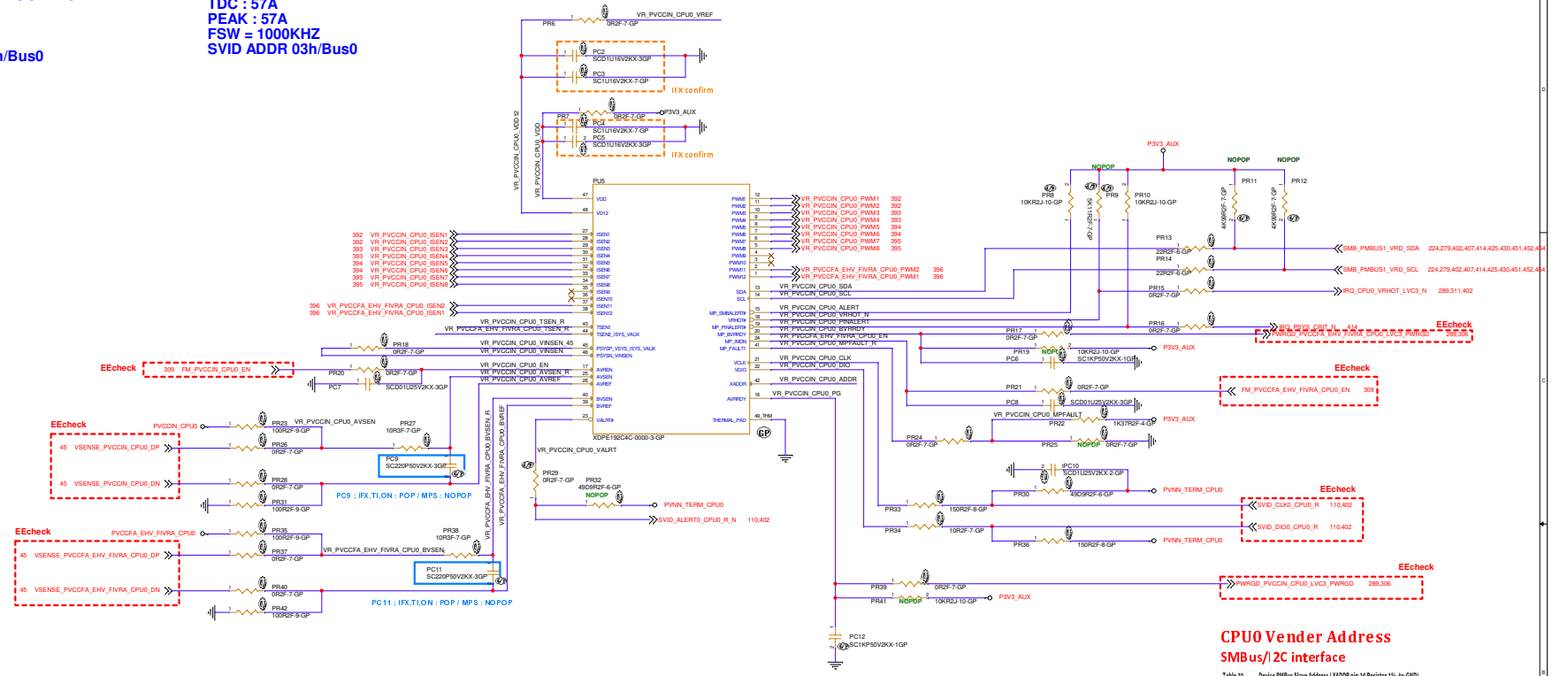

VIN Sense

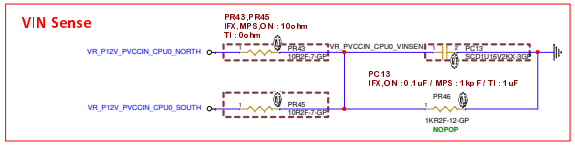

Power stage thermal sense

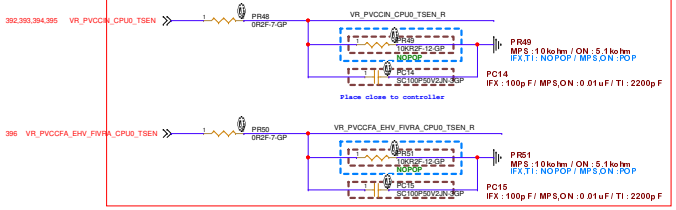

I2C Address: C4(8bit)/62(7bit)

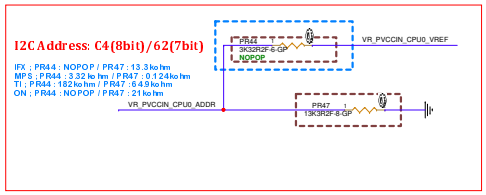

CPU0 Vender Address

SMBus/I2C interface

Table 30 Device PMBus Slave Address | XADDR pin 34 Resistor 1% -to-GND)

R_{XADDR}	Default address <7-bit Address>	Address Option1 (Offset Stride = 2)	Address Option2 (Offset Stride = 1)
≥ 49.9 kΩ	0x58	Stored 7-bit Base Address 0x08 – 0x77	Stored 7-bit Base Address 0x08 – 0x77
38.3 kΩ	0x5A	Base Addr + 2	Base Addr + 1
29.4 kΩ	0x5C	Base Addr + 4	Base Addr + 2
22.6 kΩ	0x5E	Base Addr + 6	Base Addr + 3
17.4 kΩ	0x60	Base Addr + 8	Base Addr + 4
13.3 kΩ	0x62	Base Addr + 10	Base Addr + 5
10.2 kΩ	0x64	Base Addr + 12	Base Addr + 6
7.87 kΩ	0x66	Base Addr + 14	Base Addr + 7
6.04 kΩ	0x68	Base Addr + 16	Base Addr + 8
4.64 kΩ	0x6A	Base Addr + 18	Base Addr + 9
3.57 kΩ	0x6C	Base Addr + 20	Base Addr + 10
2.67 kΩ	0x6E	Base Addr + 22	Base Addr + 11
2 kΩ	0x70	Base Addr + 24	Base Addr + 12
1.47 kΩ	0x72	Base Addr + 26	Base Addr + 13
1.07 kΩ	0x74	Base Addr + 28	Base Addr + 14
≤ 680 Ω	0x76	Base Addr + 30	Base Addr + 15

NVIDIA Corporation
2788 San Tomas Expressway
Santa Clara,CA 95051

Title: 0391_PVCCIN_CPU0_Master
Size: A2 | Document Number: DGX Rubin NVL8 MB | Rev: SA
Date: Monday, January 19, 2026 | Sheet 391 of 459

Power rail: PVCCIN_CPU0(8Phase)
Controller: XDPE192C4C
SPS:IFX TDA22594A/ MPS MP87290
VOUT: 1.83V / VBOOT: 1.8V
TDC : 212A
MAX : 398A
FSW = 800KHZ
SVID ADDR 00h/Bus0

PVCCIN CPU0 PH_1-2

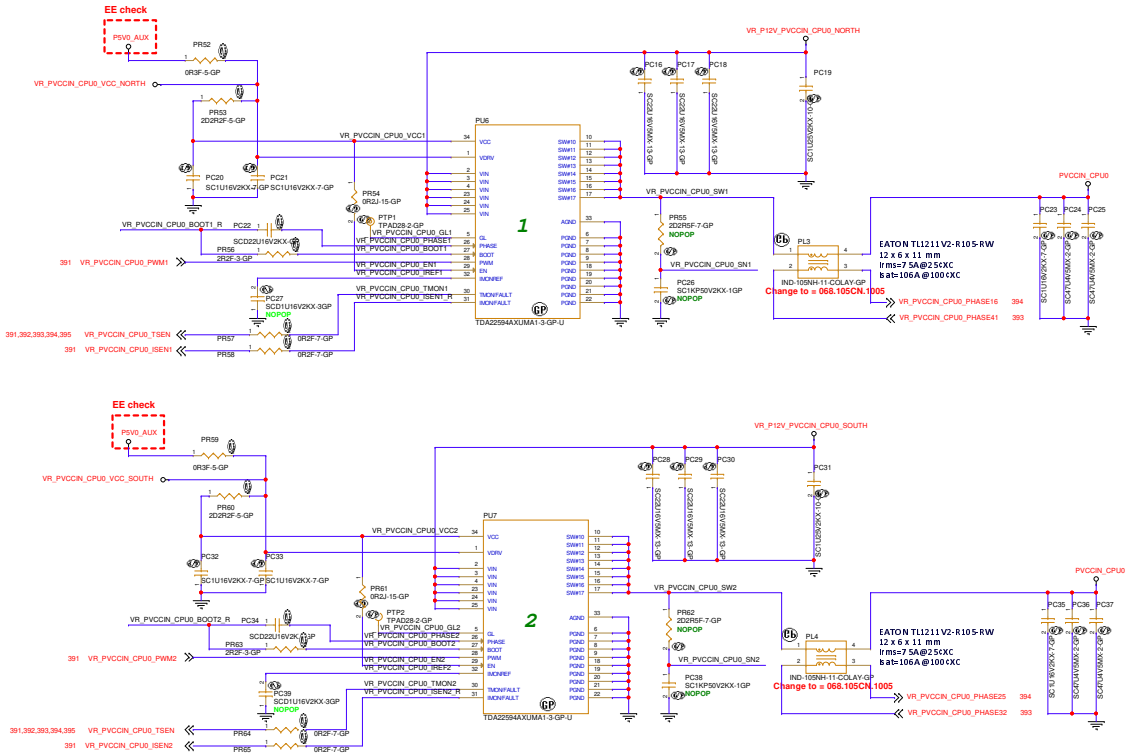

NVIDIA Corporation
2788 San Tomas Expressway
Santa Clara,CA 95051

Title: 0392_PVCCIN_CPU0_SPS1

Size: A2 | Document Number: DGX Rubin NVL8 MB | Rev: SA

Date: Monday, January 19, 2026 | Sheet 392 of 459

Power rail: PVCCIN_CPU0(8Phase)
Controller: XDPE192C4C
SPS:IFX TDA22594A/ MPS MP87290
VOUT: 1.83V / VBOOT: 1.8V
TDC : 212A
MAX : 398A
FSW = 800KHZ
SVID ADDR 00h/Bus0

PVCCIN CPU0 PH_3-4

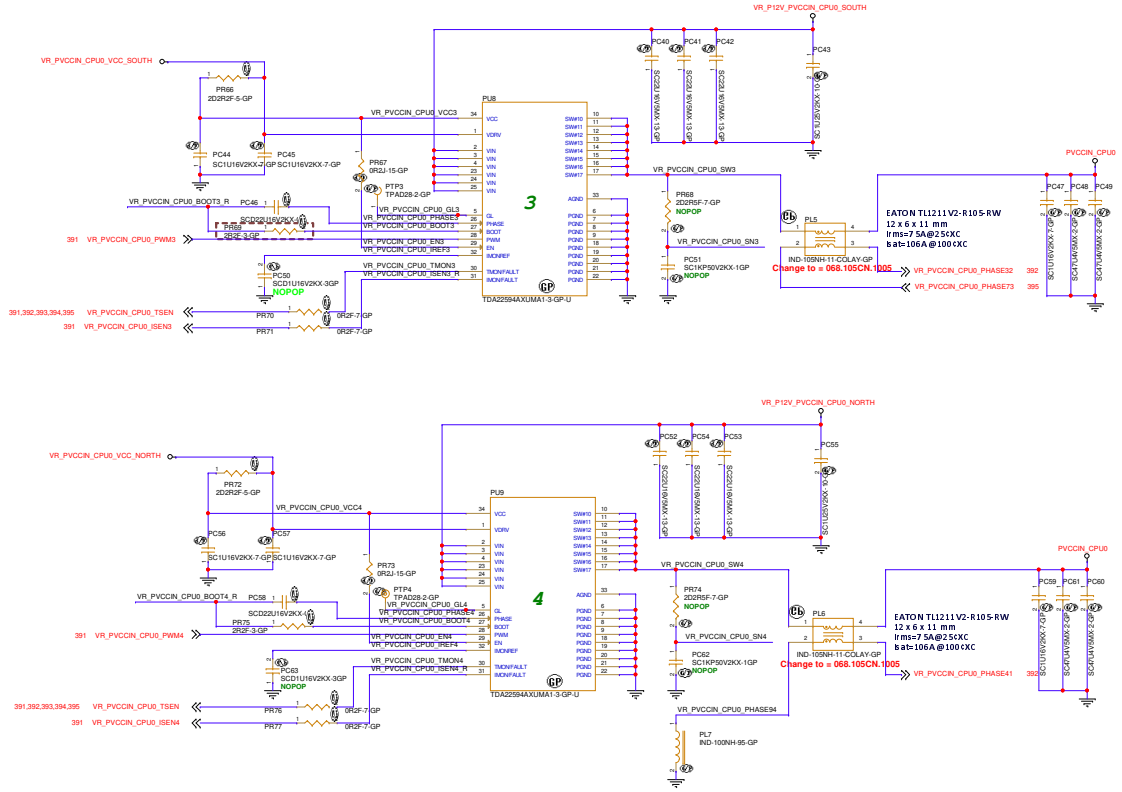

NVIDIA Corporation
2788 San Tomas Expressway
Santa Clara,CA 95051

Title: 0393_PVCCIN_CPU0_SPS2
Size: A2
Document Number: DGX Rubin NVL8 MB
Rev: SA
Date: Monday, January 19, 2026
Sheet 393 of 459

Power rail: PVCCIN_CPU0(8Phase)
Controller: XDPE192C4C
SPS:IFX TDA22594A/ MPS MP87290
VOUT: 1.83V / VBOOT: 1.8V
TDC : 212A
MAX : 398A
FSW = 800KHZ
SVID ADDR 00h/Bus0

PVCCIN CPU0 PH_5-6

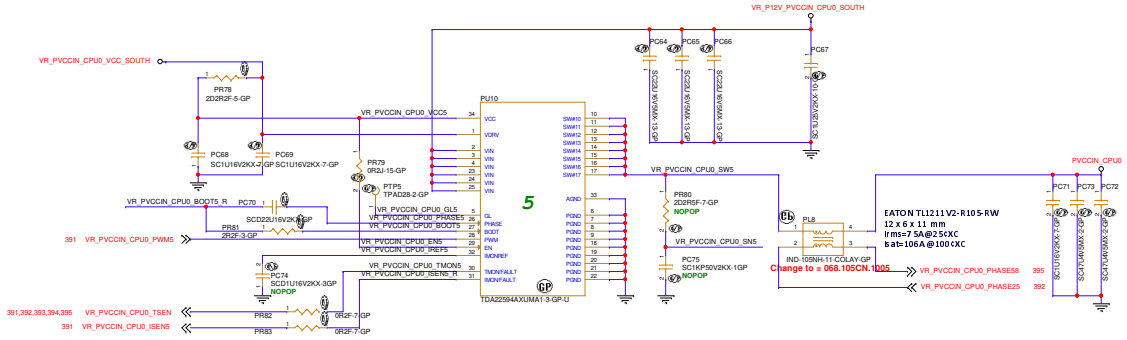

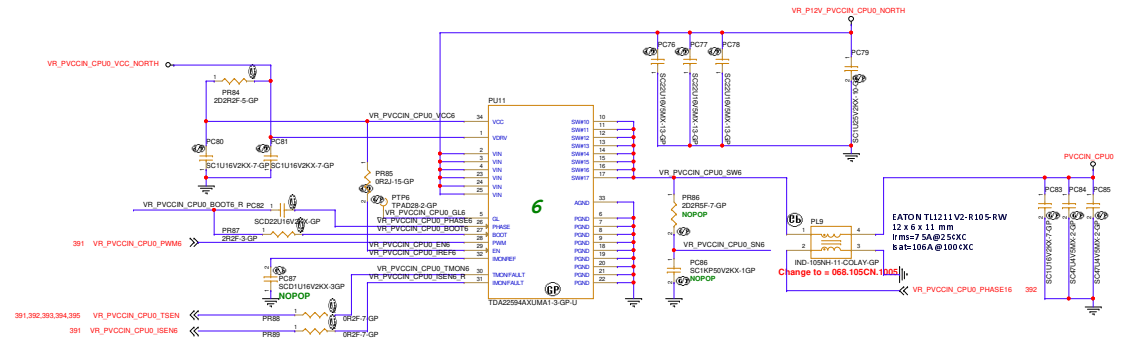

NVIDIA Corporation
2788 San Tomas Expressway
Santa Clara,CA 95051

Title: 0394_PVCCIN_CPU0_SPS3
Size: A2 | Document Number: DGX Rubin NVL8 MB | Rev: SA
Date: Monday, January 19, 2026 | Sheet 394 of 459

Power rail: PVCCIN_CPU0(8Phase)
Controller: XDPE192C4C
SPS:IFX TDA22594A/ MPS MP87290
VOUT: 1.83V / VBOOT: 1.8V
TDC : 212A
MAX : 398A
FSW = 800KHZ
SVID ADDR 00h/Bus0

PVCCIN CPU0 PH_7-8

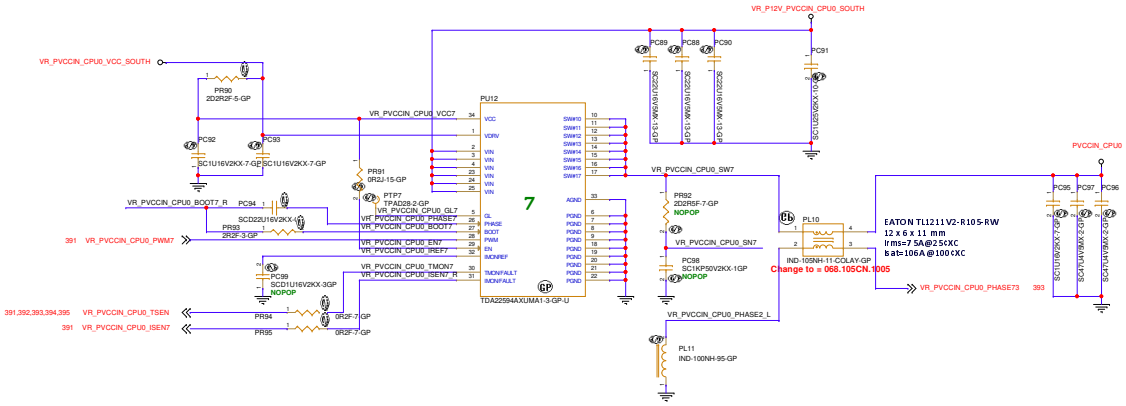

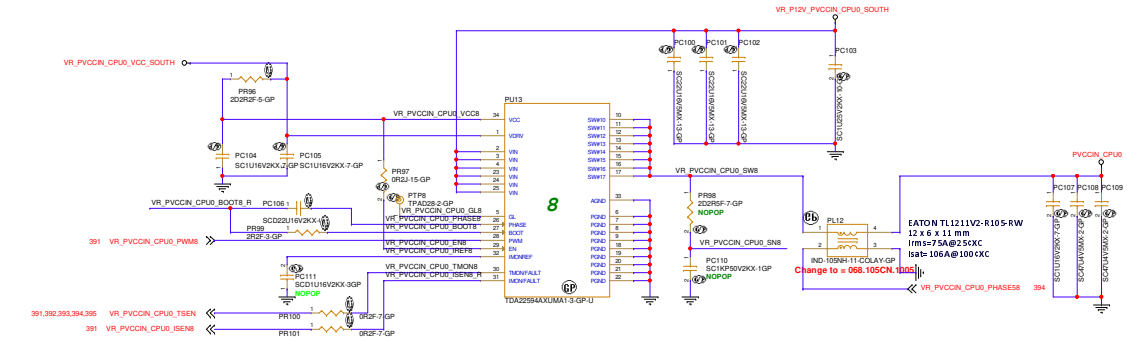

NVIDIA Corporation
2788 San Tomas Expressway
Santa Clara,CA 95051

Title: 0395_PVCCIN_CPU0_SPS4
Size: A2 | Document Number: DGX Rubin NVL8 MB | Rev: SA
Date: Monday, January 19, 2026 | Sheet 395 of 459

Power rail: PVCCFA_EHV_FIVRA_CPU0(2Phase)
Controller XDPE192C4C
VOUT: 1.8V / VBOOT: 1.8V
TDC : 57A
PEAK : 57A
FSW = 1000KHZ
SVID ADDR 03h/Bus0

PVCCFA_EHV_FIVRA_CPU0 PH_1-2

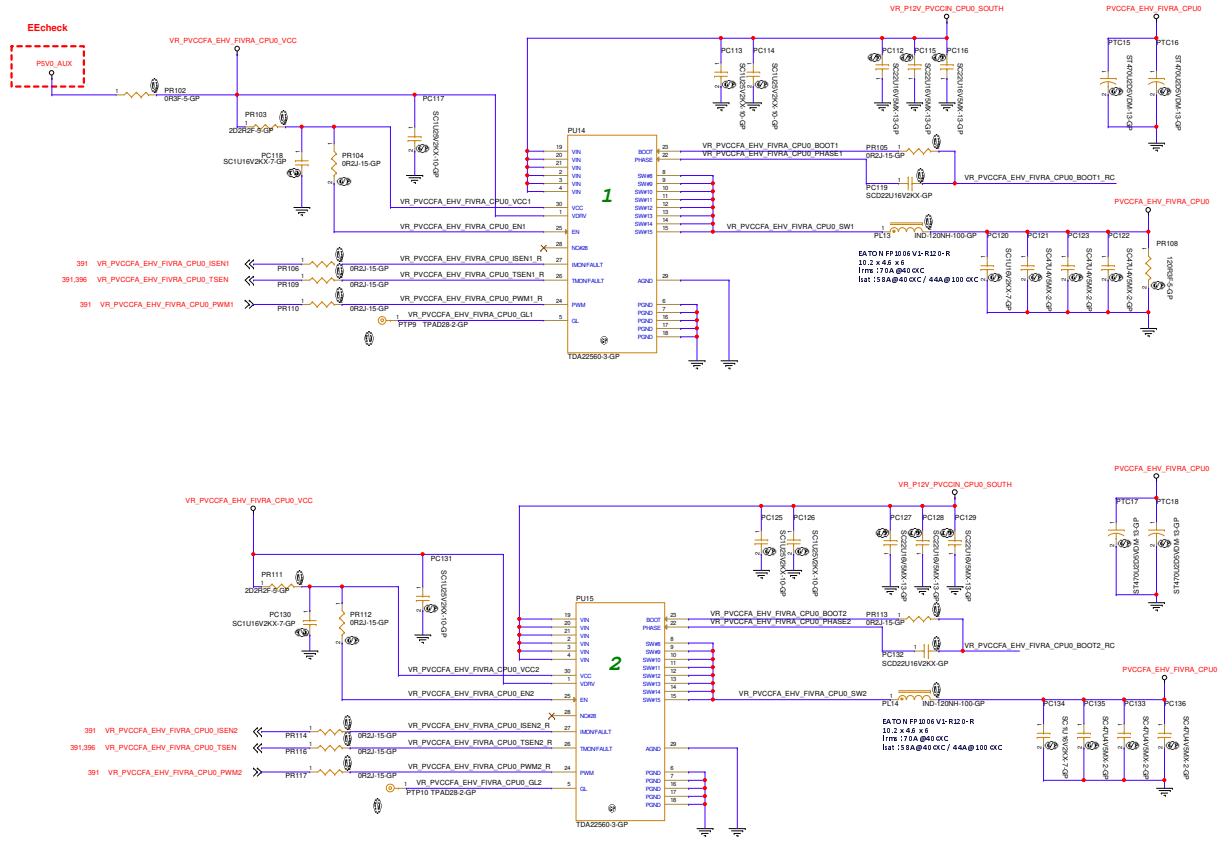

NVIDIA Corporation
2788 San Tomas Expressway
Santa Clara,CA 95051

Title: 0396_PVCCFA_FIVRA CPU0 PH_1-2
Size: A2
Document Number: DGX Rubin NVL8 MB
Rev: SA
Date: Monday, January 19, 2026
Sheet 396 of 459

NVIDIA Corporation
2788 San Tomas Expressway
Santa Clara,CA 95051

Title: 0397_UNTITLED

Size: A2 | Document Number: DGX Rubin NVL8 MB | Rev: SA

Date: Monday, January 19, 2026 | Sheet 397 of 459

NVIDIA Corporation
2788 San Tomas Expressway
Santa Clara,CA 95051

Title
0398_UNTITLED

Size A2 | Document Number DGX Rubin NVL8 MB | Rev SA

Date: Monday, January 19, 2026 | Sheet 398 of 459

NVIDIA Corporation
2788 San Tomas Expressway
Santa Clara,CA 95051

Title
0399_UNTITLED

Size A2 | Document Number DGX Rubin NVL8 MB | Rev SA

Date: Monday, January 19, 2026 | Sheet 399 of 459

NVIDIA Corporation
2788 San Tomas Expressway
Santa Clara,CA 95051

Title
0400_UNTITLED

Size A2 | Document Number DGX Rubin NVL8 MB | Rev SA

Date: Monday, January 19, 2026 | Sheet 400 of 459

NVIDIA Corporation
2788 San Tomas Expressway
Santa Clara,CA 95051

Title
0401_UNTITLED

Size A2 | Document Number DGX Rubin NVL8 MB | Rev SA

Date: Monday, January 19, 2026 | Sheet 401 of 459

Power rail: PVCCINF_CPU0 (2phase)
Controller: XDPE15284D
VOUT: 0.85V / VBOOT : 0.85V
TDC : 53A
PEAK : 55A
FSW = 1000KHZ
SVID ADDR 01h/Bus0

Power rail: PVCCFA_EHV_CPU0 (1phase)
Controller: XDPE15284D
VOUT: 1.8V / VBOOT : 1.8V
TDC : 4.7A
PEAK : 4.7A
FSW = 1200KHZ
SVID ADDR 02h/Bus0

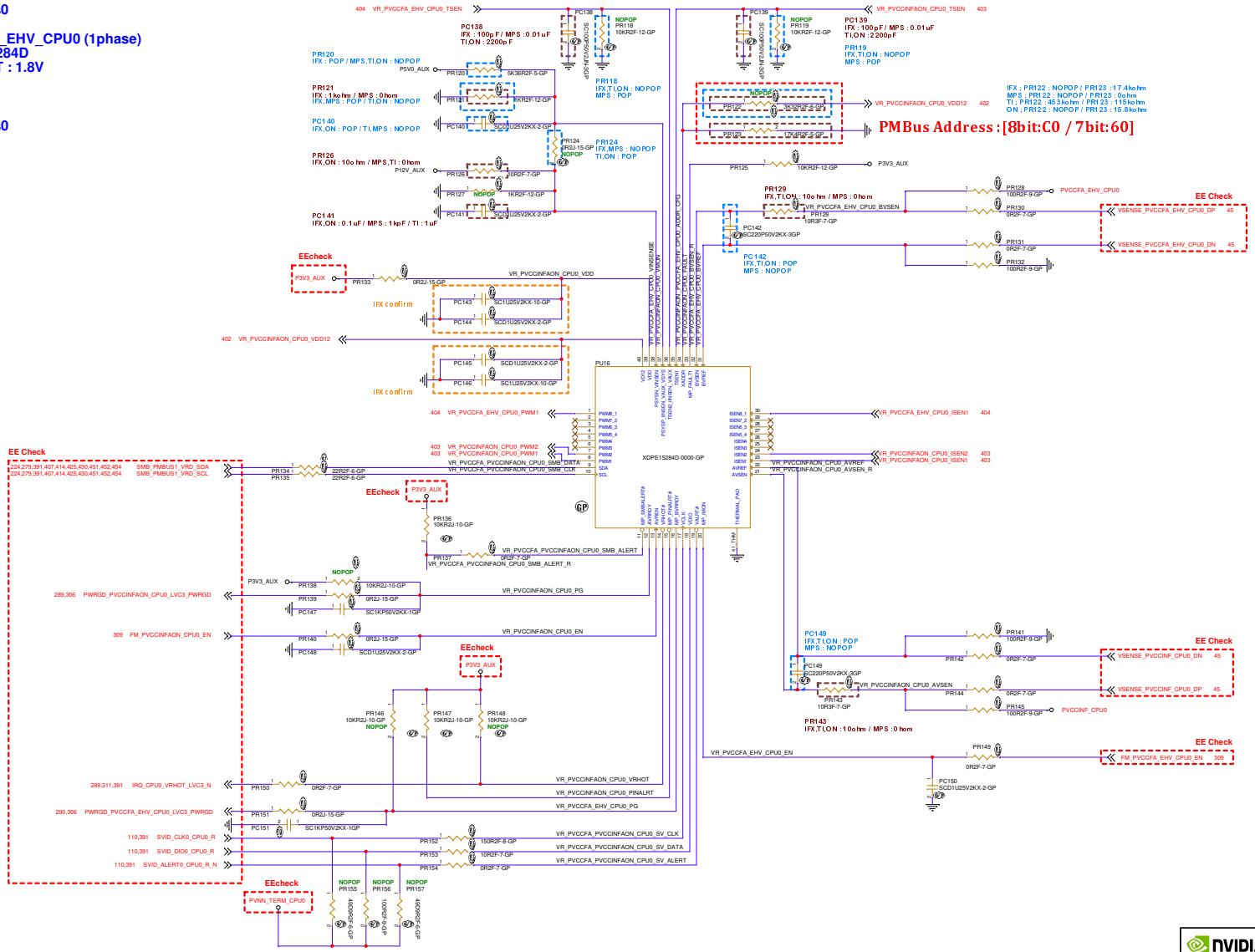

NVIDIA Corporation
2788 San Tomas Expressway
Santa Clara,CA 95051

Title: 0402_VCCINF/EHV CPU0 Master

Size: A2 | Document Number: DGX Rubin NVL8 MB | Rev: SA

Date: Monday, January 19, 2026 | Sheet 402 of 459

Power rail: PVCCINF_CPU0 (2phase)
Controller: XDPE15284D
SPS:IFX TDA22560/ MPS MP87270
VOUT: 0.85V / VBOOT : 0.85V
TDC : 53A
PEAK : 55A
FSW = 800KHZ
SVID ADDR 01h/Bus0

PVCCINF_CPU0 PH_1-2

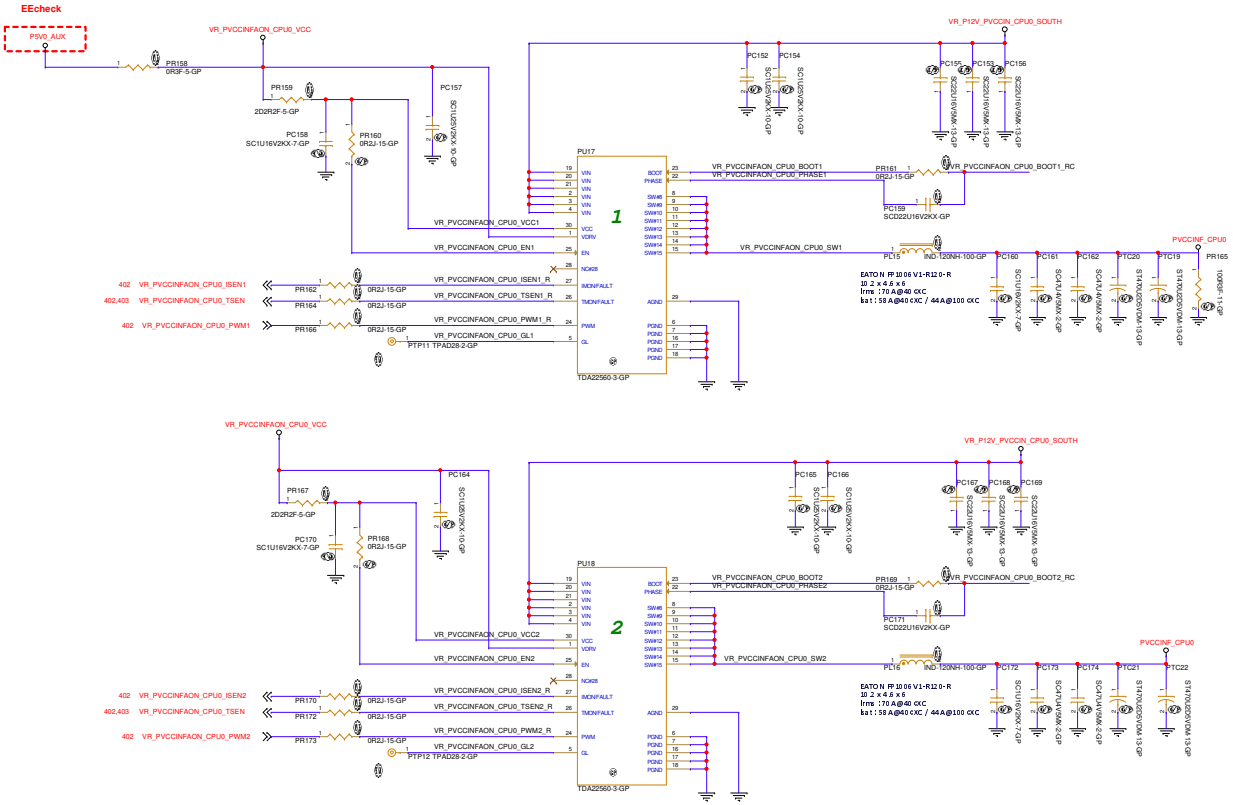

NVIDIA Corporation
2788 San Tomas Expressway
Santa Clara,CA 95051

Title: 0403_VCCINF CPU0 PH_1-2
Size: A2
Document Number: DGX Rubin NVL8 MB
Rev: SA
Date: Monday, January 19, 2026
Sheet 403 of 459

Power rail: PVCCFA_EHV_CPU0 (1phase)
Controller: XDPE15284D
SPS:IFX TDA22560/ MPS MP87270
VOUT: 1.8V / VBOOT : 1.8V
TDC : 4.7A
PEAK : 4.7A
FSW = 1200KHZ
SVID ADDR 02h/Bus0

PVCCFA_EHV CPU0 PH_1

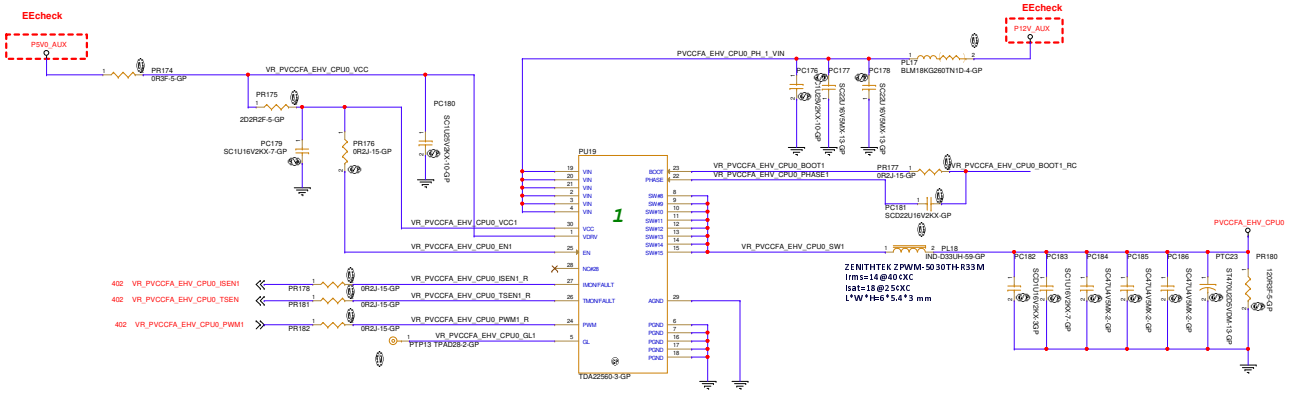

NVIDIA Corporation
2788 San Tomas Expressway
Santa Clara,CA 95051

Title: 0404_PVCCFA_EHV CPU0 PH_1
Size: A2
Document Number: DGX Rubin NVL8 MB
Rev: SA
Date: Monday, January 19, 2026
Sheet 404 of 459

NVIDIA Corporation
2788 San Tomas Expressway
Santa Clara,CA 95051

Title
0405_UNTITLED

Size A2 | Document Number DGX Rubin NVL8 MB | Rev SA

Date: Monday, January 19, 2026 | Sheet 405 of 459

NVIDIA Corporation
2788 San Tomas Expressway
Santa Clara,CA 95051

Title: 0406_UNTITLED

Size: A2 | Document Number: DGX Rubin NVL8 MB | Rev: SA

Date: Monday, January 19, 2026 | Sheet 406 of 409

Power rail: PVCCD0_HV_CPU0 (1phase)
Controller: XDPE15284D
VOUT: 1.1V / VBOOT : 1.1V
TDC : 27A
PEAK : 27.5A
FSW = 1000KHZ
SVID ADDR 00h/Bus1

Power rail: PVCCD1_HV_CPU0 (1phase)
Controller: XDPE15284D
VOUT: 1.1V / VBOOT : 1.1V
TDC : 27A
PEAK : 27.5A
FSW = 1000KHZ
SVID ADDR 01h/Bus1

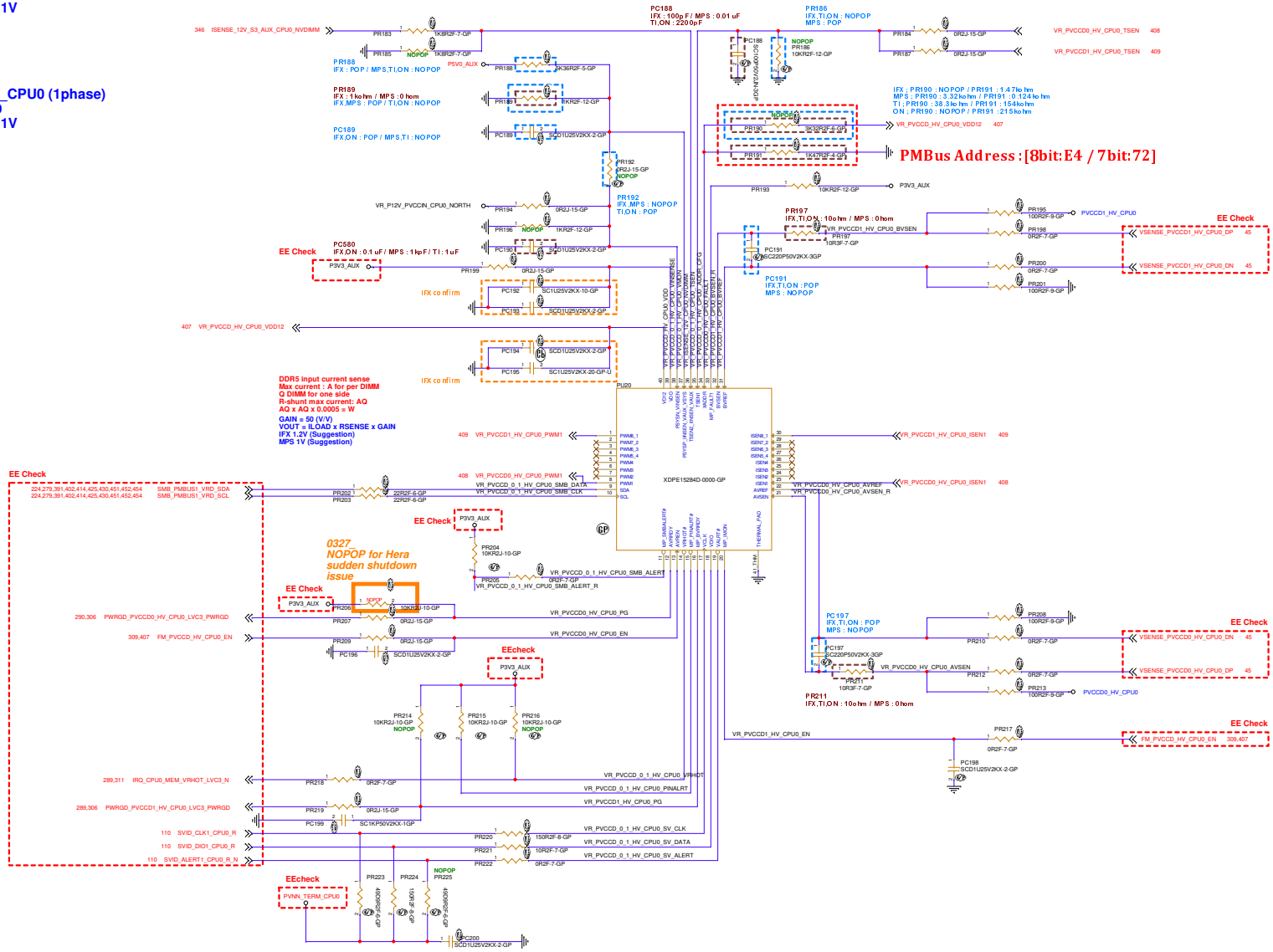

NVIDIA Corporation
2788 San Tomas Expressway
Santa Clara,CA 95051

Title: 0407_PVCCD0/1_HV_CPU0 Master

Size: A2 | Document Number: DGX Rubin NVL8 MB | Rev: SA

Date: Monday, January 19, 2026 | Sheet 407 of 459

Power rail: PVCCD0_HV_CPU0 (1phase)
Controller: XDPE15284D
SPS: IFX TDA22560/ MPS MP87270
VOUT: 1.1V / VBOOT : 1.1V
TDC : 27A
PEAK : 27.5A
FSW = 1000KHZ
SVID ADDR 00h/Bus1

PVCCD0_HV_CPU0 PH_1

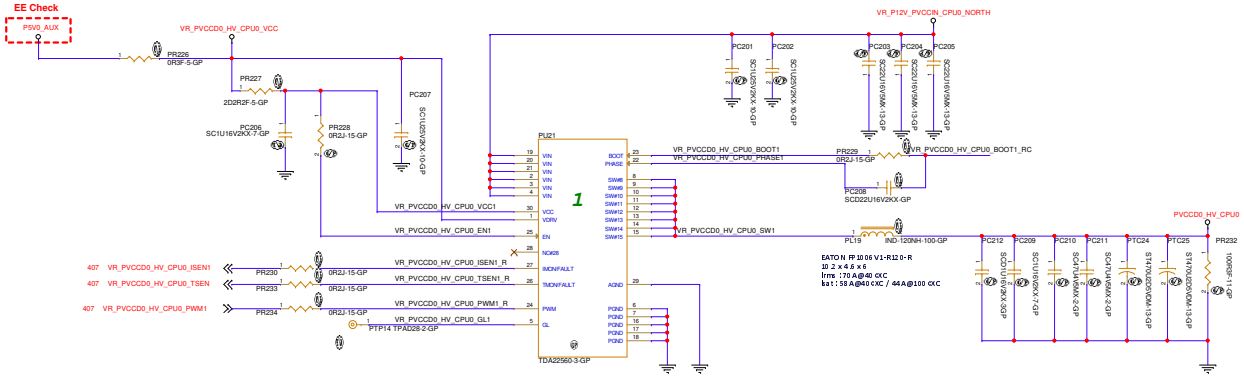

NVIDIA Corporation
2788 San Tomas Expressway
Santa Clara,CA 95051

Title: 0408_PVCCD0_HV_CPU0 PH_1
Size: A2
Document Number: DGX Rubin NVL8 MB
Rev: SA
Date: Monday, January 19, 2026
Sheet 408 of 459

Power rail: PVCCD1_HV_CPU0 (1phase)
Controller: XDPE15284D
SPS: IFX TDA22560/ MPS MP87270
VOUT: 1.1V / VBOOT : 1.1V
TDC : 27A
PEAK : 27.5A
FSW = 1000KHZ
SVID ADDR 01h/Bus1

PVCCD1_HV_CPU0 PH_1

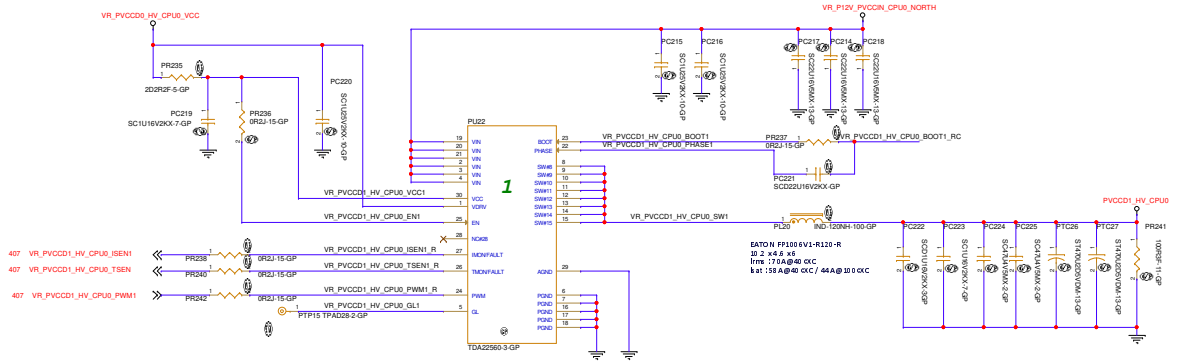

NVIDIA Corporation
2788 San Tomas Expressway
Santa Clara,CA 95051

Title: 0409_PVCCD1_HV_CPU0 PH_1
Size: A2
Document Number: DGX Rubin NVL8 MB
Rev: SA
Date: Monday, January 19, 2026
Sheet 409 of 459

Power rail: PVNN_MAIN_CPU0
Controller: MPQ8633B
VOUT: 1V
TDC : 5.5A
PEAK : 6.5A
OCP : 10A
FSW = 1000KHZ

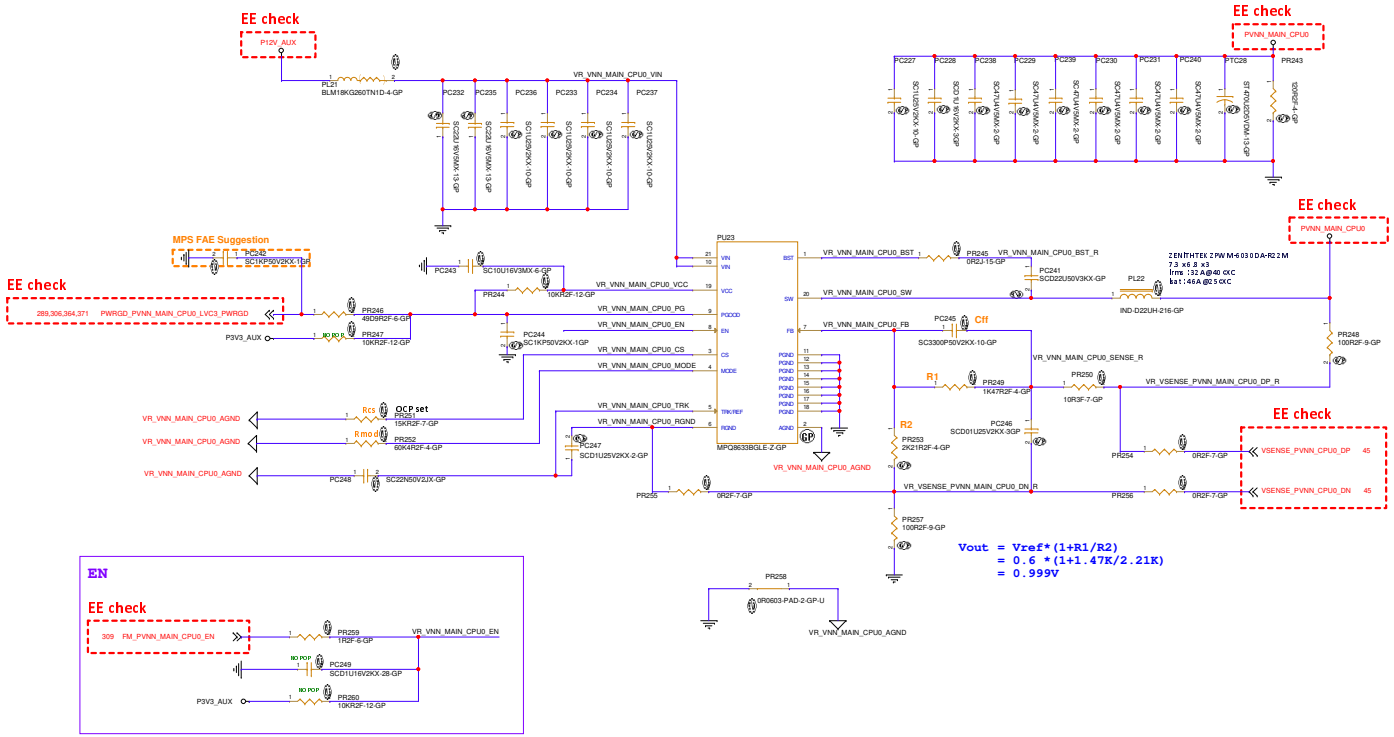

NVIDIA Corporation
2788 San Tomas Expressway
Santa Clara,CA 95051

Title: 0410_PVNN_MAIN CPU0

Size: A2 | Document Number: DGX Rubin NVL8 MB | Rev: SA

Date: Monday, January 19, 2026 | Sheet 410 of 459

Power rail: PVCC3V3_AUX_CPU0
VOUT = 3.3V
IOUT= 0.25A
OCP : 2 A ~ 5.5 A (Current Limit)

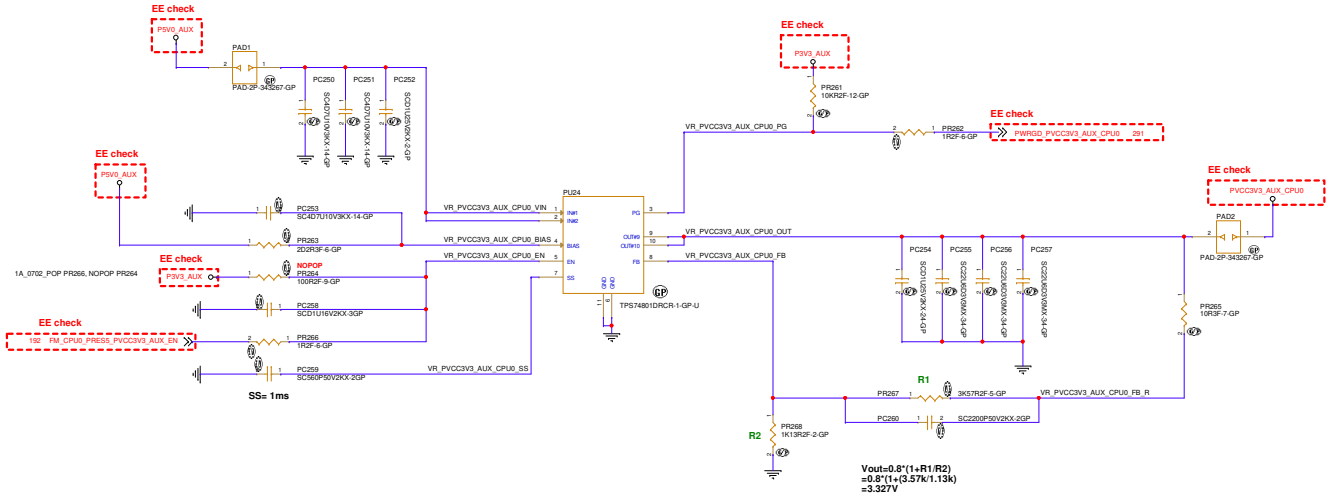

NVIDIA Corporation
2788 San Tomas Expressway
Santa Clara,CA 95051

Title: 0411_PVCC3V3_AUX_CPU0_TPS74801

Size: A2 | Document Number: DGX Rubin NVL8 MB | Rev: SA

Date: Monday, January 19, 2026 | Sheet 411 of 459

NVIDIA Corporation
2788 San Tomas Expressway
Santa Clara,CA 95051

Title
0412_UNTITLED

Size A2 | Document Number DGX Rubin NVL8 MB | Rev SA

Date: Monday, January 19, 2026 | Sheet 412 of 459

Power rail: PVCCIN_CPU1(8Phase)
Controller: XDPE192C4C
VOUT: 1.83V / VBOOT: 1.8V
TDC : 212A
MAX : 398A
FSW = 800KHZ
SVID ADDR 00h/Bus0

Power rail: PVCCFA_EHV_FIVRA_CPU1(2Phase)
Controller XDPE192C4C
VOUT: 1.8V / VBOOT: 1.8V
TDC : 57A
PEAK : 57A
FSW = 1000KHZ
SVID ADDR 03h/Bus0

Input filter for South

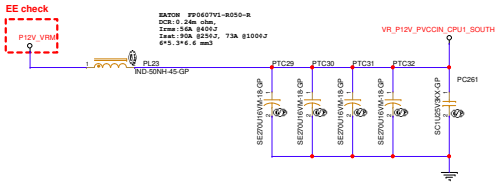

Input filter for North

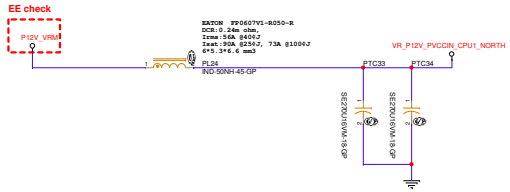

Output CAP North

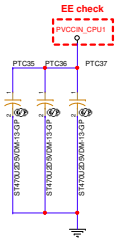

Output CAP South

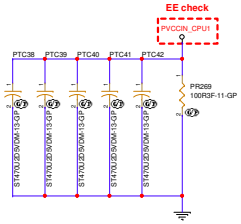

NVIDIA Corporation
2788 San Tomas Expressway
Santa Clara,CA 95051

Title: 0413_PVCCIN_CPU1_LC Filter

Size: A2 | Document Number: DGX Rubin NVL8 MB | Rev: SA

Date: Monday, January 19, 2026 | Sheet 413 of 459

Power rail: PVCCIN_CPU1(8Phase)
Controller: XDPE192C4C
VOUT: 1.83V / VBOOT: 1.8V
TDC : 212A
MAX : 398A
FSW = 800KHZ
SVID ADDR 00h/Bus0

Power rail: PVCCFA_EHV_FIVRA_CPU1(2Phase)
Controller XDPE192C4C
VOUT: 1.8V / VBOOT: 1.8V
TDC : 57A
PEAK : 57A
FSW = 1000KHZ
SVID ADDR 03h/Bus0

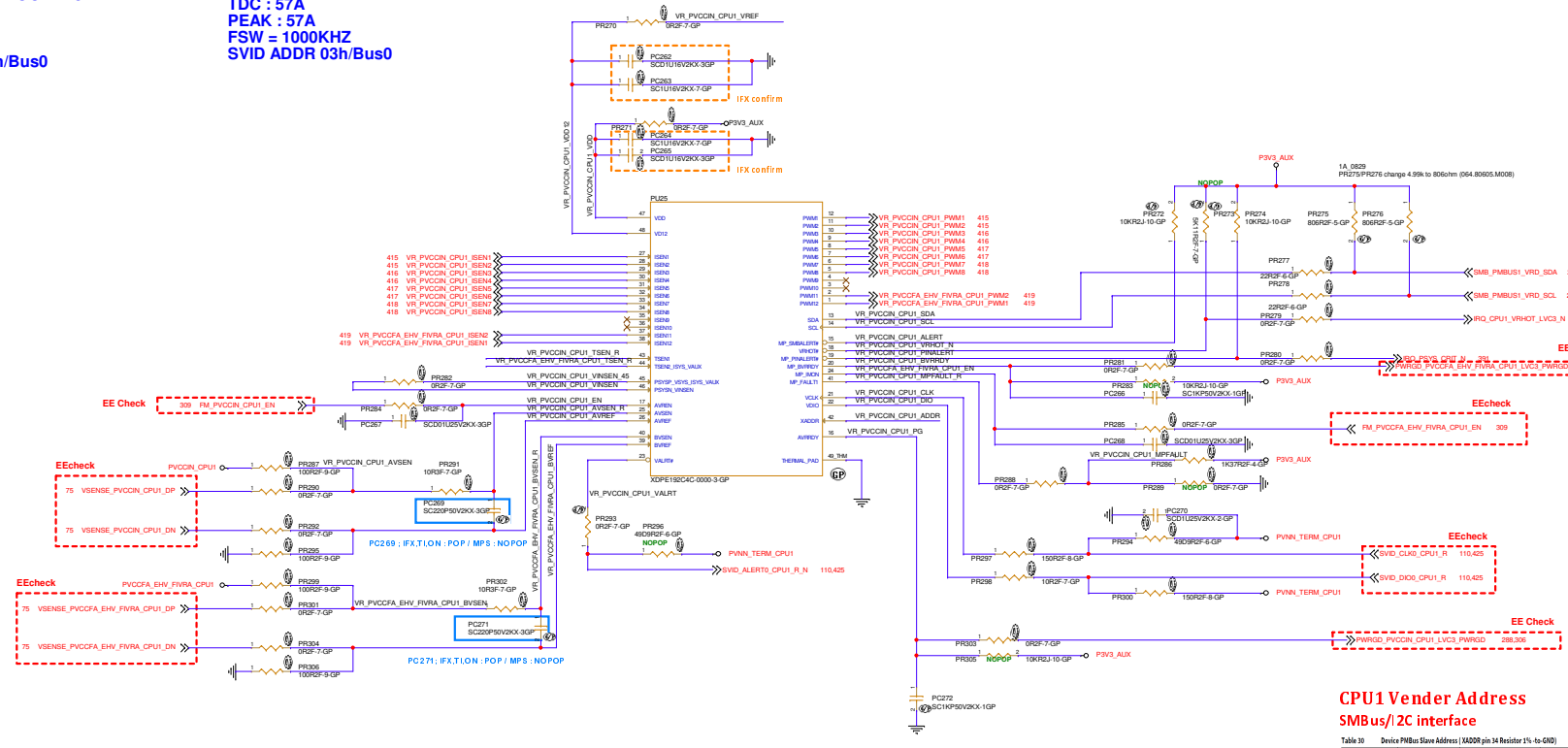

VIN Sense

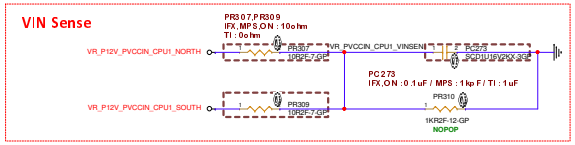

Power stage thermal sense

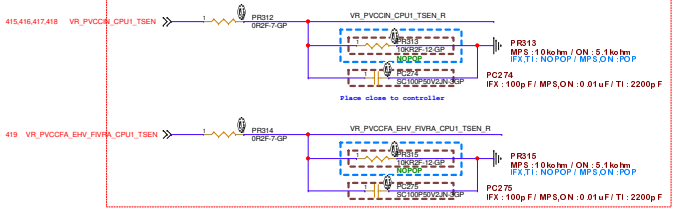

I2C Address: BC(8bit)/5E(7bit)

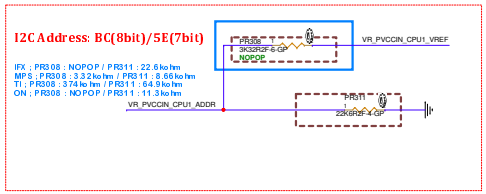

CPU1 Vender Address

SMBus/I2C interface

Table 30 Device PMBus Slave Address | XADDR pin 34 Resistor 1% -to-GND)

R_{XADDR}	Default address <7-bit Address>	Address Option1 (Offset Stride = 2)	Address Option2 (Offset Stride = 1)
≥ 49.9 kΩ	0x58	Stored 7-bit Base Address 0x08 – 0x77	Stored 7-bit Base Address 0x08 – 0x77
38.3 kΩ	0x5A	Base Addr + 2	Base Addr + 1
29.4 kΩ	0x5C	Base Addr + 4	Base Addr + 2
22.6 kΩ	0x5E	Base Addr + 6	Base Addr + 3
17.4 kΩ	0x60	Base Addr + 8	Base Addr + 4
13.3 kΩ	0x62	Base Addr + 10	Base Addr + 5
10.2 kΩ	0x64	Base Addr + 12	Base Addr + 6
7.87 kΩ	0x66	Base Addr + 14	Base Addr + 7
6.04 kΩ	0x68	Base Addr + 16	Base Addr + 8
4.64 kΩ	0x6A	Base Addr + 18	Base Addr + 9
3.57 kΩ	0x6C	Base Addr + 20	Base Addr + 10
2.67 kΩ	0x6E	Base Addr + 22	Base Addr + 11
2 kΩ	0x70	Base Addr + 24	Base Addr + 12
1.47 kΩ	0x72	Base Addr + 26	Base Addr + 13
1.07 kΩ	0x74	Base Addr + 28	Base Addr + 14
≤ 680 Ω	0x76	Base Addr + 30	Base Addr + 15

NVIDIA Corporation
2788 San Tomas Expressway
Santa Clara,CA 95051

Title: 0414_PVCCIN_CPU1_Master
Size: A2 | Document Number: DGX Rubin NVL8 MB | Rev: SA
Date: Monday, January 19, 2026 | Sheet 414 of 459

Power rail: PVCCIN_CPU1(8Phase)
Controller: XDPE192C4C
SPS:IFX TDA22594A/ MPS MP87290
VOUT: 1.83V / VBOOT: 1.8V
TDC : 212A
MAX : 398A
FSW = 800KHZ
SVID ADDR 00h/Bus0

PVCCIN CPU1 PH_1-2

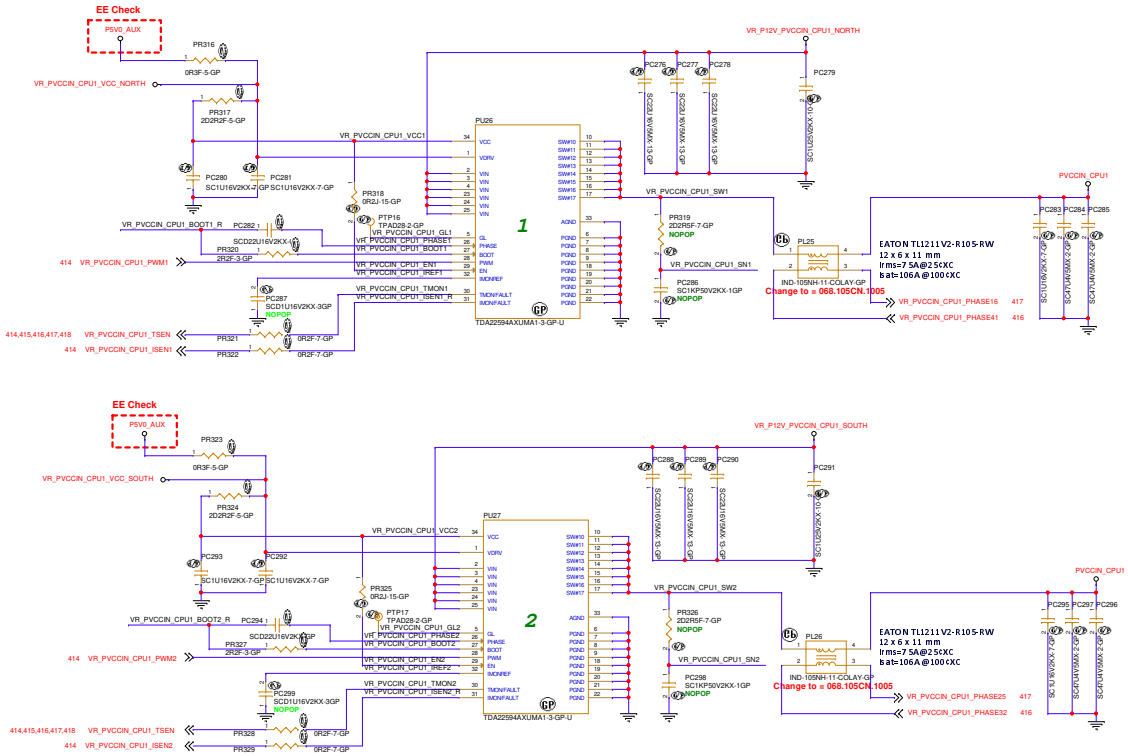

NVIDIA Corporation
2788 San Tomas Expressway
Santa Clara,CA 95051

Title: 0415_PVCCIN_CPU1_SPS1
Size: A2
Document Number: DGX Rubin NVL8 MB
Rev: SA
Date: Monday, January 19, 2026
Sheet 415 of 459

Power rail: PVCCIN_CPU1(8Phase)
Controller: XDPE192C4C
SPS:IFX TDA22594A/ MPS MP87290
VOUT: 1.83V / VBOOT: 1.8V
TDC : 212A
MAX : 398A
FSW = 800KHZ
SVID ADDR 00h/Bus0

PVCCIN CPU1 PH_3-4

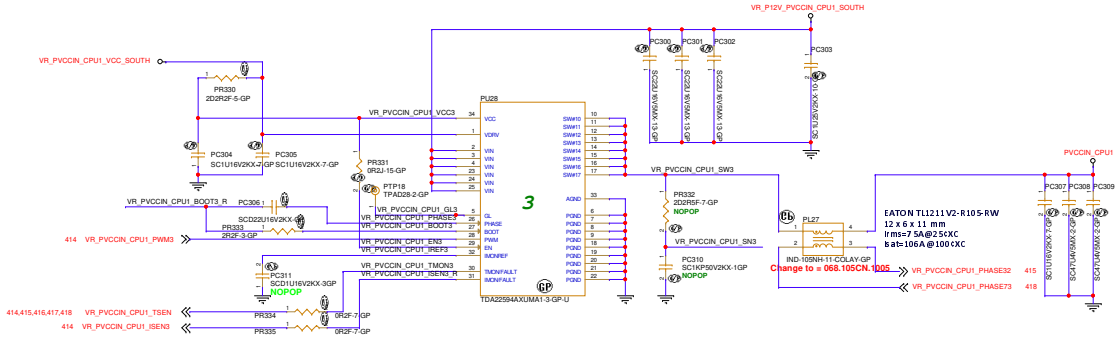

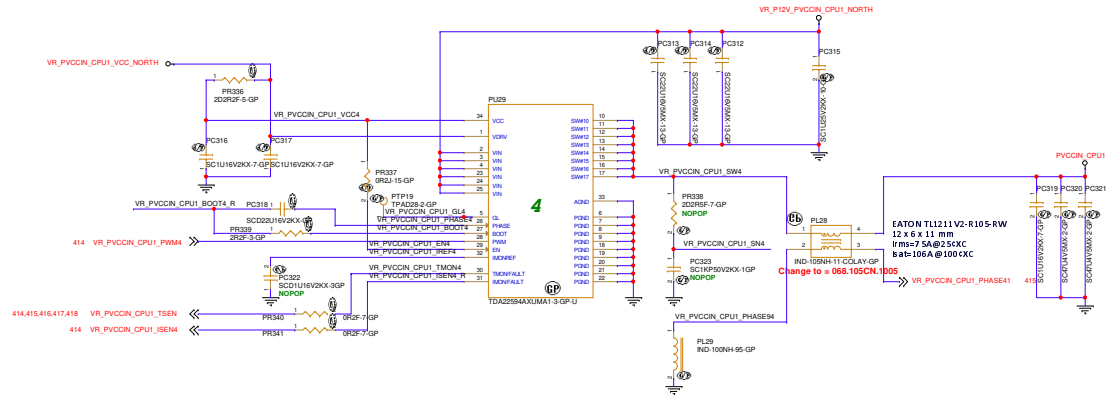

NVIDIA
NVIDIA Corporation
2788 San Tomas Expressway
Santa Clara,CA 95051

Title	0416_PVCCIN_CPU1_SPS2	
Size A2	Document Number DGX Rubin NVL8 MB	Rev SA
Date: Monday, January 19, 2026	Sheet 416 of 459	

Power rail: PVCCIN_CPU1(8Phase)
Controller: XDPE192C4C
SPS:IFX TDA22594A/ MPS MP87290
VOUT: 1.83V / VBOOT: 1.8V
TDC : 212A
MAX : 398A
FSW = 800KHZ
SVID ADDR 00h/Bus0

PVCCIN CPU1 PH_5-6

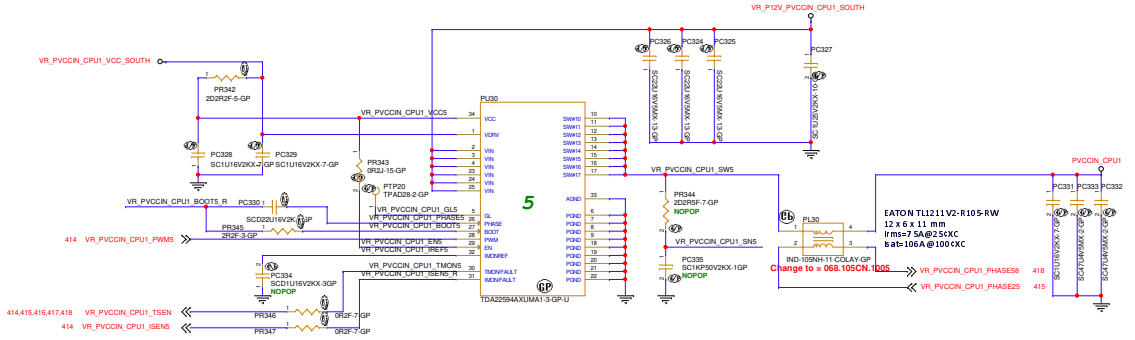

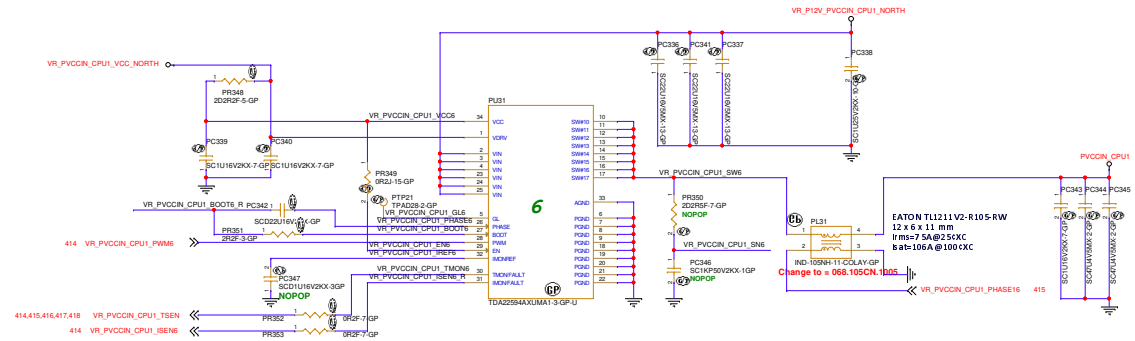

NVIDIA Corporation
2788 San Tomas Expressway
Santa Clara,CA 95051

Title: 0417_PVCCIN_CPU1_SPS3
Size: A2 | Document Number: DGX Rubin NVL8 MB | Rev: SA
Date: Monday, January 19, 2026 | Sheet 417 of 459

Power rail: PVCCIN_CPU1(8Phase)
Controller: XDPE192C4C
SPS:IFX TDA22594A/ MPS MP87290
VOUT: 1.83V / VBOOT: 1.8V
TDC : 212A
MAX : 398A
FSW = 800KHZ
SVID ADDR 00h/Bus0

PVCCIN CPU1 PH_7-8

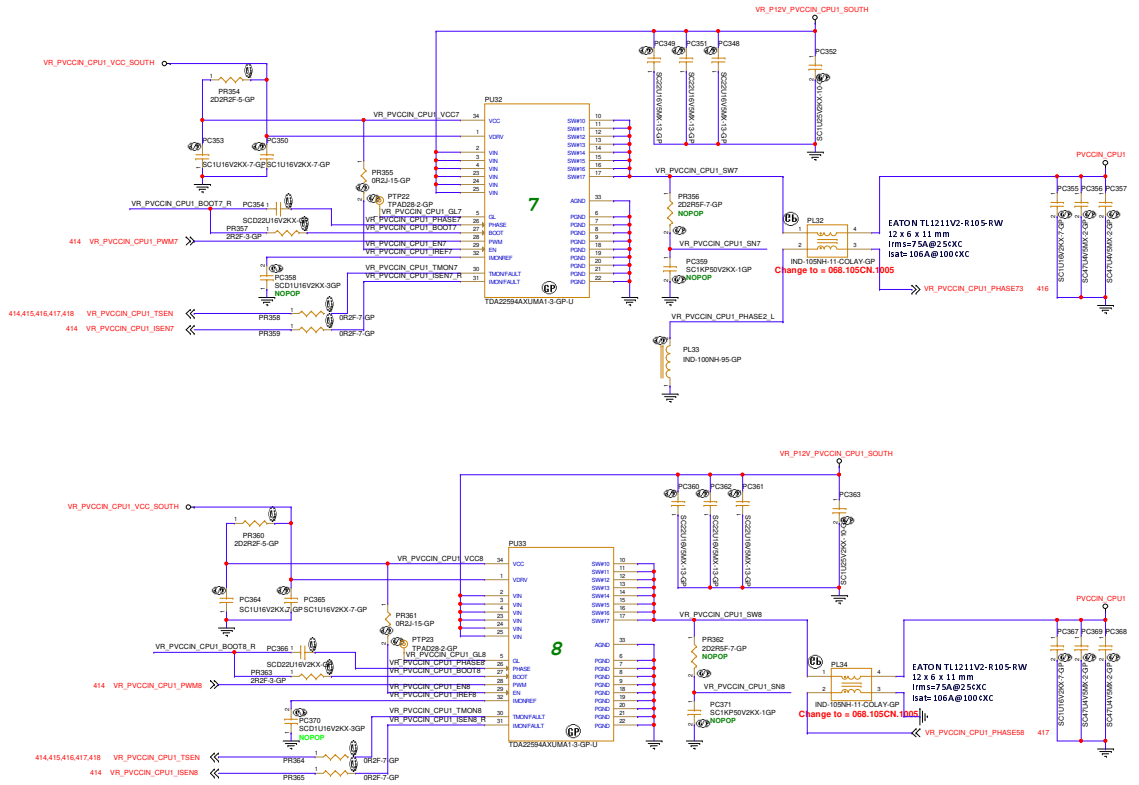

NVIDIA Corporation
2788 San Tomas Expressway
Santa Clara,CA 95051

Title: 0418_PVCCIN_CPU1_SPS4
Size: A2 | Document Number: DGX Rubin NVL8 MB | Rev: SA
Date: Monday, January 19, 2026 | Sheet 418 of 459

Power rail: PVCCFA_EHV_FIVRA_CPU1(2Phase)
Controller XDPE192C4C
VOUT: 1.8V / VBOOT: 1.8V
TDC : 57A
PEAK : 57A
FSW = 1000KHZ
SVID ADDR 03h/Bus0

PVCCFA_EHV_FIVRA_CPU1 PH_1-2

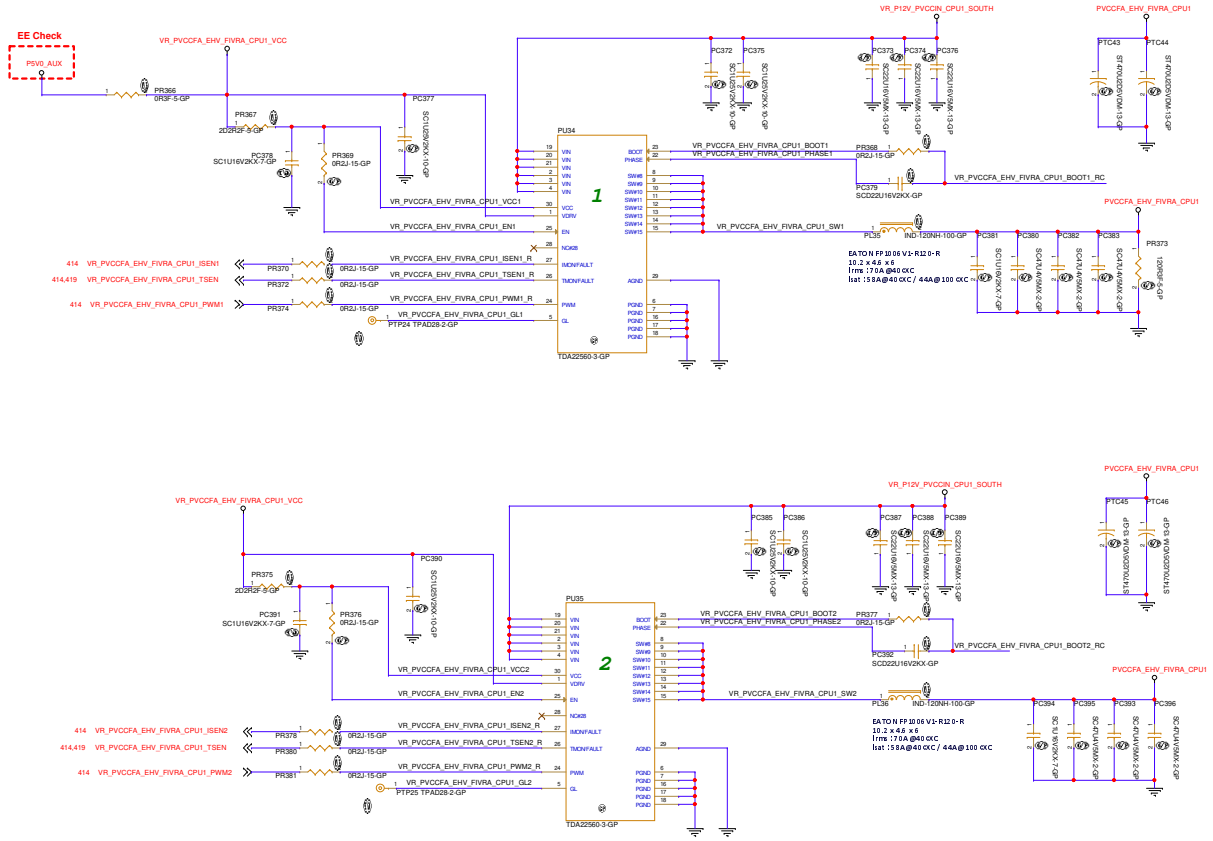

NVIDIA Corporation
2788 San Tomas Expressway
Santa Clara,CA 95051

Title: 0419_PVCCFA_FIVRA CPU1 PH_1-2
Size: A2 | Document Number: DGX Rubin NVL8 MB | Rev: SA
Date: Monday, January 19, 2026 | Sheet 419 of 459

NVIDIA Corporation
2788 San Tomas Expressway
Santa Clara,CA 95051

Title
0420_UNTITLED

Size A2 | Document Number DGX Rubin NVL8 MB | Rev SA

Date: Monday, January 19, 2026 | Sheet 420 of 459

NVIDIA Corporation
2788 San Tomas Expressway
Santa Clara,CA 95051

Title
0421_UNTITLED

Size A2 | Document Number DGX Rubin NVL8 MB | Rev SA

Date: Monday, January 19, 2026 | Sheet 421 of 459

NVIDIA Corporation
2788 San Tomas Expressway
Santa Clara,CA 95051

Title
0422_UNTITLED

Size A2 | Document Number DGX Rubin NVL8 MB | Rev SA

Date: Monday, January 19, 2026 | Sheet 422 of 459

NVIDIA Corporation
2788 San Tomas Expressway
Santa Clara,CA 95051

Title
0423_UNTITLED

Size A2 | Document Number DGX Rubin NVL8 MB | Rev SA

Date: Monday, January 19, 2026 | Sheet 423 of 459

NVIDIA Corporation
2788 San Tomas Expressway
Santa Clara,CA 95051

Title
0424_UNTITLED

Size A2 | Document Number DGX Rubin NVL8 MB | Rev SA

Date: Monday, January 19, 2026 | Sheet 424 of 459

Power rail: PVCCINF_CPU1 (2phase)
Controller: XDPE15284D
VOUT: 0.85V / VBOOT : 0.85V
TDC : 53A
PEAK : 55A
FSW = 1000KHZ
SVID ADDR 01h/Bus0

Power rail: PVCCFA_EHV_CPU1 (1phase)
Controller: XDPE15284D
VOUT: 1.8V / VBOOT : 1.8V
TDC : 4.7A
PEAK : 4.7A
FSW = 1200KHZ
SVID ADDR 02h/Bus0

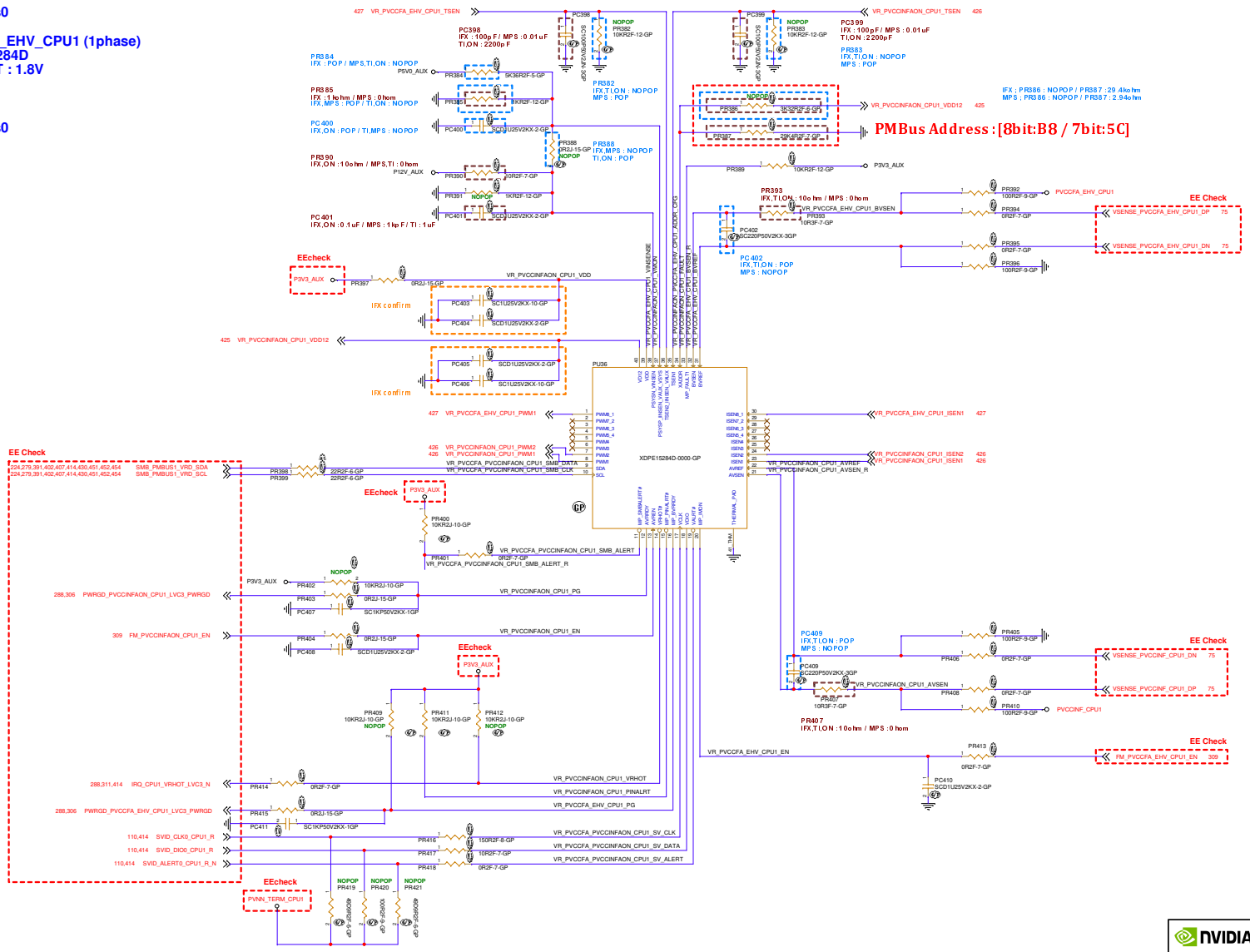

NVIDIA Corporation
2788 San Tomas Expressway
Santa Clara,CA 95051

Title: 0425_VCCINF/EHV CPU1 Master
Size: A2 | Document Number: DGX Rubin NVL8 MB | Rev: SA
Date: Monday, January 19, 2026 | Sheet 425 of 459

Power rail: PVCCINF_CPU1 (2phase)
Controller: XDPE15284D
SPS:IFX TDA22560/ MPS MP87270
VOUT: 0.85V / VBOOT : 0.85V
TDC : 53A
PEAK : 55A
FSW = 800KHZ
SVID ADDR 01h/Bus0

PVCCINF_CPU1 PH_1-2

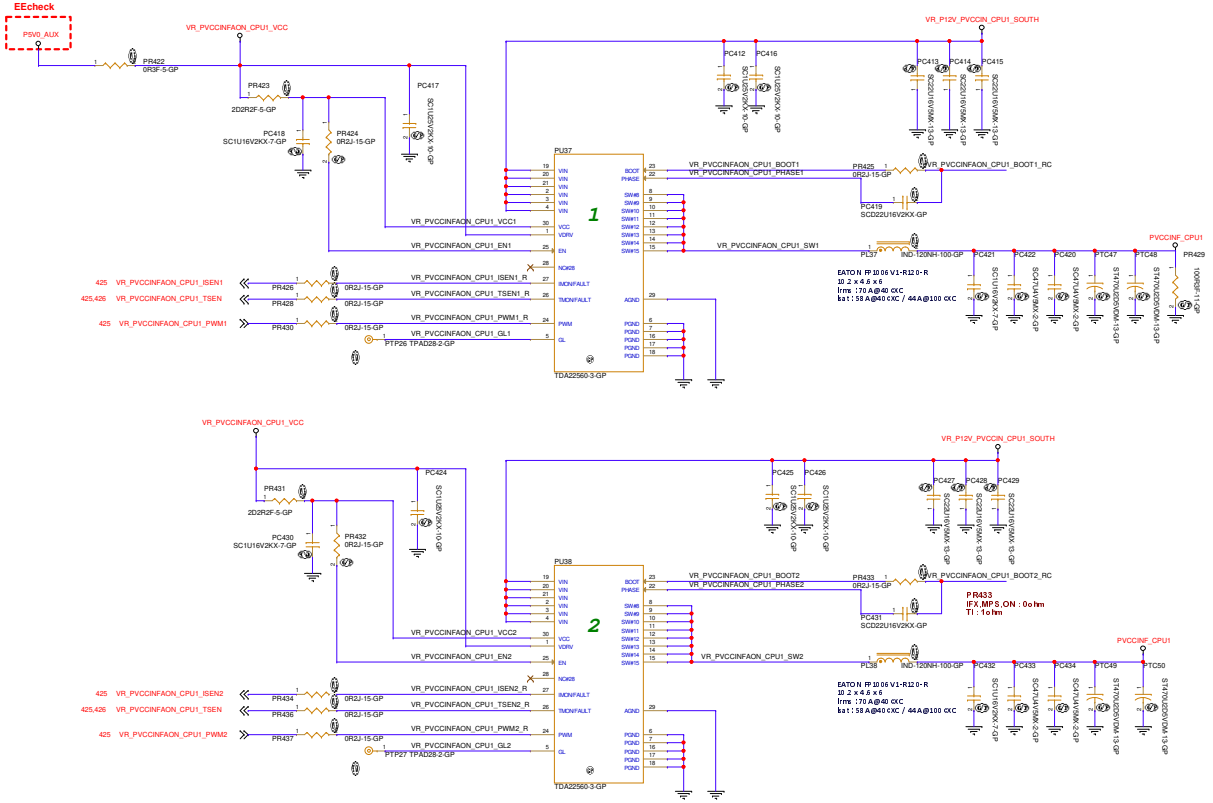

NVIDIA Corporation
2788 San Tomas Expressway
Santa Clara,CA 95051

Title: 0426_VCCINF CPU1 PH_1-2
Size: A2
Document Number: DGX Rubin NVL8 MB
Rev: SA
Date: Monday, January 19, 2026
Sheet 426 of 459

Power rail: PVCCFA_EHV_CPU1 (1phase)
Controller: XDPE15284D
SPS:IFX TDA22560/ MPS MP87270
VOUT: 1.8V / VBOOT : 1.8V
TDC : 4.7A
PEAK : 4.7A
FSW = 1200KHZ
SVID ADDR 02h/Bus0

PVCCFA_EHV CPU1 PH_1

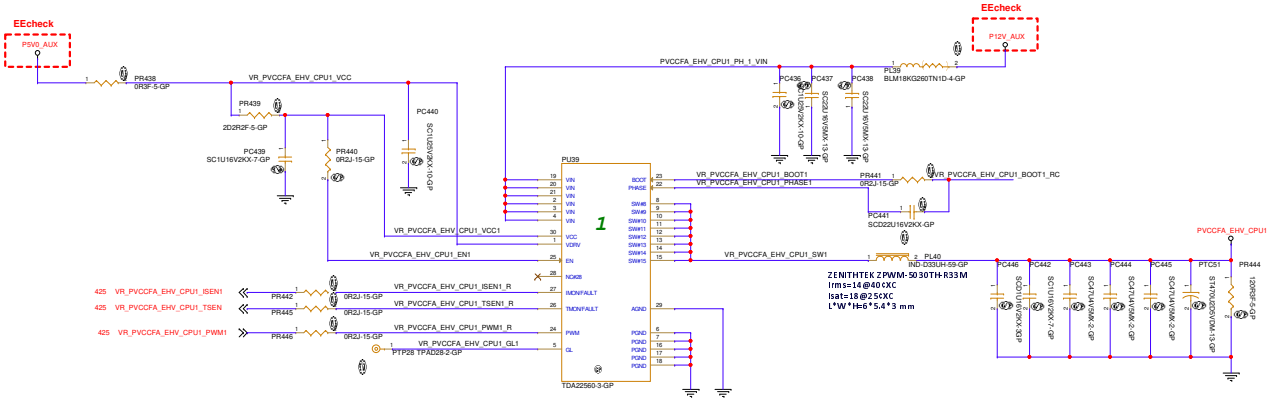

NVIDIA Corporation
2788 San Tomas Expressway
Santa Clara,CA 95051

Title: 0427_PVCCFA_EHV CPU1 PH_1

Size: A2 | Document Number: DGX Rubin NVL8 MB | Rev: SA

Date: Monday, January 19, 2026 | Sheet 427 of 459

NVIDIA Corporation
2788 San Tomas Expressway
Santa Clara,CA 95051

Title
0428_UNTITLED

Size A2 | Document Number DGX Rubin NVL8 MB | Rev SA

Date: Monday, January 19, 2026 | Sheet 428 of 459

NVIDIA Corporation
2788 San Tomas Expressway
Santa Clara,CA 95051

Title: 0429_UNTITLED

Size: A2 | Document Number: DGX Rubin NVL8 MB | Rev: SA

Date: Monday, January 19, 2026 | Sheet 429 of 459

Power rail: PVCCD0_HV_CPU1 (1phase)
Controller: XDPE15284D
VOUT: 1.1V / VBOOT : 1.1V
TDC : 27A
PEAK : 27.5A
FSW = 1000KHZ
SVID ADDR 00h/Bus1

Power rail: PVCCD1_HV_CPU1 (1phase)
Controller: XDPE15284D
VOUT: 1.1V / VBOOT : 1.1V
TDC : 27A
PEAK : 27.5A
FSW = 1000KHZ
SVID ADDR 01h/Bus1

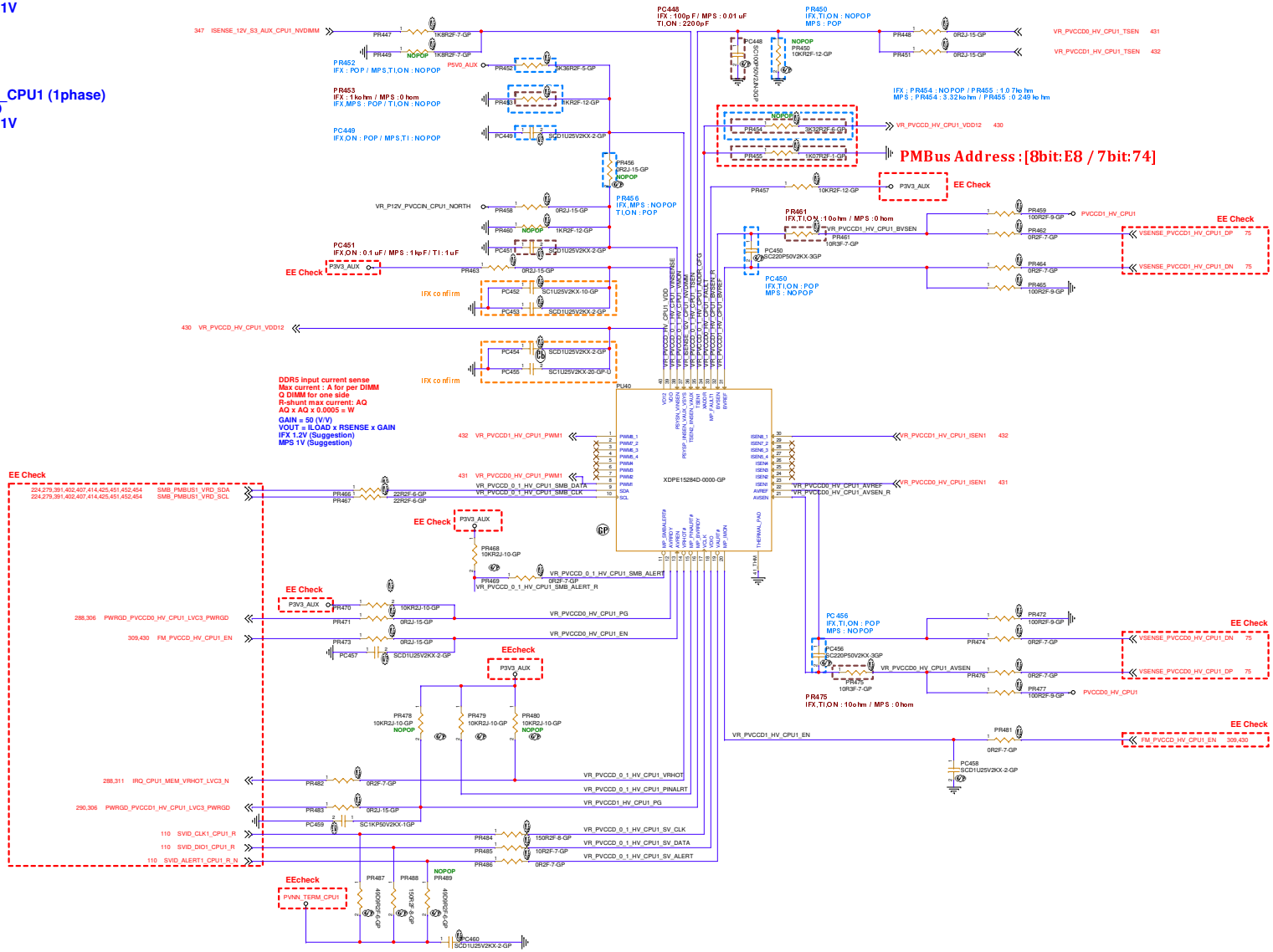

NVIDIA Corporation 2788 San Tomas Expressway Santa Clara,CA 95051	
Title	0430_PVCCD0/1_HV_CPU1 Master
Size A2	Document Number DGX Rubin NVL8 MB
Rev SA	
Date: Monday, January 19, 2026	Sheet 430 of 459

Power rail: PVCCD0_HV_CPU1 (1phase)
Controller: XDPE15284D
SPS: IFX TDA22560/ MPS MP87270
VOUT: 1.1V / VBOOT : 1.1V
TDC : 27A
PEAK : 27.5A
FSW = 1000KHZ
SVID ADDR 00h/Bus1

PVCCD0_HV_CPU1 PH_1

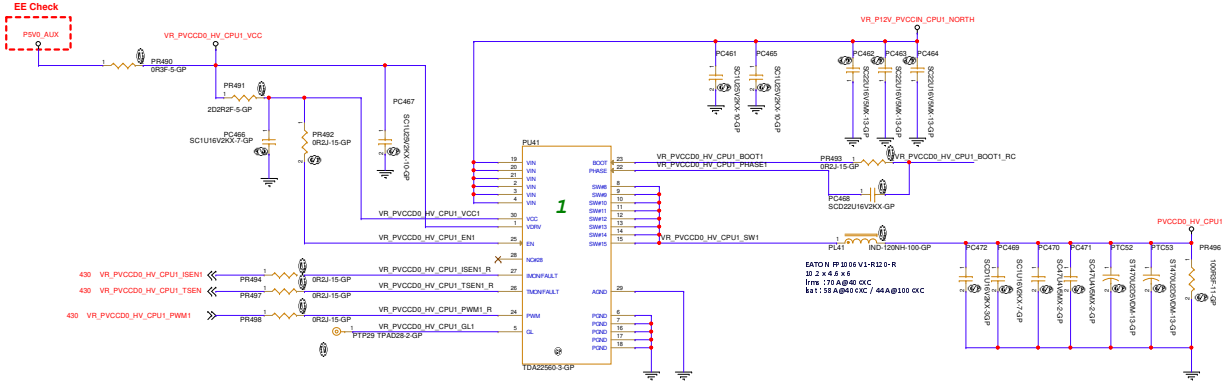

NVIDIA Corporation
2788 San Tomas Expressway
Santa Clara,CA 95051

Title: 0431_PVCCD0_HV_CPU1 PH_1
Size: A2
Document Number: DGX Rubin NVL8 MB
Rev: SA
Date: Monday, January 19, 2026
Sheet 431 of 459

EE check

Power rail: PVCCD1_HV_CPU1 (1phase)
Controller: XDPE15284D
SPS: IFX TDA22560/ MPS MP87270
VOUT: 1.1V / VBOOT : 1.1V
TDC : 27A
PEAK : 27.5A
FSW = 1000KHZ
SVID ADDR 01h/Bus1

PVCCD1_HV_CPU1 PH_1

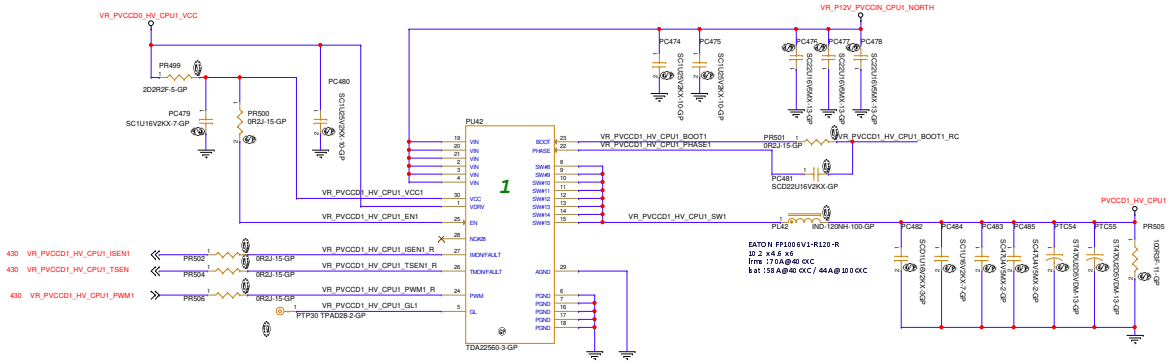

NVIDIA Corporation
2788 San Tomas Expressway
Santa Clara,CA 95051

Title: 0432_PVCCD1_HV_CPU1 PH_1
Size: A2
Document Number: DGX Rubin NVL8 MB
Rev: SA
Date: Monday, January 19, 2026
Sheet 432 of 459

Power rail: PVNN_MAIN_CPU1
Controller: MPQ8633B
VOUT: 1V
TDC : 5.5A
PEAK : 6.5A
OCP : 10A
FSW = 1000KHZ

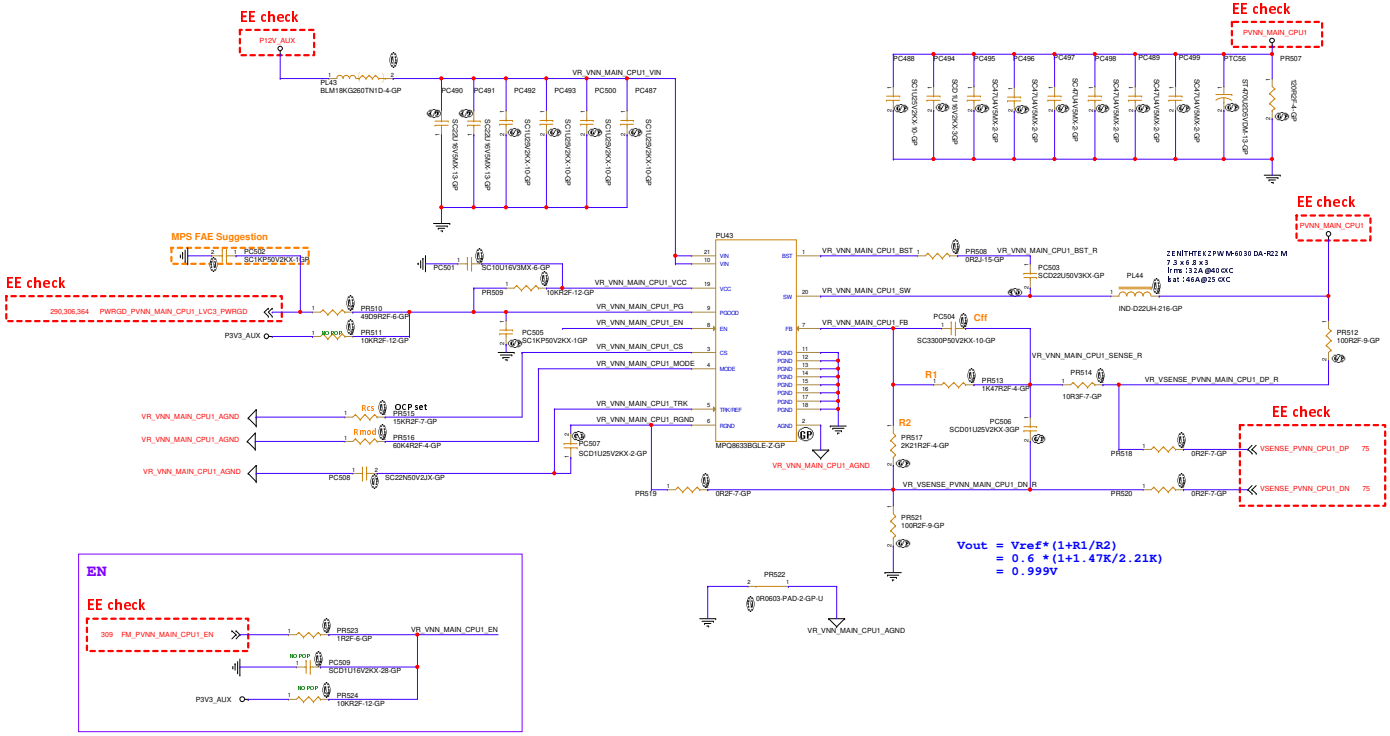

NVIDIA Corporation
2788 San Tomas Expressway
Santa Clara,CA 95051

Title: 0433_PVNN_MAIN CPU1
Size: A2
Document Number: DGX Rubin NVL8 MB
Rev: SA
Date: Monday, January 19, 2026
Sheet 433 of 459

Power rail: PVCC3V3_AUX_CPU1
VOUT = 3.3V
IOUT= 0.25A
OCP : 2 A ~ 5.5 A (Current Limit)

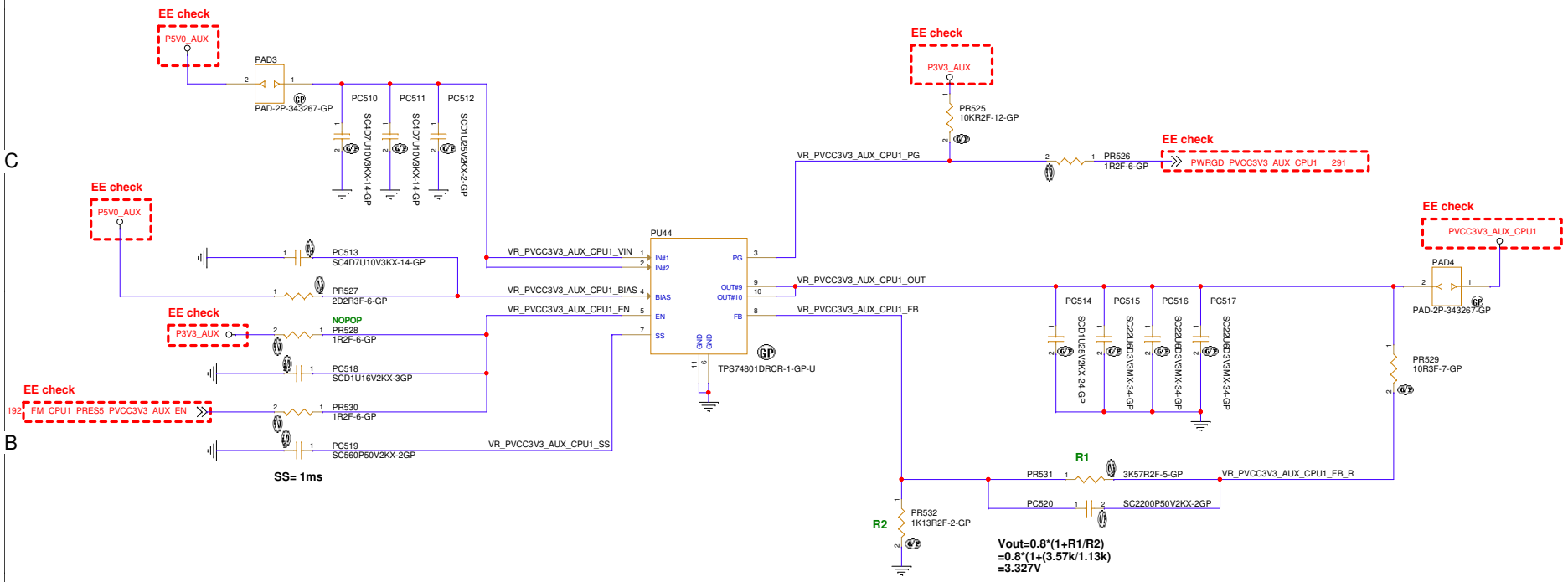

NVIDIA Corporation
2788 San Tomas Expressway
Santa Clara,CA 95051

Title: 0434_PVCC3V3_AUX_CPU1_TPS74801

Size: A3 | Document Number: DGX Rubin NVL8 MB | Rev: SA

Date: Monday, January 19, 2026 | Sheet 434 of 459

NVIDIA Corporation
2788 San Tomas Expressway
Santa Clara,CA 95051

Title
0435_UNTITLED

Size A3 | Document Number DGX Rubin NVL8 MB | Rev SA

Date: Monday, January 19, 2026 | Sheet 435 of 459

NVIDIA Corporation
2788 San Tomas Expressway
Santa Clara,CA 95051

Title
0436_----VR SYSTEM POWER-----

Size A3 | Document Number DGX Rubin NVL8 MB | Rev SA

Date: Monday, January 19, 2026 | Sheet 436 of 459

NVIDIA Corporation
2788 San Tomas Expressway
Santa Clara,CA 95051

Title
0437_UNTITLED

Size A3 | Document Number DGX Rubin NVL8 MB | Rev SA

Date: Monday, January 19, 2026 | Sheet 437 of 459

Power rail : P5V
Controller : MPQ8626
Frequency : 600 kHz
Vin: 12V
Vout: 5V
Max : 4 A
OCP: 4.932 A

NVIDIA Corporation
2788 San Tomas Expressway
Santa Clara,CA 95051

Title
0438_BLANK

Size A3 | Document Number DGX Rubin NVL8 MB | Rev SA

Date: Monday, January 19, 2026 | Sheet 438 of 459

Power rail : P3V3
Controller : MPQ8633BGLE-Z-GP
Fswitching: 600KHz
MAX : 17.452A
OCP : 21.6A

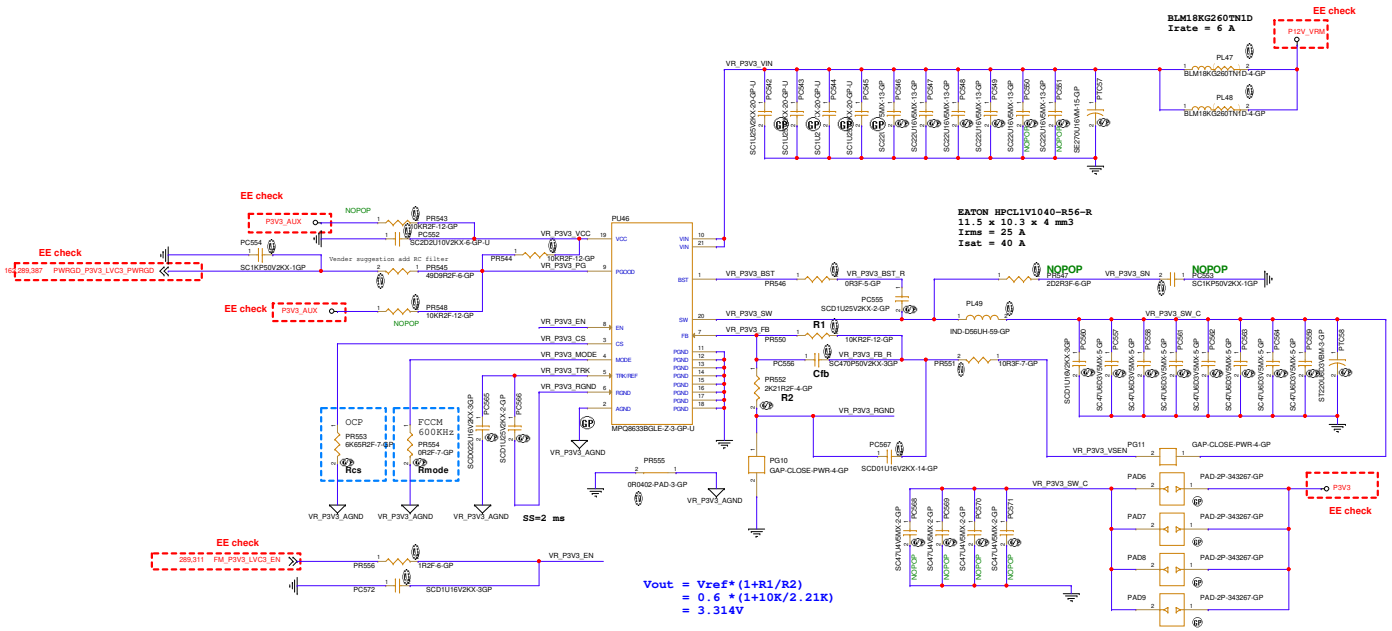

NVIDIA Corporation
2788 San Tomas Expressway
Santa Clara,CA 95051

Title: 0439_P3V3_MPQ8633B
Size: A2
Document Number: DGX Rubin NVL8 MB
Rev: SA
Date: Monday, January 19, 2026
Sheet 439 of 459

Power rail : P1V05
Controller : TPS74801
Vin: 3.3V
Vout: 1.1V
Max : 0.71A
OCP: 2 A

NVIDIA Corporation
2788 San Tomas Expressway
Santa Clara,CA 95051

Title
0440_BLANK

Size A3 | Document Number DGX Rubin NVL8 MB | Rev SA

Date: Monday, January 19, 2026 | Sheet 440 of 459

Power rail : P3V3_AUX
Controller : MPQ8633B
Frequency : 800 kHz
MAX :6.505 A
OCP : 12.71 A

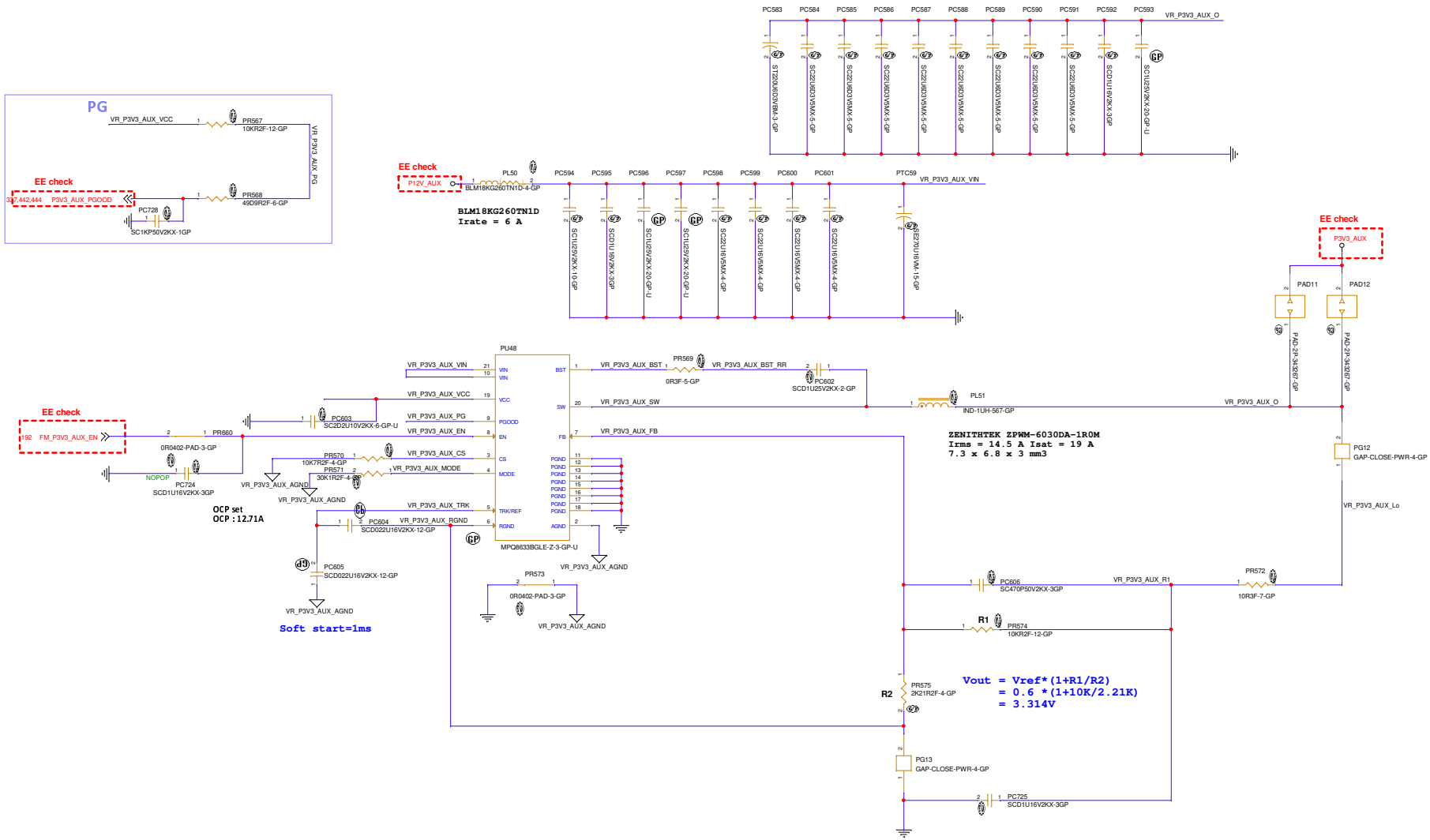

NVIDIA Corporation
2788 San Tomas Expressway
Santa Clara,CA 95051

Title: 0441_P3V3_AUX_MPQ8633B
Size: C
Document Number: DGX Rubin NVL8 MB
Rev: SA
Date: Monday, January 19, 2026
Sheet 441 of 459

Power rail : P2V5_MAX10_AUX
Controller : TPS74801
MAX : 0.25 A
OCP : 2 A ~ 5.5 A (Current Limit)

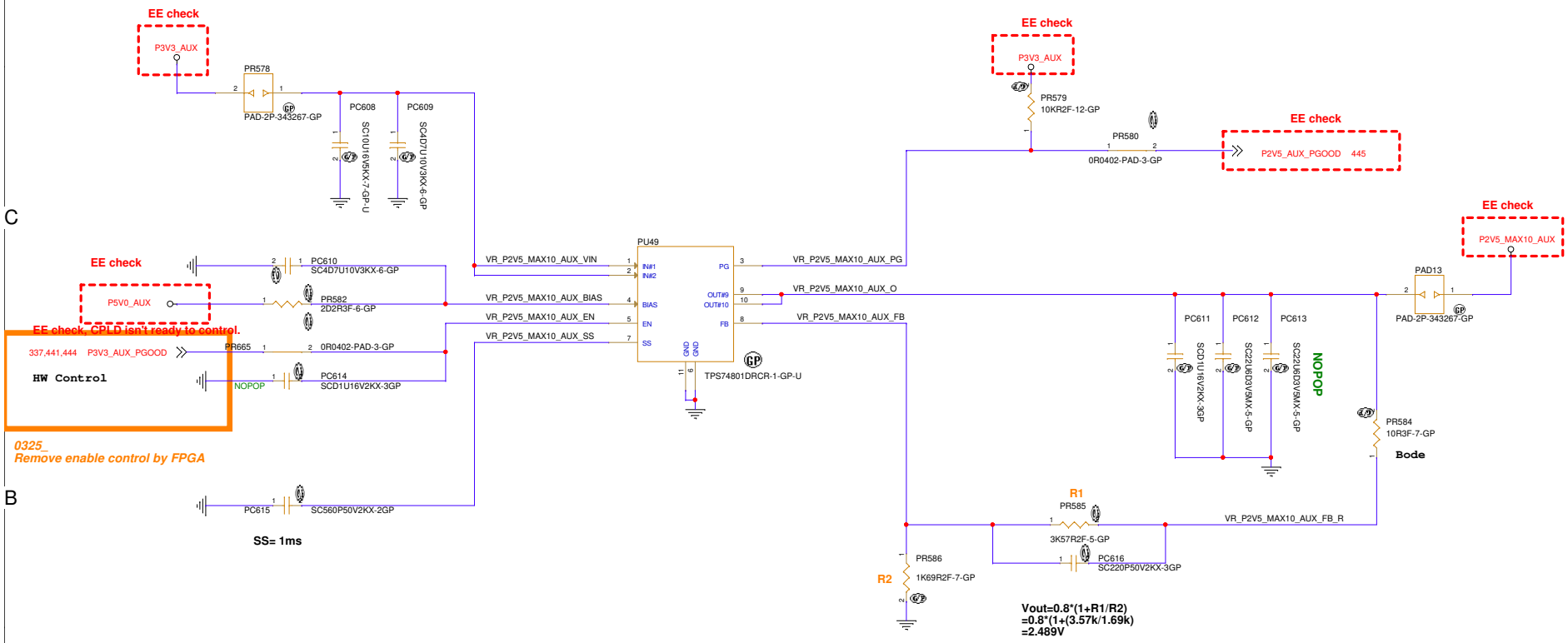

NVIDIA Corporation
2788 San Tomas Expressway
Santa Clara,CA 95051

Title: 0442_P2V5_MAX10_AUX_TPS74801

Size: A3 | Document Number: DGX Rubin NVL8 MB | Rev: SA

Date: Monday, January 19, 2026 | Sheet 442 of 459

Power rail : P1V1_AUX
Controller : TPS74801
MAX : 0.2A
OCP : 2 A ~ 5.5 A (Current Limit)

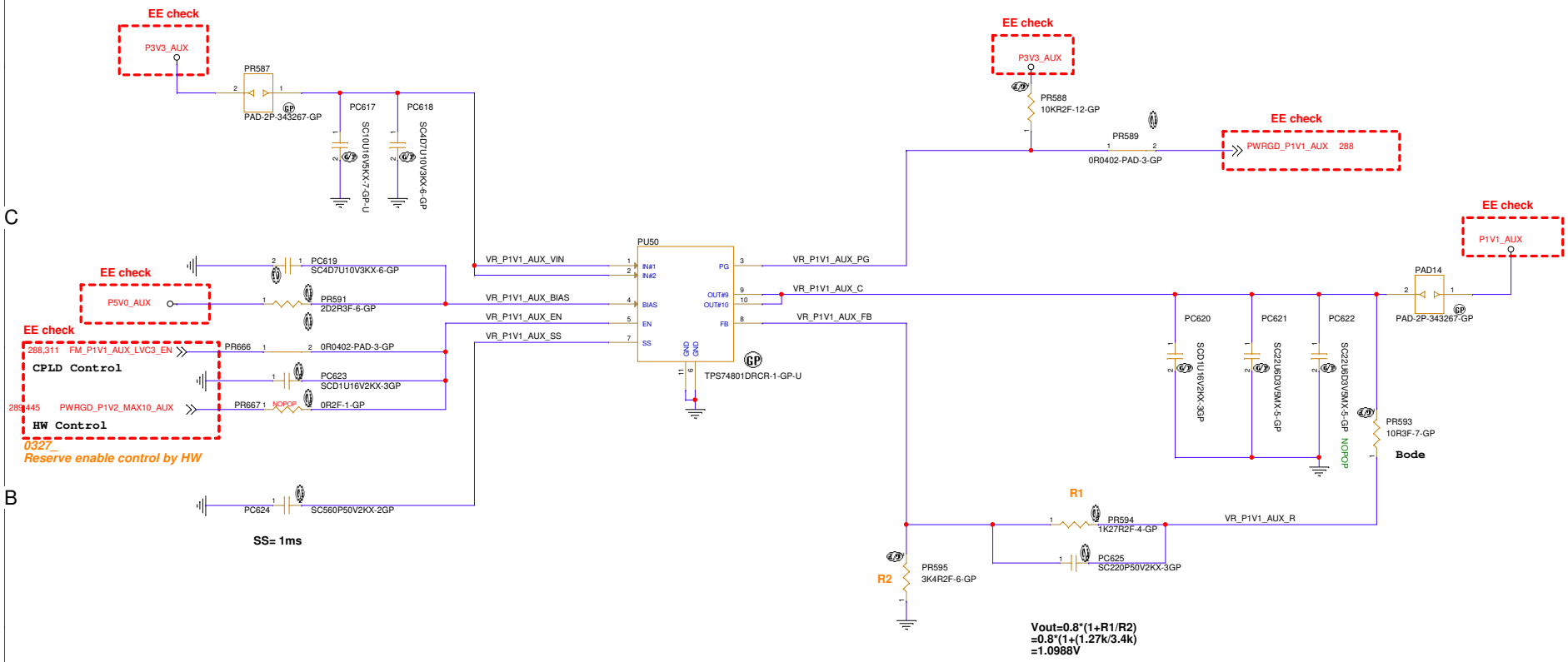

NVIDIA Corporation
2788 San Tomas Expressway
Santa Clara,CA 95051

Title: 0443_P1V1_AUX_TPS74801

Size: A3 | Document Number: DGX Rubin NVL8 MB | Rev: SA

Date: Monday, January 19, 2026 | Sheet 443 of 459

Power rail : P1V8_AUX
Controller : MPQ8626
Fswitching : 600KHz
MAX : 0.6A
OCP : 1.89A

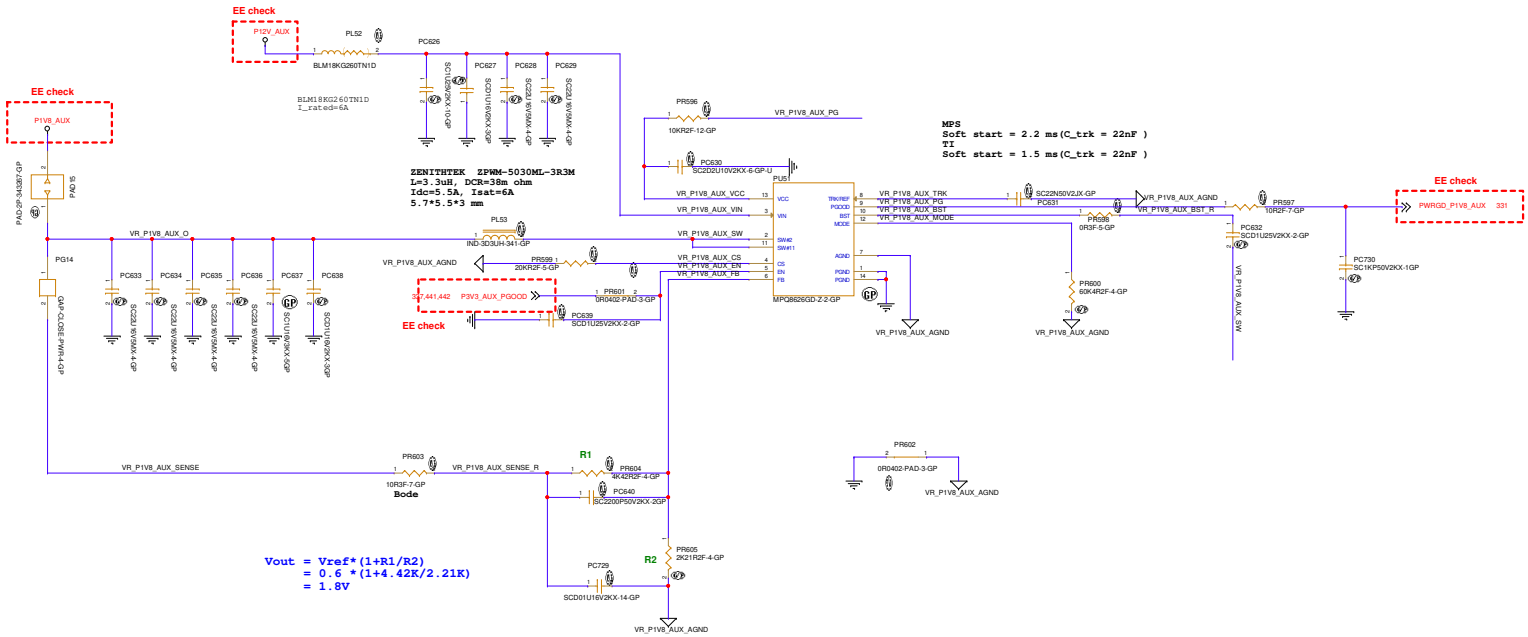

NVIDIA Corporation
2788 San Tomas Expressway
Santa Clara,CA 95051

Title: 0444_P1V8_AUX_MPQ8626

Size: A2 | Document Number: DGX Rubin NVL8 MB | Rev: SA

Date: Monday, January 19, 2026 | Sheet 444 of 459

Power rail : P1V2_MAX10_AUX
Controller : TPS74801
MAX : 0.16A
OCP : 2A

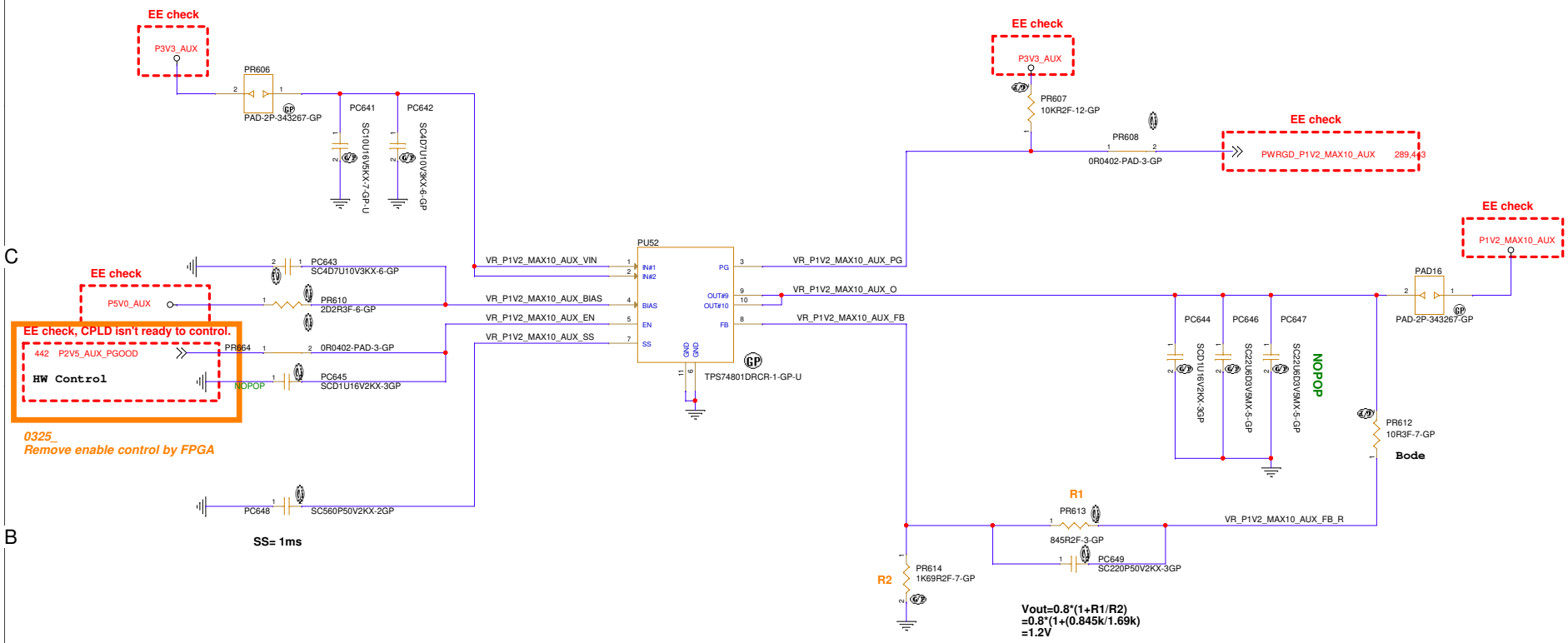

NVIDIA Corporation
2788 San Tomas Expressway
Santa Clara,CA 95051

Title
0445_P1V2_MAX10_AUX_TPS74801

Size A3 | Document Number DGX Rubin NVL8 MB | Rev SA

Date: Monday, January 19, 2026 | Sheet 445 of 459

Power rail : P5V0_AUX
Controller : MPQ8626
Fswitching : 600KHz
MAX : 2.859A
OCP : 4.932A

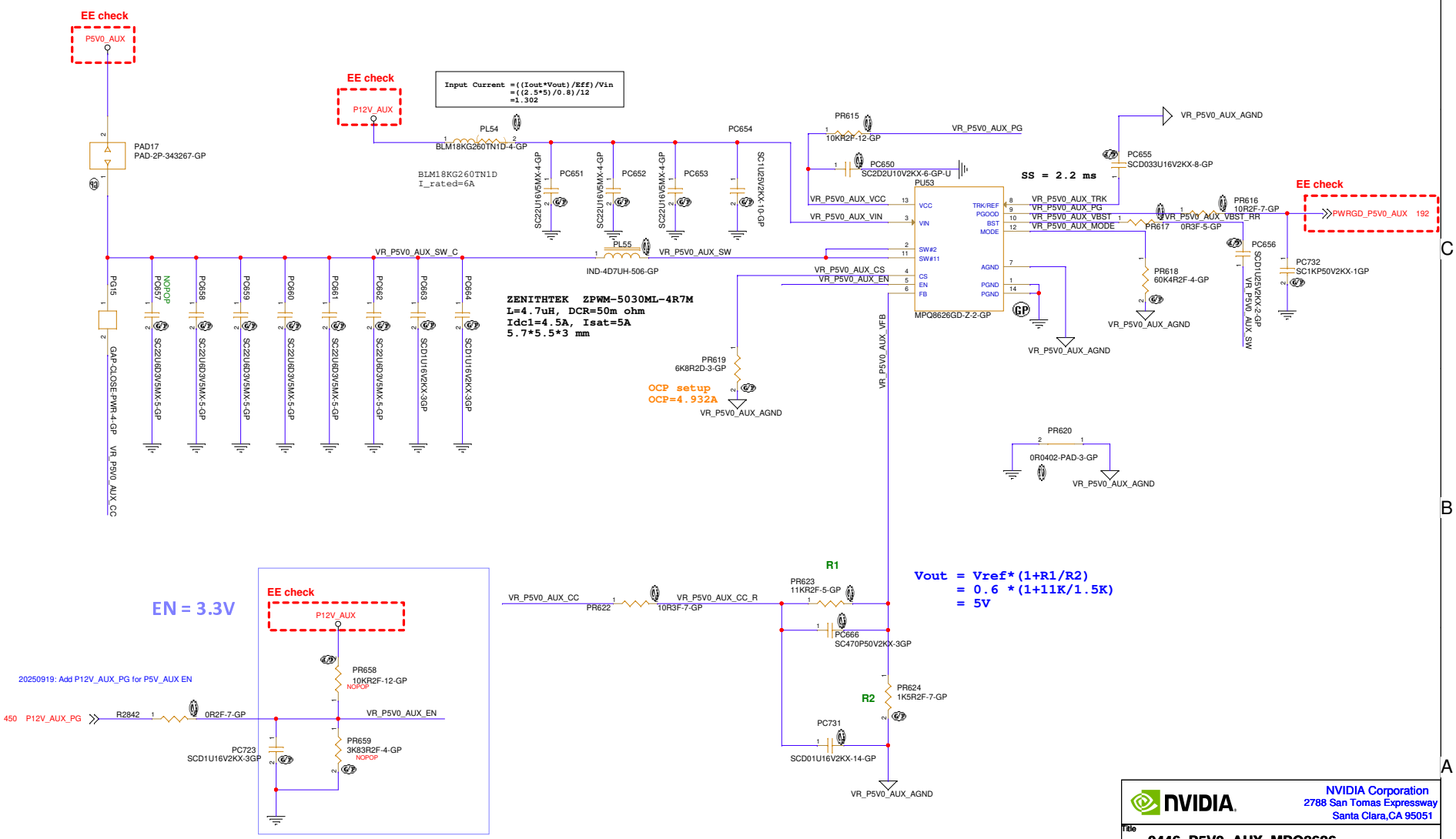

NVIDIA Corporation
2788 San Tomas Expressway
Santa Clara,CA 95051

Title: 0446_P5V0_AUX_MPQ8626

Size: A3 | Document Number: DGX Rubin NVL8 MB | Rev: SA

Date: Monday, January 19, 2026 | Sheet 446 of 459

BLANK

NVIDIA Corporation
2788 San Tomas Expressway
Santa Clara,CA 95051

Title: 0447_BLANK

Size: A2 | Document Number: DGX Rubin NVL8 MB | Rev: SA

Date: Monday, January 19, 2026 | Sheet 447 of 459

BLANK

NVIDIA Corporation
2788 San Tomas Expressway
Santa Clara,CA 95051

Title
0448_BLANK

Size A3 | Document Number DGX Rubin NVL8 MB | Rev SA

Date: Monday, January 19, 2026 | Sheet 448 of 459

BLANK

NVIDIA Corporation
2788 San Tomas Expressway
Santa Clara,CA 95051

Title
0449_BLANK

Size A3 | Document Number DGX Rubin NVL8 MB | Rev SA

Date: Monday, January 19, 2026 | Sheet 449 of 459

Power rail : P12V_AUX
Controller : FAN65008B
Fswitching : 900KHz
MAX : 8A
OCP : 13.8A

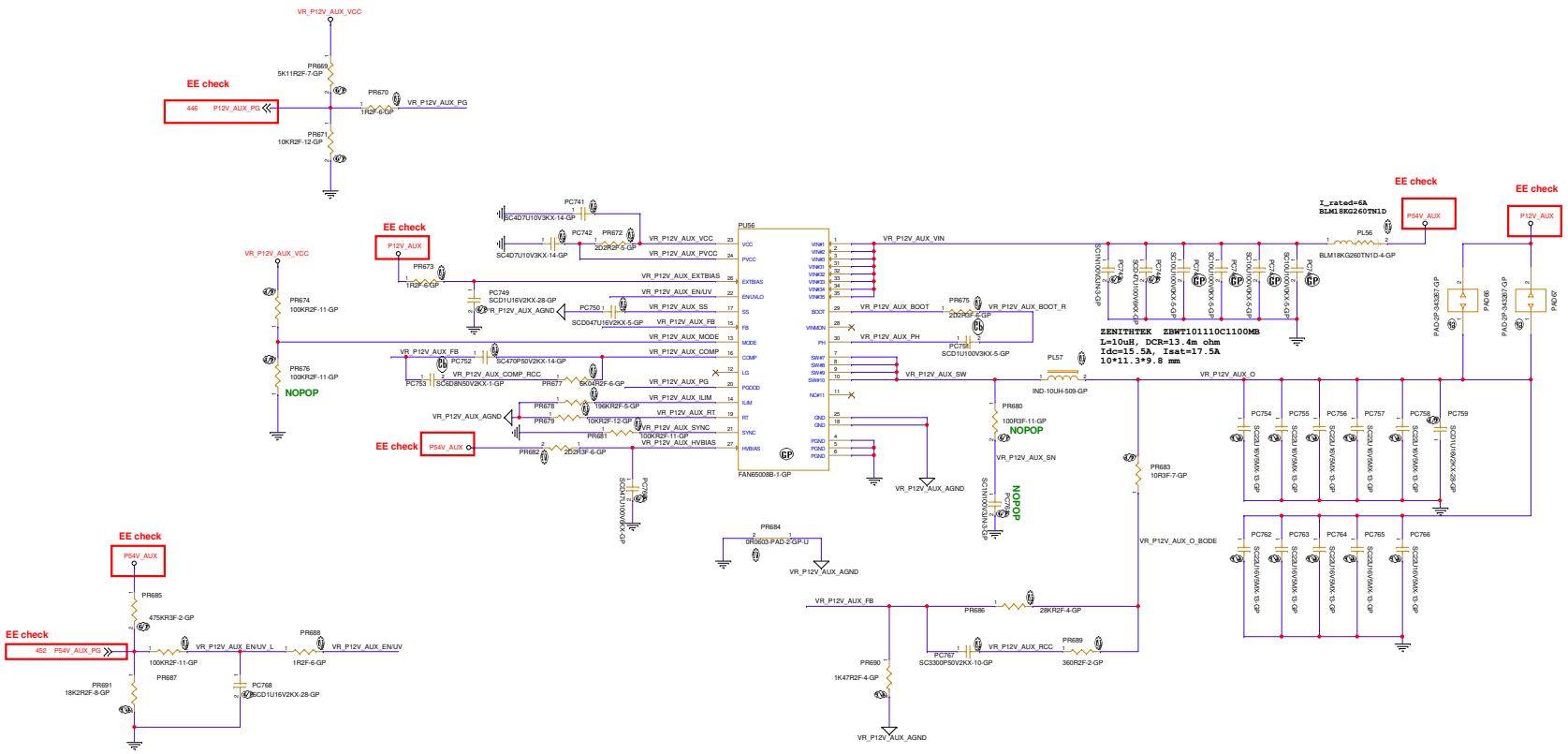

NVIDIA Corporation
2788 San Tomas Expressway
Santa Clara,CA 95051

Title: 0450_P12V_AUX

Size: A2 | Document Number: DGX Rubin NVL8 MB | Rev: SA

Date: Monday, January 19, 2026 | Sheet 450 of 459

Power Rail : P54V_MB
Solution: LM5066i
Voltage : 50V
MAX: 55A
OCP: 63A

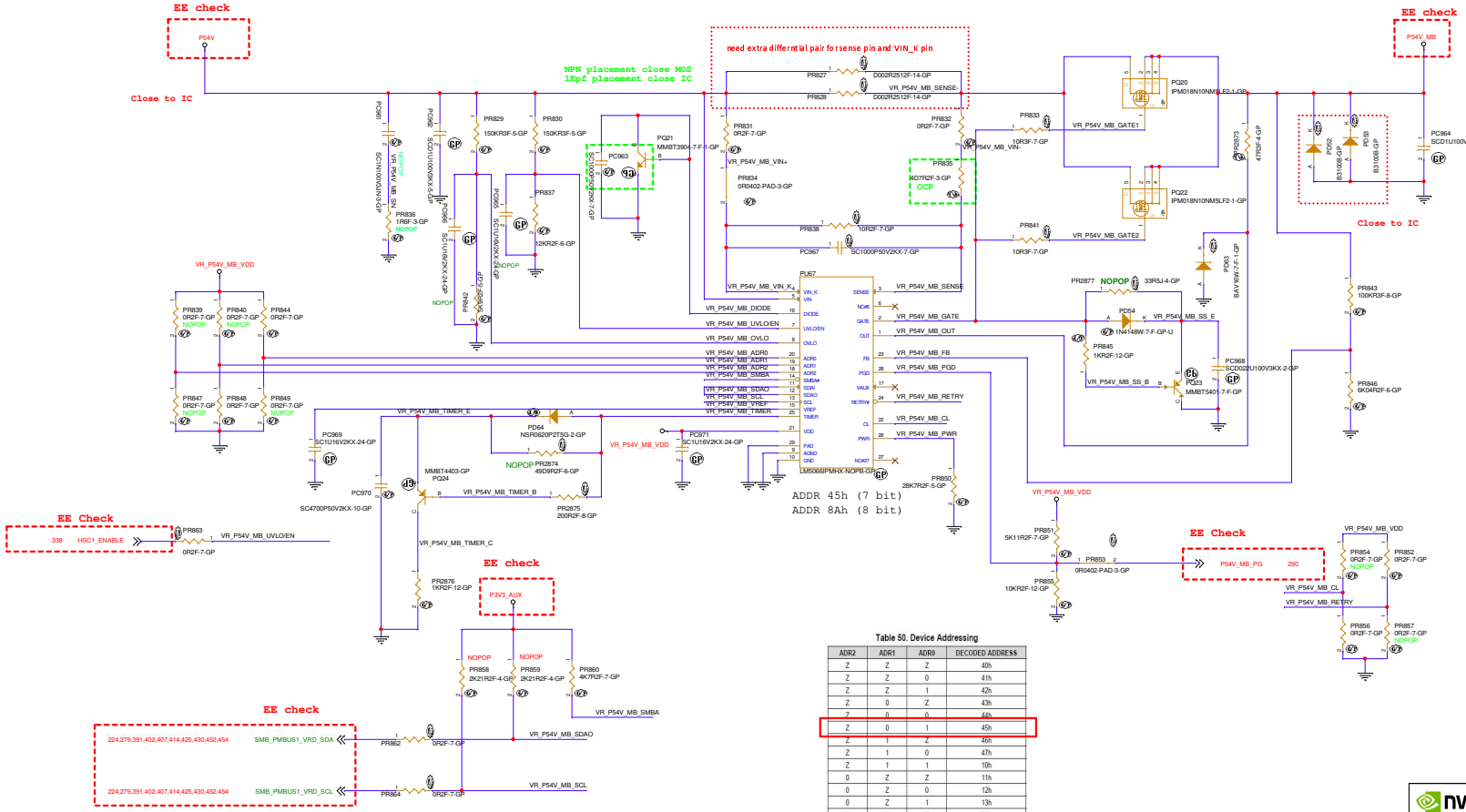

Table 50. Device Addressing

ADR2	ADR1	ADR0	DECODED ADDRESS
Z	Z	Z	40h
Z	Z	0	41h
Z	Z	1	42h
Z	0	Z	43h
Z	0	0	44h
Z	0	1	45h
Z	1	Z	46h
Z	1	0	47h
Z	1	1	10h
0	Z	Z	11h
0	Z	0	12h
0	Z	1	13h
0	0	Z	14h

NVIDIA Corporation
2788 San Tomas Expressway
Santa Clara,CA 95051

Title: 0451_P54V_MB_HSC_LM5066I

Size: A2 | Document Number: DGX Rubin NVL8 MB | Rev: SA

Date: Monday, January 19, 2026 | Sheet 451 of 459

Power rail :P54V_AUX
Controller : XDP720-011
MAX : 3.5A
OCP : 6A

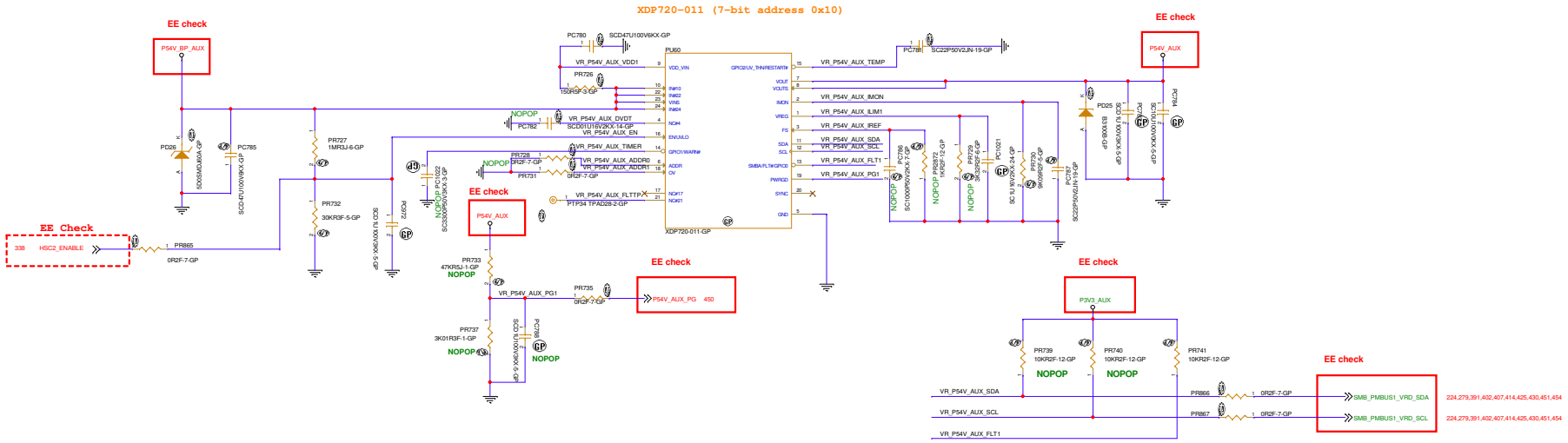

NVIDIA Corporation
2788 San Tomas Expressway
Santa Clara,CA 95051

Title: 0452_P54_AUX_efuse
Size: A2
Document Number: DGX Rubin NVL8 MB
Rev: SA
Date: Monday, January 19, 2026
Sheet 452 of 459

Power Rail : P12V_VRM

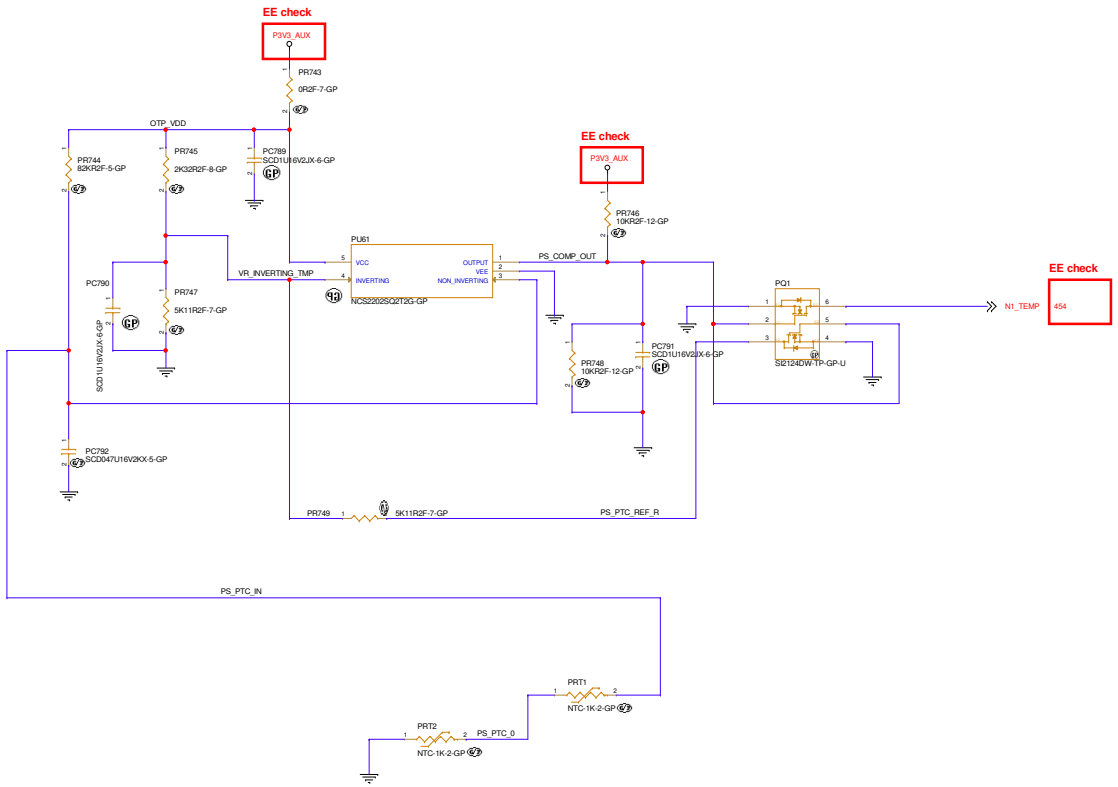

NVIDIA Corporation
2788 San Tomas Expressway
Santa Clara,CA 95051

Title: 0453_P12V_VRM_THERML

Size: Custom | Document Number: DGX Rubin NVL8 MB | Rev: SA

Date: Monday, January 19, 2026 | Sheet 453 of 459

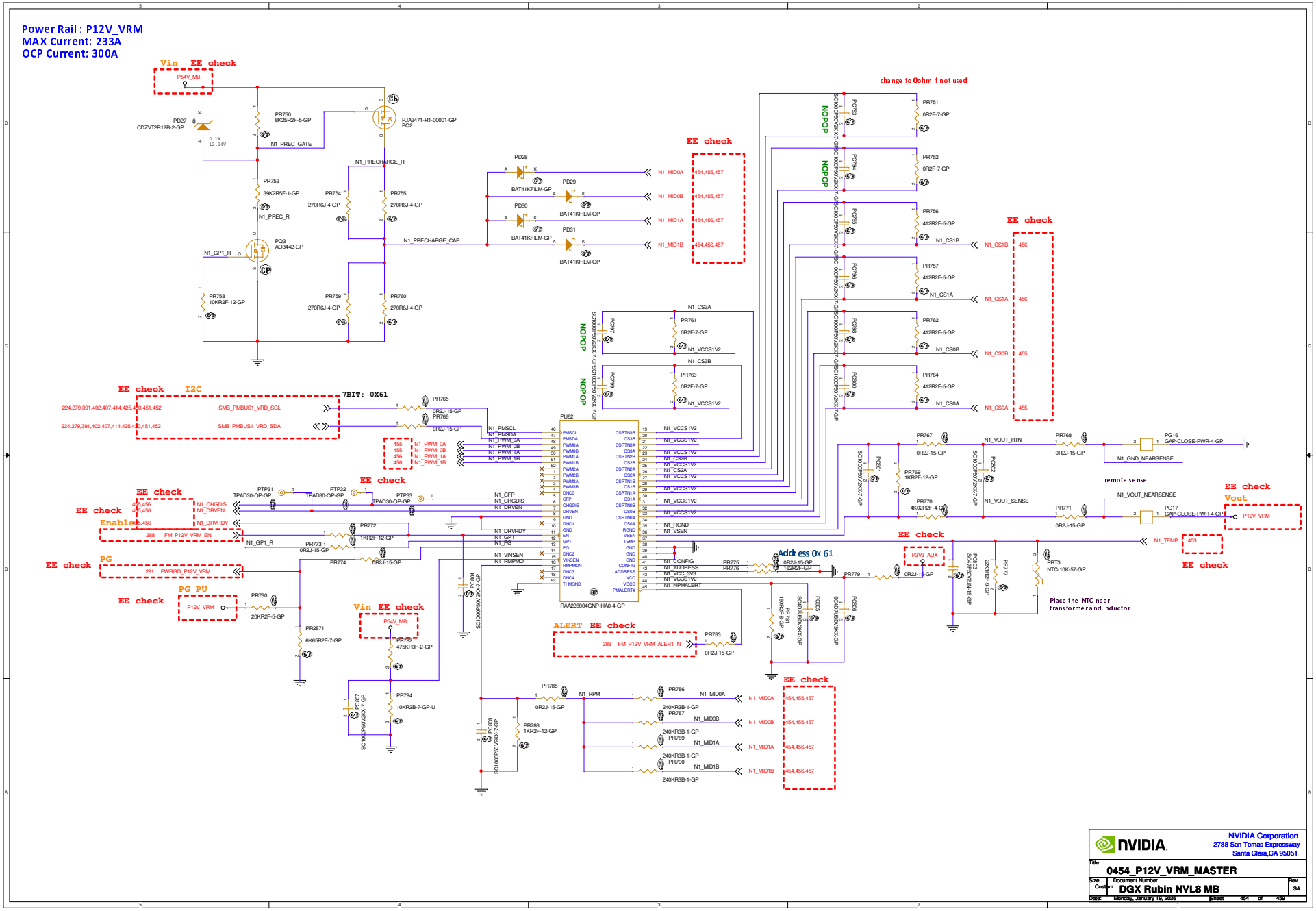
Power Rail : P12V_VRM
MAX Current: 233A
OCP Current: 300A
Vin EE check
P54V_MB
PD27
CDZVT2R12B-2-GP
PR750
8K25R2F-5-GP
PJA3471-R1-00001-GP
PQ2
N1_PREC_GATE
N1_PRECHARGE_R
PR753
39K2R5F-1-GP
N1_PREC_R
PR754
270R6J-4-GP
PR755
270R6J-4-GP
N1_PRECHARGE_CAP
PQ3
AO3442-GP
N1_GP1_R
PR758
10KR2F-12-GP
PR759
270R6J-4-GP
PR760
270R6J-4-GP
PD28
PD29
PD30
PD31
BAT41KFILM-GP
N1_MID0A
N1_MID0B
N1_MID1A
N1_MID1B
EE check
change to 0ohm if not used
NOPOP
PR751
0R2F-7-GP
PR752
0R2F-7-GP
PR756
412R2F-5-GP
N1_CS1B
PR757
412R2F-5-GP
N1_CS1A
PR762
412R2F-5-GP
N1_CS0B
PR764
412R2F-5-GP
N1_CS0A
N1_CS3A
PR761
0R2F-7-GP
N1_VCCS1V2
N1_CS3B
PR763
0R2F-7-GP
N1_VCCS1V2
I2C
7BIT: 0X61
SMB_PMBUS1_VRD_SCL
SMB_PMBUS1_VRD_SDA
PR765
PR766
0R2J-15-GP
N1_PWM_0A
N1_PWM_0B
N1_PWM_1A
N1_PWM_1B
PU62
RAA228004GNP-HA0-4-GP
N1_CFP
N1_CHGDIS
N1_DRVEN
N1_DRVRDY
N1_GP1
N1_PG
N1_VINSEN
N1_RMPMON
N1_RGND
N1_VSEN
N1_TEMP
N1_CONFIG
N1_ADDRESS
N1_VCC_3V3
N1_VCCS1V2
N1_NPMALERT
PTP31
PTP32
PTP33
TPAD30-OP-GP
Enables
FM_P12V_VRM_EN
PR772
1KR2F-12-GP
PR773
0R2J-15-GP
PR774
PG
PWRGD_P12V_VRM
PG PU
P12V_VRM
PR780
20KR2F-5-GP
PR2871
6K65R2F-7-GP
Vin EE check
P54V_MB
PR782
475KR3F-2-GP
PR784
10KR2B-7-GP-U
PC807
SC100P50V0K0X-7-GP
PC804
SC100P50V0K0X-7-GP
PC808
SC100P50V0K0X-7-GP
ALERT EE check
FM_P12V_VRM_ALERT_N
PR783
0R2J-15-GP
Address 0x 61
PR775
PR776
162KR2F-GP
PR779
PR781
150R2F-9-GP
PC805
SCA0T1A0T0K0X-GP
PC806
SCA0T1A0T0K0X-GP
PR785
PR788
1KR2F-12-GP
N1_RPM
PR786
240KR3B-1-GP
PR787
PR789
PR790
N1_MID0A
N1_MID0B
N1_MID1A
N1_MID1B
454,455,457
456
455
PR767
0R2J-15-GP
PR769
1KR2F-12-GP
PR770
4K02R2F-4-GP
PC301
PC302
SC100P50V0K0X-7-GP
N1_VOUT_RTN
N1_VOUT_SENSE
PR768
0R2J-15-GP
PR771
0R2J-15-GP
PG16
GAP-CLOSE-PWR-4-GP
N1_GND_NEARSENSE
remote sense
N1_VOUT_NEARSENSE
PG17
GAP-CLOSE-PWR-4-GP
EE check
Vout
P12V_VRM
N1_TEMP
453
P3V3_AUX
PC803
SCA7R0J0J2A0N-19-GP
22KR2F-9-GP
PR177
PRT3
NTC-10K-57-GP
Place the NTC near transformer and inductor
NVIDIA Corporation
2788 San Tomas Expressway
Santa Clara,CA 95051
Title
0454_P12V_VRM_MASTER
Size Custom
Document Number
DGX Rubin NVL8 MB
Rev SA
Date: Monday, January 19, 2026
Sheet 454 of 459

Power Rail : P12V_VRM

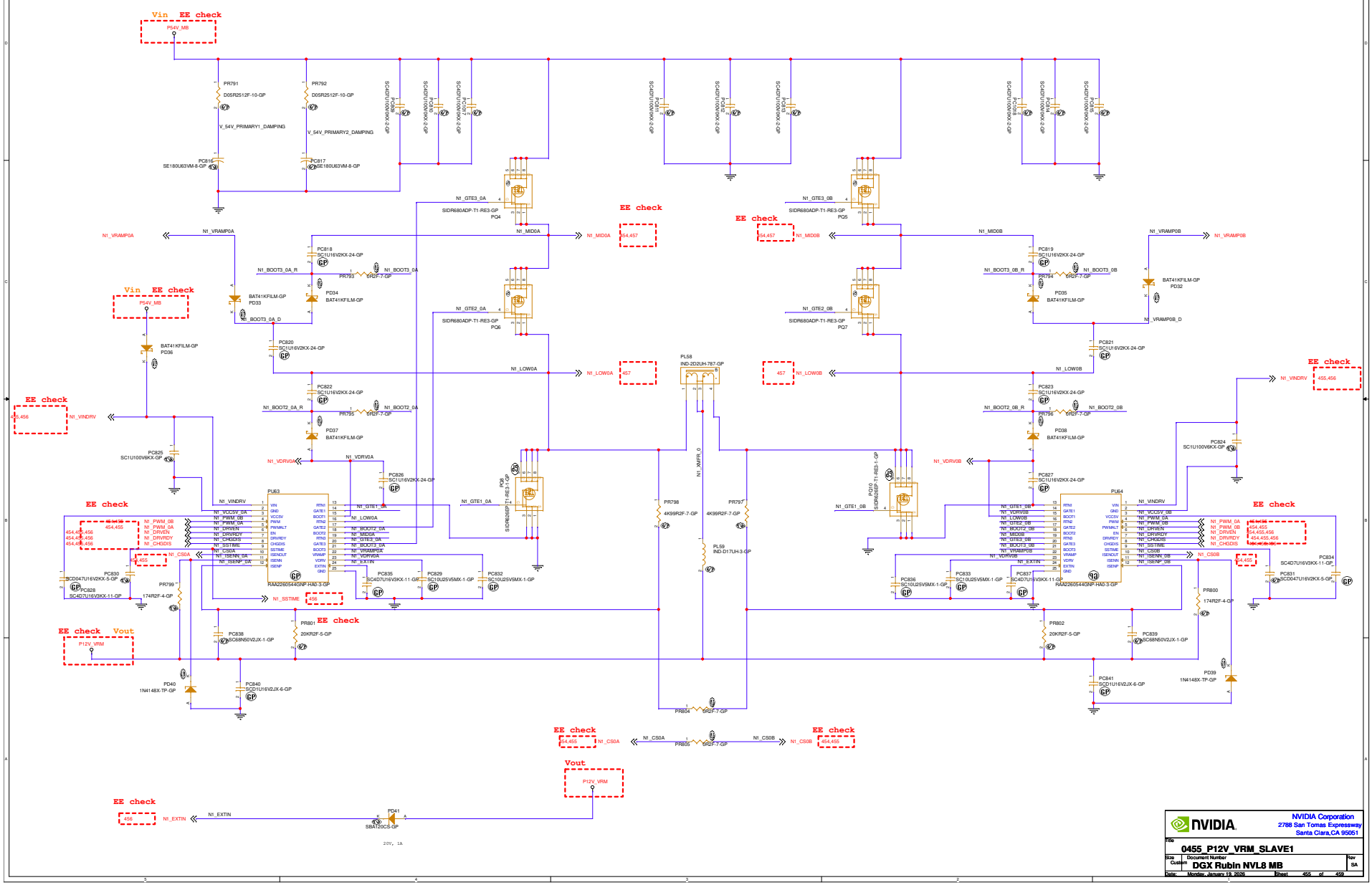

Power Rail : P12V_VRM

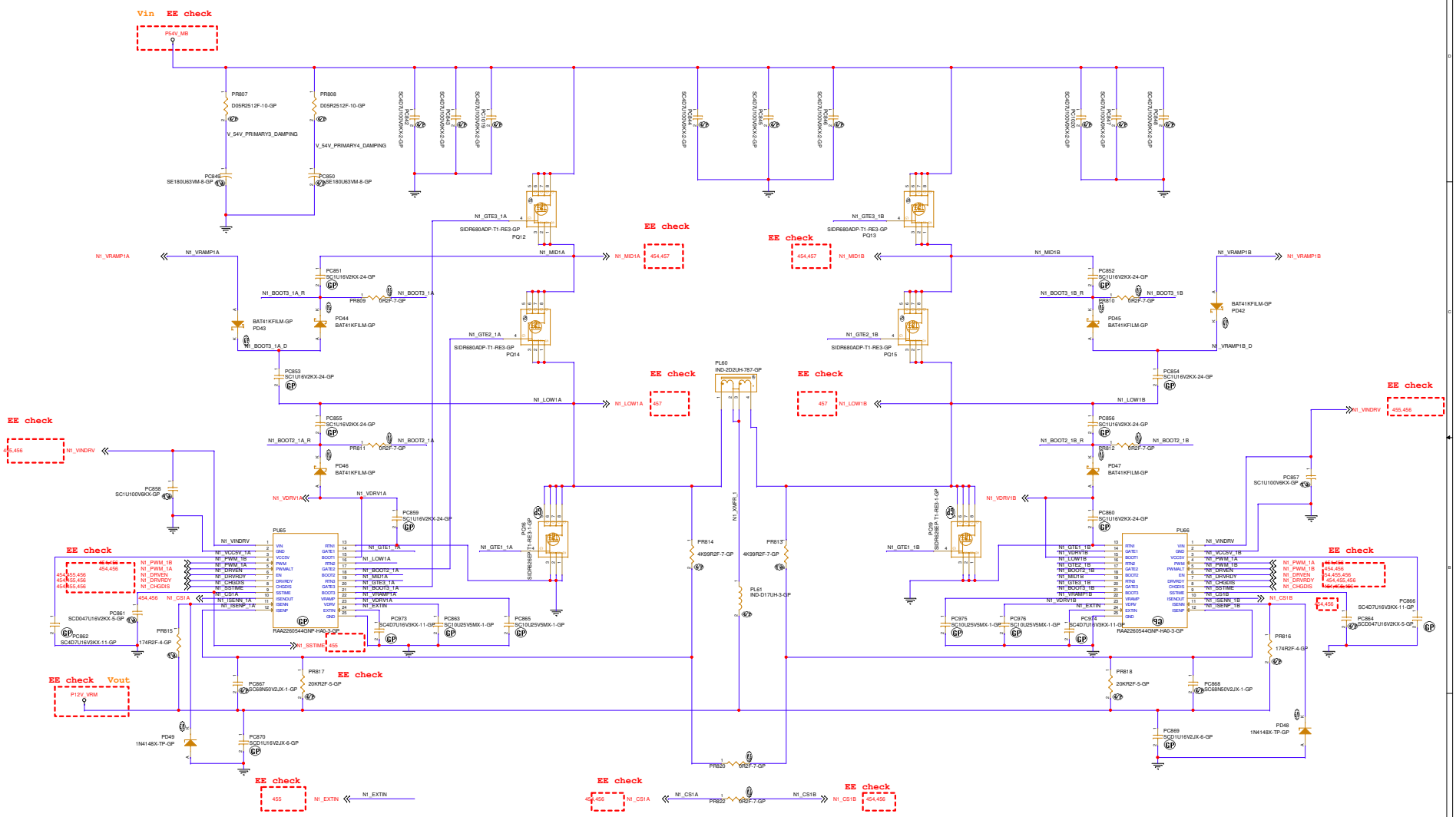

NVIDIA Corporation
2788 San Tomas Expressway
Santa Clara,CA 95051

Title: 0456_P12V_VRM_SLAVE2

Size: Custom | Document Number: DGX Rubin NVL8 MB | Rev: SA

Date: Monday, January 19, 2026 | Sheet 456 of 459

Voltage = Vin/2 = 27V

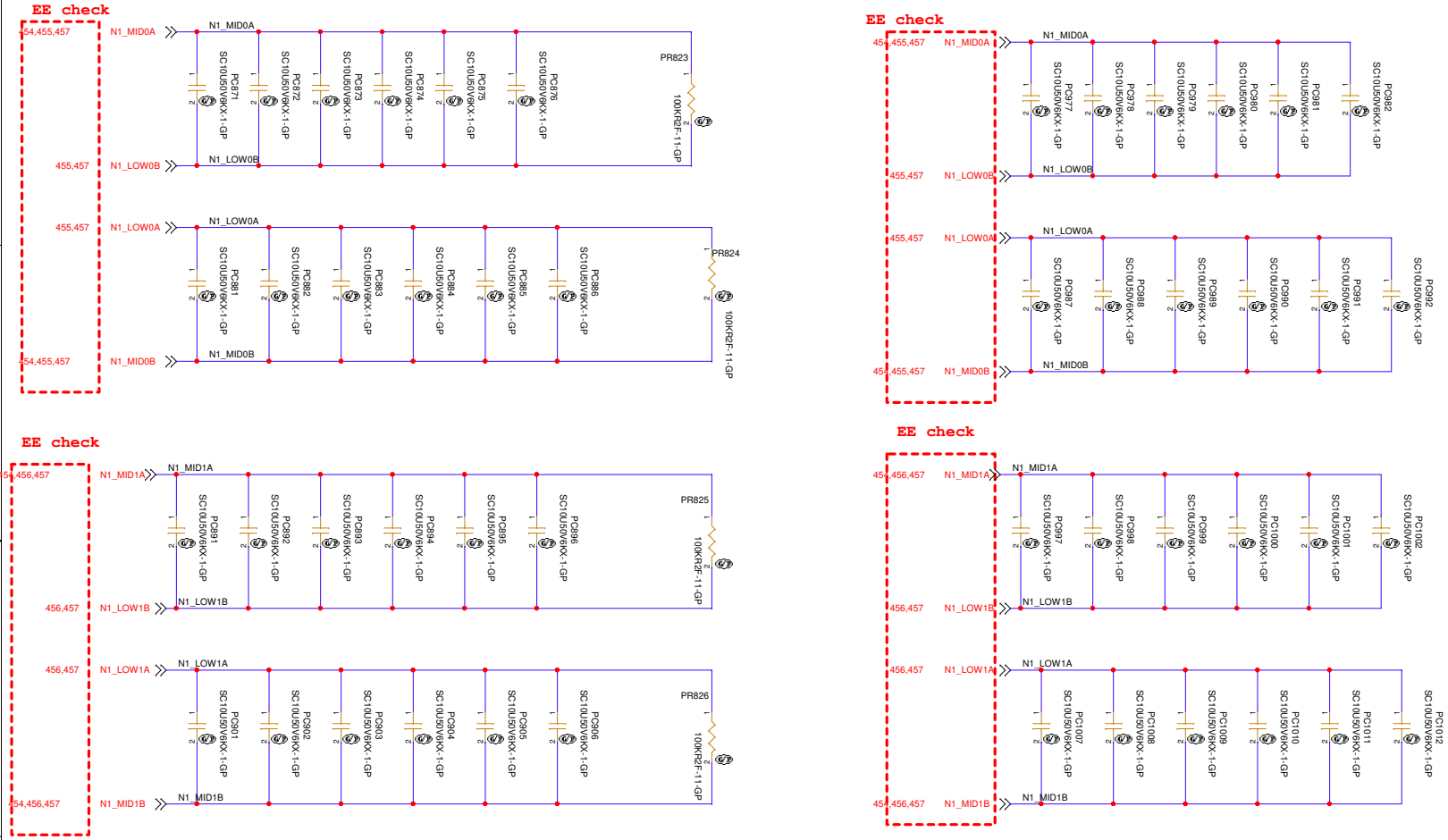

20251027: Change P12V_VRM flying caps PN to 078.10624.M015(GRM31CD71H106KE11L)

NVIDIA Corporation
2788 San Tomas Expressway
Santa Clara,CA 95051

Title	0457_P12V_VRM_FLYING CAPS	
Size A3	Document Number DGX Rubin NVL8 MB	Rev SA
Date: Monday, January 19, 2026	Sheet 457 of 459	

PT1 OUTPUT MLCC

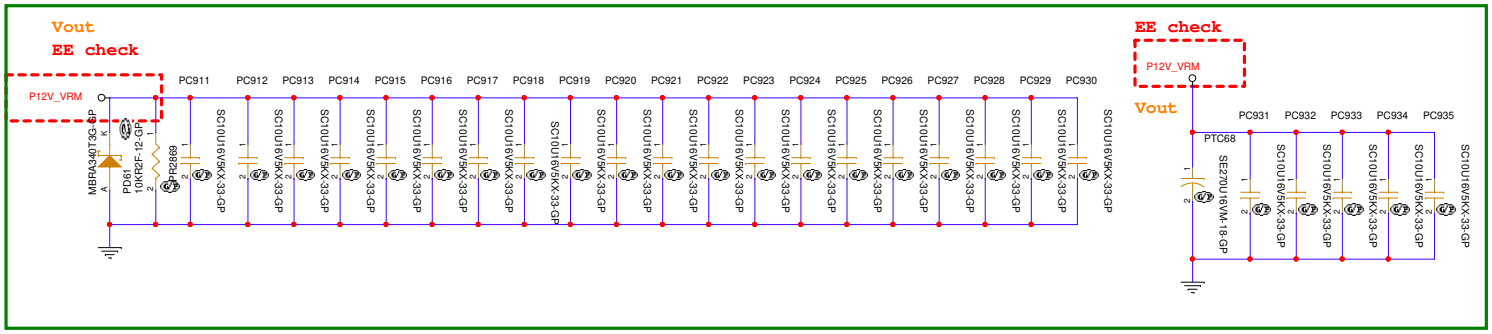

PT2 OUTPUT MLCC

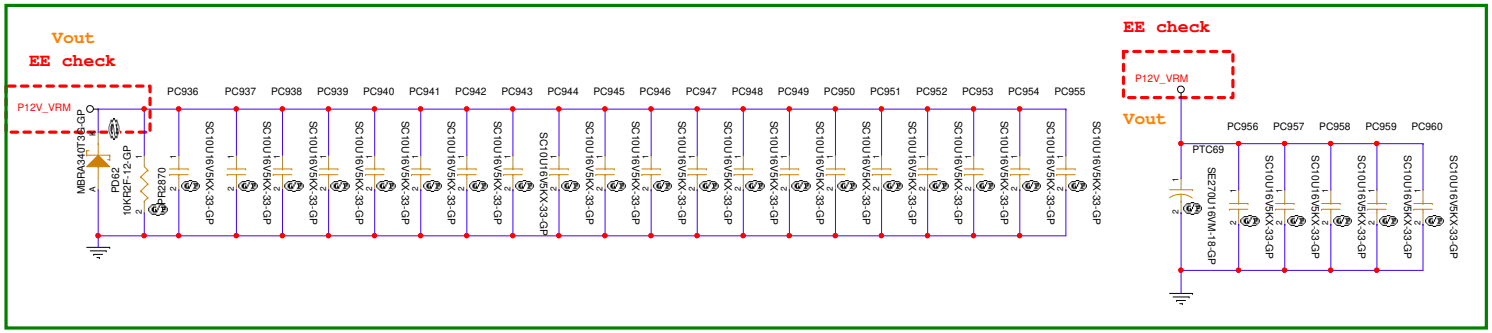

NVIDIA Corporation
2788 San Tomas Expressway
Santa Clara,CA 95051

Title
0458_P12V_VRM_OUTPUT CAP

Size	Document Number	Rev
A3	DGX Rubin NVL8 MB	SA

Date: Monday, January 19, 2026 Sheet 458 of 459

NVIDIA Corporation
2788 San Tomas Expressway
Santa Clara,CA 95051

Title
0459_BLANK

Size	Document Number	Rev
A3	**DGX Rubin NVL8 MB**	SA

Date: Monday, January 19, 2026 Sheet 459 of 459