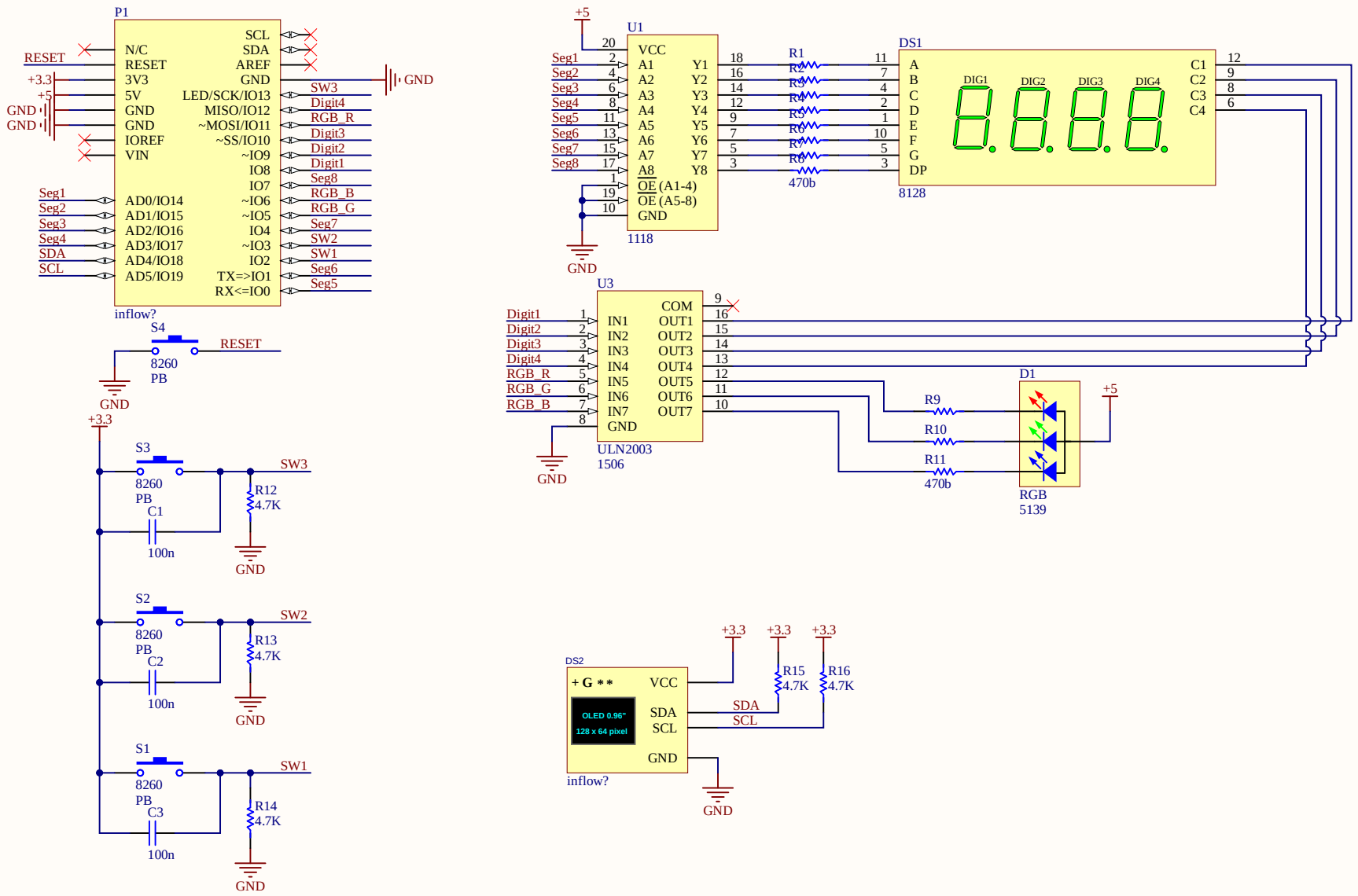

Title: **Schematic**	Drawn by:	**Hossein Bagheri**	
Project: **7Segment Shield**	Revision: 1.0	aKaReZa	
Company: **github.com/aKaReZa75**	Sheet 1 of 1		