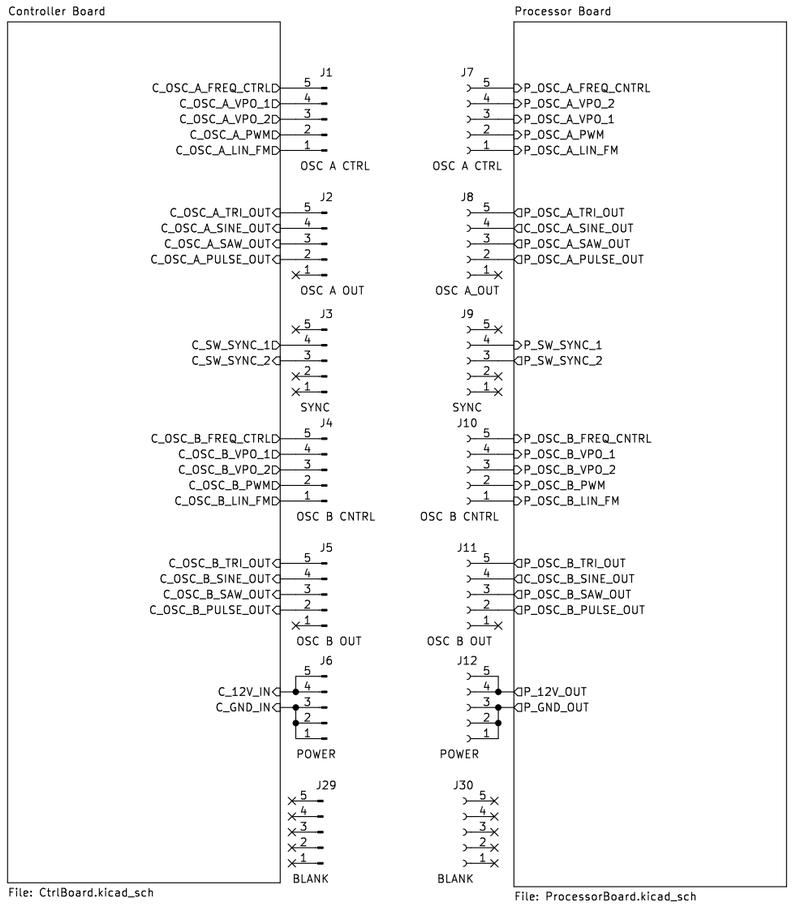

RTT DUAL VCO 3340

aRTyTea Music Electronics

Sheet: /

File: VCO3340.kicad_sch

Title: DUAL VCO CEM3340

Size: A3	Date: 20220403	**Rev: 1.1**
KiCad E.D.A. kicad (6.0.2)		Id: 1/3

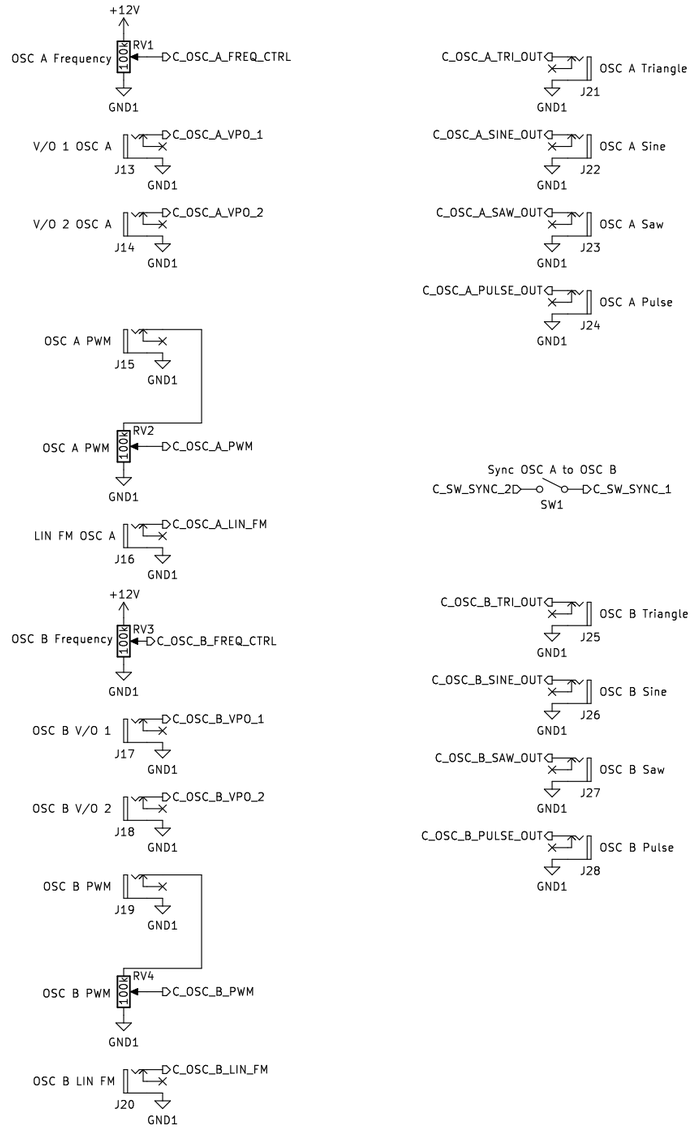

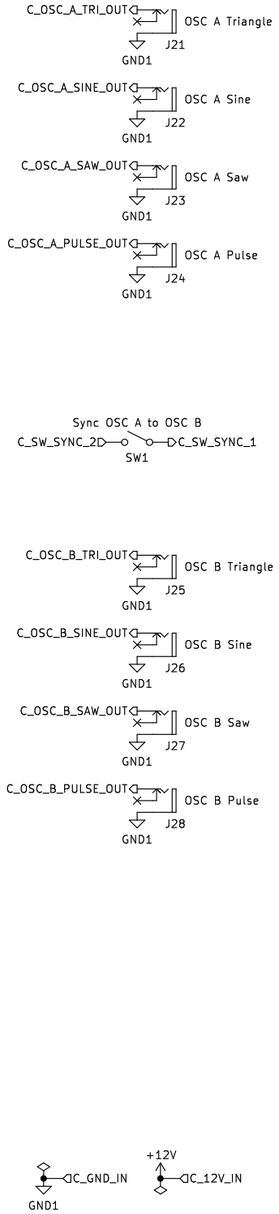

aRTyTea Music Electronics

Sheet: /Controller Board/
File: CtrlBoard.kicad_sch

Title: DUAL VCO CEM3340

Size: A3	Date:	**Rev: 1.1**
KiCad E.D.A. kicad (6.0.2)		Id: 2/3

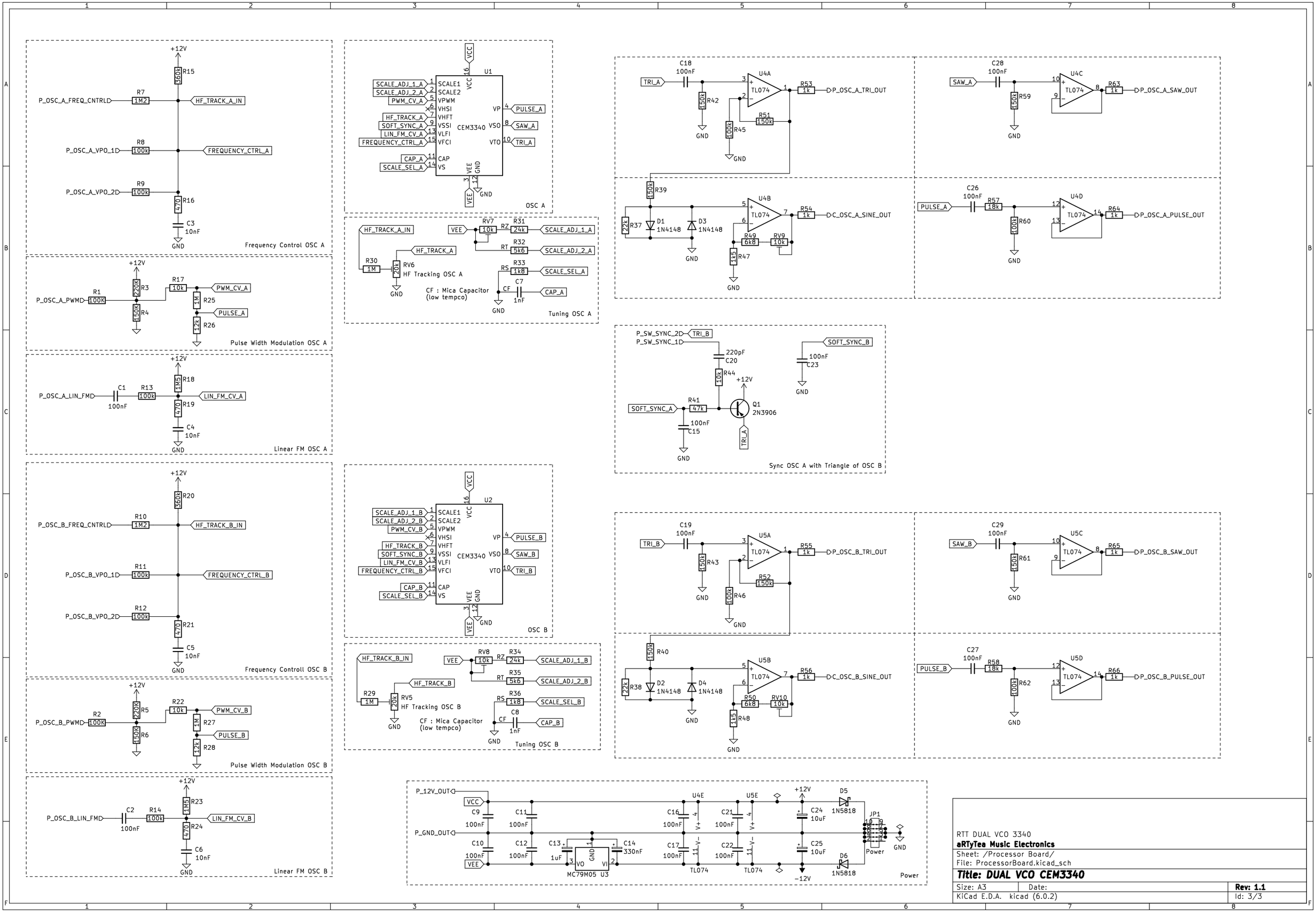
Frequency Control OSC A
P_OSC_A_FREQ_CNTRLD
HF_TRACK_A_IN
P_OSC_A_VPO_1
FREQUENCY_CTRL_A
P_OSC_A_VPO_2
Pulse Width Modulation OSC A
P_OSC_A_PWMD
PWM_CV_A
PULSE_A
Linear FM OSC A
P_OSC_A_LIN_FMD
LIN_FM_CV_A
Frequency Controll OSC B
P_OSC_B_FREQ_CNTRLD
HF_TRACK_B_IN
P_OSC_B_VPO_1
FREQUENCY_CTRL_B
P_OSC_B_VPO_2
Pulse Width Modulation OSC B
P_OSC_B_PWMD
Linear FM OSC B
P_OSC_B_LIN_FMD
CEM3340
OSC A
OSC B
HF Tracking OSC A
HF Tracking OSC B
CF : Mica Capacitor
(low tempco)
Tuning OSC A
Tuning OSC B
TL074
P_OSC_A_TRI_OUT
P_OSC_A_SAW_OUT
C_OSC_A_SINE_OUT
P_OSC_A_PULSE_OUT
Sync OSC A with Triangle of OSC B
P_SW_SYNC_2
P_SW_SYNC_1
SOFT_SYNC_A
SOFT_SYNC_B
Q1
2N3906
P_OSC_B_TRI_OUT
P_OSC_B_SAW_OUT
C_OSC_B_SINE_OUT
P_OSC_B_PULSE_OUT
P_12V_OUT
P_GND_OUT
MC79M05 U3
Power
RTT DUAL VCO 3340
aRTyTea Music Electronics
Sheet: /Processor Board/
File: ProcessorBoard.kicad_sch
Title: DUAL VCO CEM3340
Size: A3
Date:
Rev: 1.1
KiCad E.D.A. kicad (6.0.2)
Id: 3/3