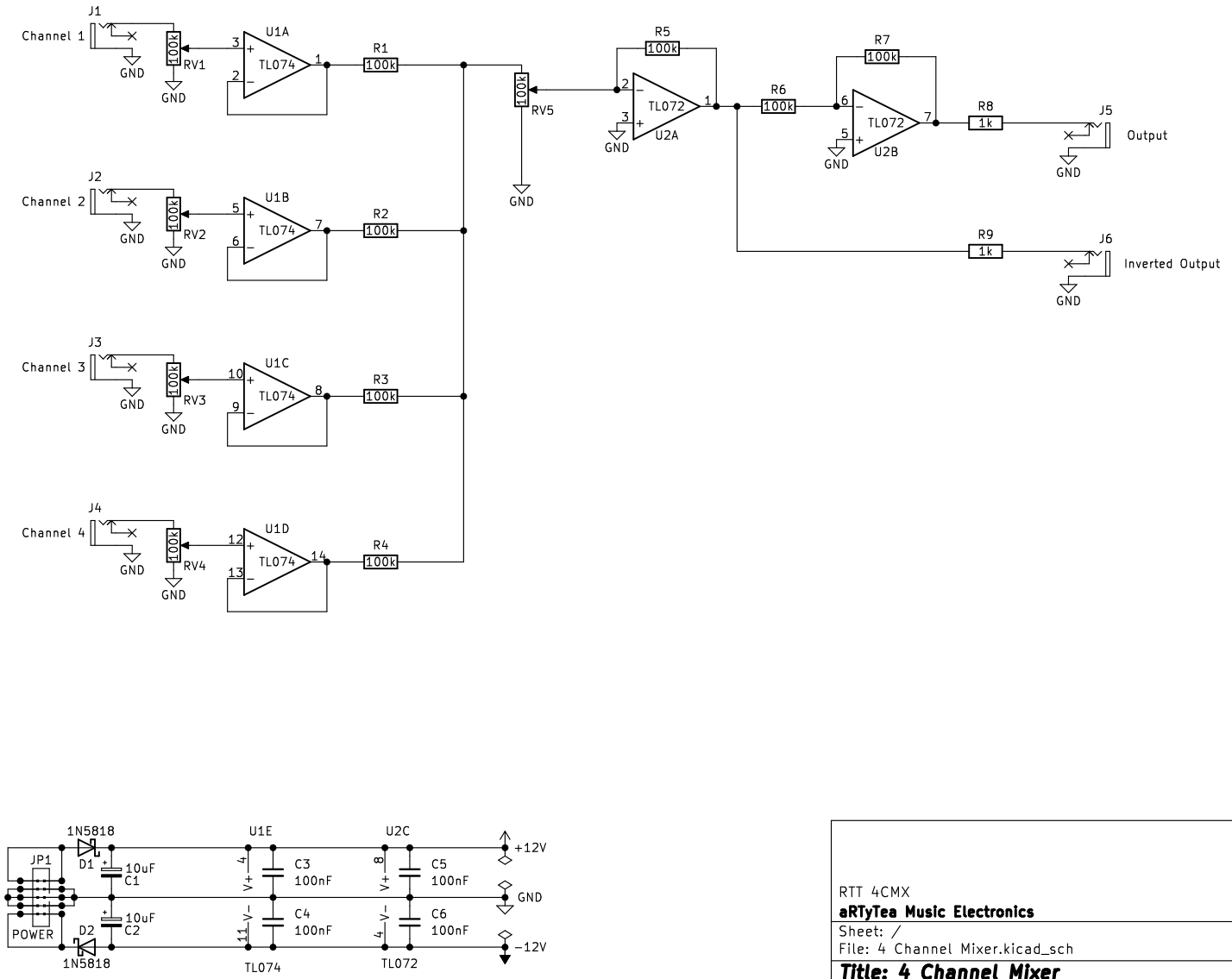

RTT 4CMX

aRTyTea Music Electronics

Sheet: /

File: 4 Channel Mixer.kicad_sch

Title: 4 Channel Mixer

Size: A4	Date: 2022-04-23	**Rev: 1.1**
KiCad E.D.A. kicad (6.0.10)		Id: 1/1