United States Patent [19]

Blackwood et al.

[11] **Patent Number: 5,049,486**

[45] **Date of Patent: Sep. 17, 1991**

[54] **TEMPERATURE MONITORING APPARATUS AND METHOD IN A COMPOSTING SYSTEM THROUGH WHICH ORGANIC MATTER IS MOVED TO EFFECT COMPOSTING**

[75] Inventors: **Kenneth R. Blackwood**, Homewood; **David B. Derryberry**, Irondale, both of Ala.

[73] Assignee: **Ashbrook-Simon-Hartley Corporation**, Houston, Tex.

[21] Appl. No.: **337,868**

[22] Filed: **Apr. 14, 1989**

[51] **Int. Cl.**[5] **C12Q 3/00**; C12M 1/38

[52] **U.S. Cl.** **435/3**; 435/290; 435/299; 435/313; 435/813; 422/184; 210/612; 71/9; 374/141

[58] **Field of Search** 435/3, 289, 290, 291, 435/284, 299, 313, 813, 316; 422/184; 210/612, 613; 71/9, 10; 374/137, 141, 148; 241/23; 34/30

[56] **References Cited**

U.S. PATENT DOCUMENTS

3,921,228	11/1975	Sundberg	422/184
4,384,877	5/1983	Nemetz	435/3
4,436,817	3/1984	Nemetz	435/313
4,707,148	11/1987	Richmond	374/137
4,798,802	1/1989	Ryan	422/184

FOREIGN PATENT DOCUMENTS

2199820	7/1988	United Kingdom	71/9

Primary Examiner—David L. Lacey
Assistant Examiner—William H. Beisner
Attorney, Agent, or Firm—Foley & Lardner

[57] **ABSTRACT**

A temperature monitoring method and apparatus for monitoring the temperature within a mass of organic matter moved through a composting vessel. An elongated, stationary probe extends through the vessel from one end toward another end thereof. A plurality of temperature measuring devices are mounted along the probe. The probe may extend through a compaction ram and be provided with a sleeve for accommodating movement of the ram relative to the probe. A decoupling device provides for decoupling of the probe from a mounting base and an extraction device permits the probe to be extracted from the vessel for replacement thereof. The probe provides a method of monitoring temperature in the mass and a method of composting by monitoring temperature in the mass and regulating the temperature of the mass in response thereto.

18 Claims, 3 Drawing Sheets

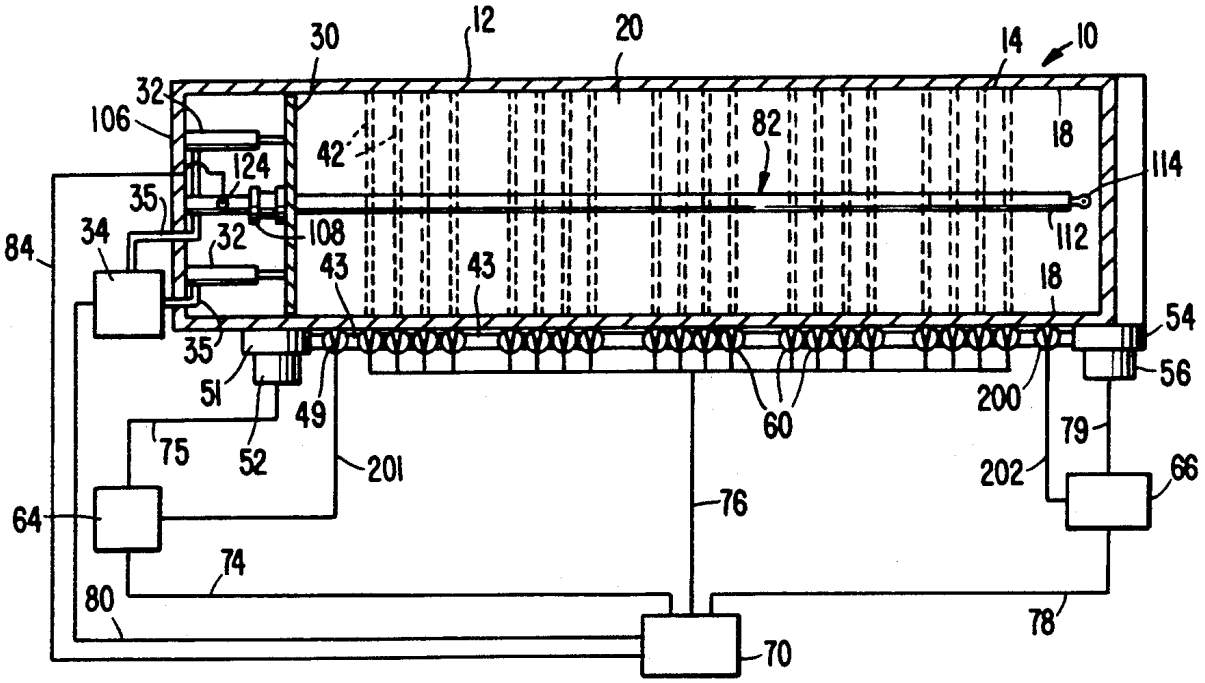

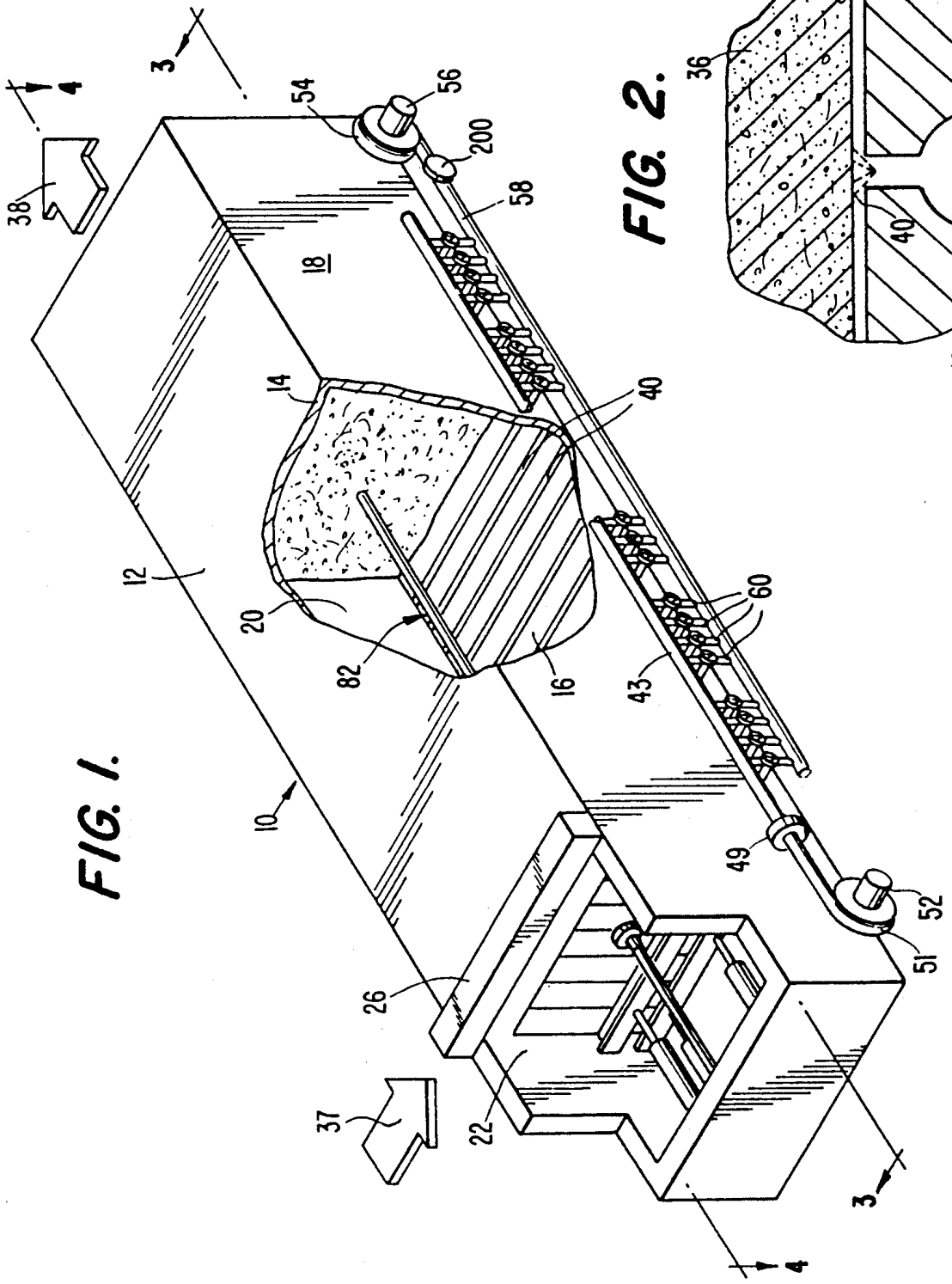

FIG. 1.

FIG. 2.

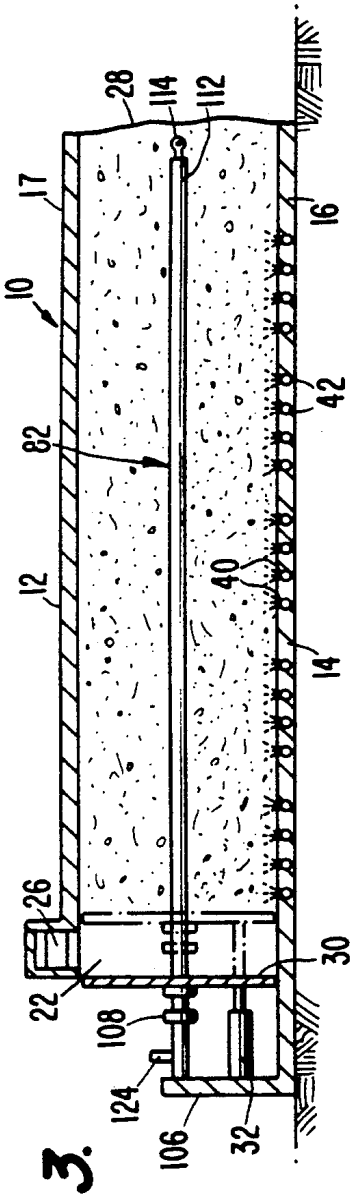
10
12
14
16
17
22
26
28
30
32
40
42
82
106
108
112
114
124

FIG. 3.

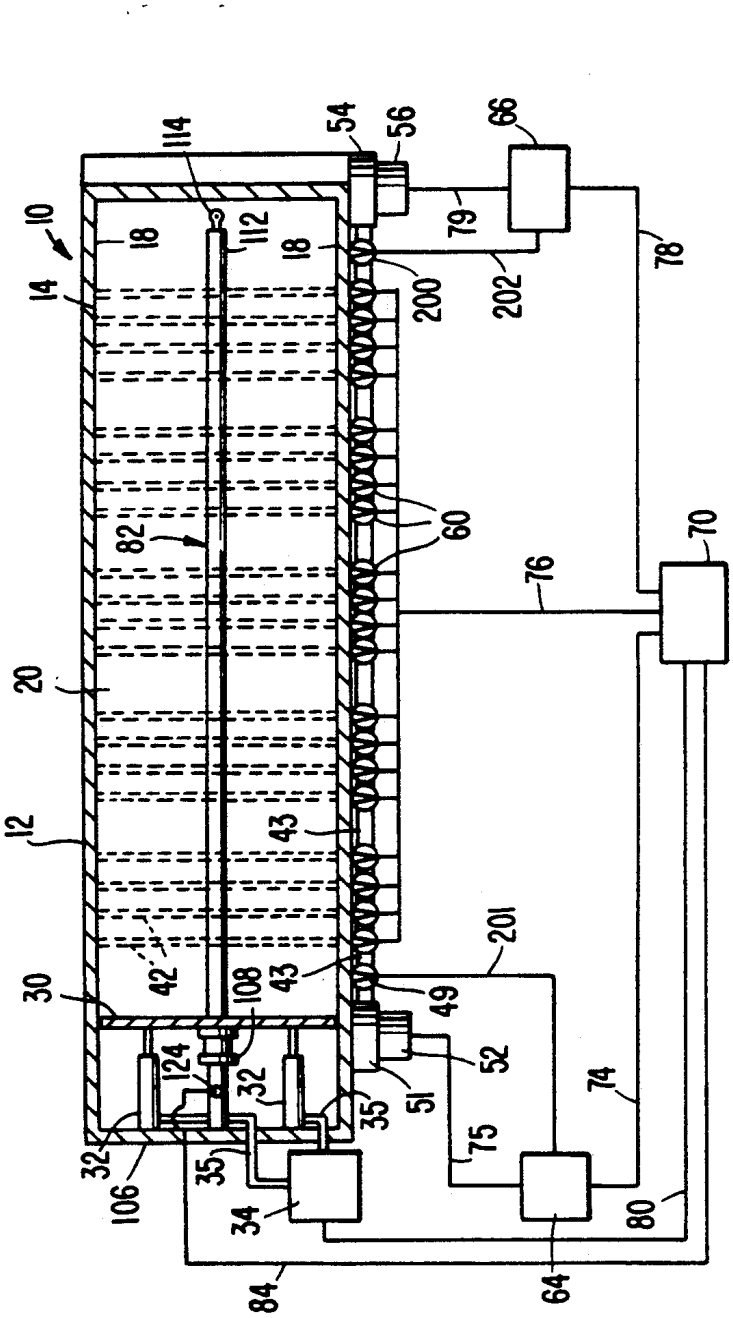
10
12
14
18
20
30
32
34
35
42
43
49
51
52
54
56
60
64
66
70
74
75
76
78
79
80
82
84
106
108
112
114
124
200
201
202

FIG. 4.

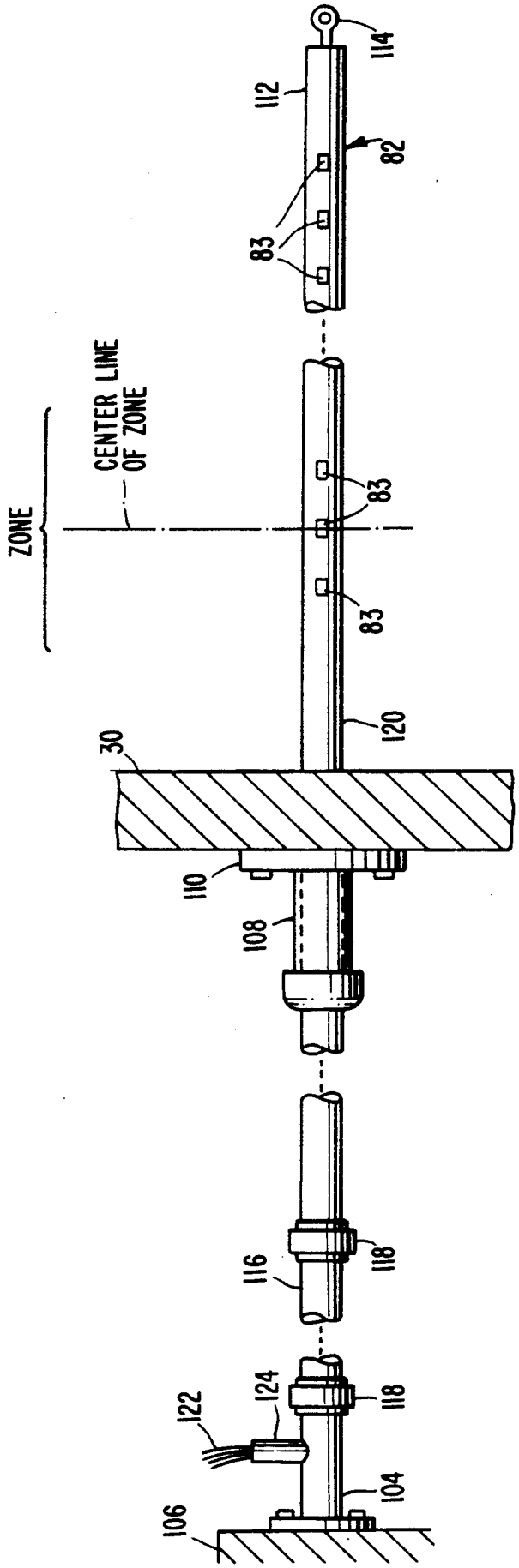
114
112
82
83
CENTER LINE OF ZONE
ZONE
83
83
120
30
110
108
116
118
122
124
118
104
106

FIG. 5.

TEMPERATURE MONITORING APPARATUS AND METHOD IN A COMPOSTING SYSTEM THROUGH WHICH ORGANIC MATTER IS MOVED TO EFFECT COMPOSTING

BACKGROUND OF THE INVENTION

1. Field of the Invention

The invention relates to a method and apparatus for monitoring temperature during aerobic composting of organic waste matter.

2. Discussion of the Prior Art

It is known to compost organic waste material, such as sludge from a waste water treatment facility or garbage, utilizing mechanical composting bins or vessels and pressurized aeration channels. The goal is to produce a nonodorous organic material which can often be sold as a soil amendment and which at least is not costly and objectionable to dispose of. In the process, the amount of water in the composting material is reduced, thus resulting in drying of the organic matter to further alleviate the disposal problem.

The usual proposals for mechanical composting have involved upright, cylindrical devices in the nature of silos through which pressurized aeration air is circulated to aid in the decomposition process. As an alternative to vertical composting silos, it is known to provide a horizontal composting method and apparatus of a simple construction in which organic matter is moved horizontally along the length of the composting vessel in a stepwise fashion with the use of an actuated ram. Diffusers have been used along the length of the vessel to inject aeration air into the organic matter to aid in carrying out the composting process in a relatively short period of time by controlling the temperature.

This temperature control is a critical part of the composting process. If the temperature of the organic matter is too low, the process will take too long to complete. On the other hand, if the temperature is too high, the process breaks down. The key to economically operating whatever equipment is used in the composting process is to achieve an optimum temperature for a selected time period in order to quickly and completely process the organic matter. One example of such a temperature and time period is to achieve an optimum temperature of 55° C. for three days. In order to achieve this, the temperature of the organic matter must be controlled, and in order to control the temperature, some means of temperature monitoring is required.

In order to control the temperature of the composting mass to the desired temperature in the horizontal composters using air to accelerate the process, a monitoring device is necessary to provide the temperature at a plurality of points throughout the mass.

Temperature monitoring devices located at the perimeter of the composting chamber cannot provide appropriate temperature readings. Thus, a temperature monitoring device or method which probes into the mass of the organic matter is desired.

A problem connected with monitoring temperature at the mid-point is related to the fact that the composting mass of organic matter moves through the composter and therefore any monitoring device used must accommodate such movement.

OBJECTS OF THE INVENTION

It is therefore an object of the present invention to provide a composting method and apparatus in which the average temperature of the mass of organic matter is monitored and controlled.

It is a related object of the present invention to provide a composting method and apparatus in which such temperature monitoring and control is achieved in a mechanically simple an inexpensive manner.

It is yet another object of the present invention to provide a composting method and apparatus in which such temperature monitoring and control accommodates the moving mass of organic matter through the chamber.

It is a further object of the present invention to provide a composting method and apparatus in which the provision of aeration air circulating through the organic matter to regulate the temperature thereof is responsive to the monitored temperature of the mass.

It is yet a further object of the present invention to provide automatic control of air circulation and penetration in response to predetermined temperature changes sensed by the temperature monitoring apparatus.

These and other objects and advantages of the present invention will be more fully brought out in the description which follows with reference to the accompanying drawings.

SUMMARY OF THE INVENTION

To achieve the foregoing objects, the present invention provides a temperature monitoring apparatus for monitoring the temperature within a mass of organic matter moved through a composting vessel by means of a compacting ram. An elongated, stationary probe extends through the vessel from one end toward the other. A plurality of temperature measuring devices are mounted along the probe. The probe may extend through the ram and be provided with a sleeve for accommodating movement of the ram relative to the probe. A decoupling device provides for decoupling of the probe from a mounting base and an extraction device permits the probe to be extracted from the vessel for replacement thereof. The probe provides a method of monitoring temperature in the mass and a method of composting by monitoring temperature in the mass and regulating the temperature in response thereto.

BRIEF DESCRIPTION OF THE DRAWINGS

FIG. **1** is a perspective view, partially cut away, of an embodiment of a composting apparatus according to the present invention;

FIG. **2** is an enlarged, fragmentary, detailed sectional view showing in closeup the relationship between the charge of organic matter and the floor of the composting apparatus;

FIG. **3** is a side view in cross-section of an embodiment of the composting apparatus of FIG. **1** taken along the line **3—3** of FIG. **1**;

FIG. **4** is a top view in cross-section of an embodiment of the composting apparatus taken along the line **4—4** of FIG. **1** and showing the control system for the composting apparatus in schematic form; and

FIG. **5** is a side view of an embodiment of the temperature probe according to the present invention.

DETAILED DESCRIPTION OF THE PREFERRED EMBODIMENTS

By way of background and introduction, a composting system of a type with which the method and appara-

tus for temperature monitoring and control may be used will first be described.

In this regard, reference numeral **10** refers generally to a composting apparatus according to the particular exemplary embodiment of the present invention as shown and described herein. Composting apparatus **10** includes a hollow vessel **12** defined by walls **14**. In the particular embodiment as shown and described, the vessel has a rectangular cross-section such that walls **14** include a floor **16**, a top wall **17**, and side walls **18** extending in parallel fashion between the floor **16** and top wall **17**. Walls **14** define a chamber **20** within vessel **12**. As will be seen from the drawings, vessel **12** and its internal chamber **20** are elongated so as to take the form of a conduit. Of course, composting apparatus **10** could be a conventional horizontally oriented composter, with top-to-bottom compost flow, which is modified and improved as discussed in greater detail below.

At one end of vessel **12** is an inlet **22** having an infeed conveyor **26**, whereby inlet **22** in conjunction with infeed conveyor **26** permits communication with chamber **20** within the vessel **12**. At the opposite end of vessel **12** is an outlet **28**.

Within chamber **20** adjacent inlet **22** is a ram **30** driven by a set of actuators **32**, which preferably are hydraulic cylinders but which could also be pneumatic cylinders or screw jacks. If actuators **32** are indeed hydraulic cylinders, they are actuated by a source **34** of pressurized hydraulic fluid shown schematically in FIG. **4**, which pressure source **34** communicates with actuators **32** via hydraulic fluid lines **35**. Preferably, the source **34** of pressurized hydraulic fluid is a pump feeding hydraulic fluid in the form of oil to actuators **32** via hydraulic line **35** to move the ram **30**.

Organic matter, such as sludge from a waste water treatment system or solid waste or garbage, is fed into the composting apparatus **10** via infeed conveyor **26** in a direction shown by arrow **37** (FIG. **1**.) The organic matter is fed into chamber **20** at the end thereof adjacent inlet **22** and is deposited in front of ram **30**. Actuators **32** are actuated to move ram **30** in a direction toward outlet **28** in order to advance the charge of organic matter **36** through composting apparatus **10**. The advancing stroke of ram **30** is shown in phantom lines in FIG. **3**.

The distance between the retracted position of ram **30** as shown in solid lines in FIG. **3** and the fully advanced position as shown in phantom lines in FIG. **3** represents the volume of one charge of organic matter **36** fed into the composting apparatus **10** during one infeed operation. After such an infeed operation, ram **30** remains in this fully advanced position until it is retracted to the solid line position shown in FIG. **3** when the next infeed operation is initiated.

As new charges of material are advanced through the vessel **12** via the infeed operation in advance of the ram **30**, earlier charges of organic matter **36** which have advanced entirely through vessel **12** and with respect to which the composting operation has been completed are discharged from vessel **12** via outlet **28**. The direction of discharge is illustrated by arrow **38** in FIG. **1**.

A temperature probe **82** is preferably formed of stainless steel and comprises a plurality of sections appropriately connected together to provide a desired length. It is contemplated that a first end **104** of probe **82** may be attached to a reaction wall **106** adjacent inlet **22** and extend through ram **30** by means of a sleeve member **108** concentrically disposed on probe **82**. Sleeve member **108** is attached to ram **30** via a collar **110**. Probe **82** extends in the direction of movement of the organic matter and terminates at a second end **112** adjacent outlet end **28** of apparatus **10**. Second end **112** includes an eyebolt **114**. In this manner, probe **82** extends through the organic matter **36** and ram **30** is permitted to move relative to probe **82** by virtue of sleeve member **108**. Thus, probe **82** is supported at first end **104** by reaction wall **106** and sleeve member **108**, and at second end **112** by the mass of organic matter **36**.

It is also contemplated, as an alternative embodiment, that at least one of such probes **82** may extend from the outlet end **28** of the vessel **12** toward the inlet end **22** and terminate just short of the advanced position of ram **30** so as not to interfere with the advancing stroke of ram **30**.

Movement of the organic matter **36** during compaction by ram **30** produces stabilizing forces on probe **82** which keep probe **82** in the same relative position in the organic matter **36**. The sliding motion of the mass along probe **36** cleans the probe surface.

Should replacement of the probe be required, a coupling **116** defined by a pair of spaced apart collars **118**, located between ram **30** and reaction wall **106**, is disconnected and a cable may be attached to the longer piece of the probe at **118**. A second cable may be attached to eyebolt **114** and may be used to pull the probe from the organic matter in the direction of outlet **28**. The first cable is pulled into the resulting hole in the compacted organic matter **36** formed by the probe **82**. Once the old probe has been removed, the first cable may be attached to a new probe and the new probe pulled toward the inlet **22** into the probe hole in the organic matter **36**. The first cable is removed and the new probe is attached at the coupling **116**.

The surface **120** of probe **82** is provided with a plurality of temperature measure devices (TMD's) **83** in such a manner that a group of preferably three TMD's **83** are provided in each zone (to be described later) in a manner such that one TMD is centrally positioned in each zone and adjacent TMD's are equally spaced on opposite sides of the centrally positioned TMD. Examples of TMD's include thermocouples and resistance temperature devices. The three TMD's in each zone are preferably wired in parallel to provide an average readout for each zone. By using three TMD's per zone, the probe **82** will still provide a signal representing the temperature of a zone in the event of failure of one or two of the TMD's in that zone. Wires **122** from the TMD's **83** extend through probe **82** and exit at conduit **124** adjacent first end **104**.

If desired, a plurality of probes **82** may be used in one composter, the key being that all such probes **82** extend along the composter in the direction of movement of the organic matter **36**, i.e., the axis of each probe **82** is parallel with the direction of movement of the mass of organic matter **36**.

Probe **82** of the type described above may be used in connection with a vessel **12** including in the floor **16**, a set of floor-mounted diffusers or orifices **40** distributed along virtually the entire length of vessel **12** for providing aeration air thereto. These diffusers **40** communicate with chamber **20** of vessel **12** to permit pressurized air to be injected into chamber **20**. The air injection is accomplished via air passages **42** in floor **16**, which air passages are fed by an air header **43** disposed in outlet vessel **12**. Thus, air header **43** communicates with the series of air passages **42** which, in turn, communicate with diffusers **40** for injecting air into chamber **20**.

In the particular exemplary embodiment shown, there is a source of aeration air. This source provides air for effecting aeration and temperature control of the organic matter **36** to convert it to compost in a known manner. The aeration air is generated by a blower **51** driven by electric motor **52**. Aeration air is fed into air header **43** to then pass through air passages **42** in floor **16** of chamber **20** and thence through diffusers **40** for aeration of the organic matter **36** to aid in composting.

A selected portion of the set of diffusers or orifices **40** may act as suction orifices or inlets for return of aeration air which has been introduced into the organic matter **36** by others of the diffusers or orifices **40**. By providing that some of the orifices **40** act as air returns, circulation through the organic matter **36** may be improved and the temperature better regulated.

This aeration air return is accomplished via a suction fan **54** driven by a motor **56**. Suction fan **54** pulls air through valve **200** and communicates with the suction header **58** which, in turn, selectively communicates with a certain portion of the air passages **42**. When certain of the air passages **42** are in communication with suction header **58**, air passages **42** then act as air returns for drawing aeration air from organic matter **36** to enhance circulation of aeration air.

Selection of which of orifices **40** will act as diffusers for introducing aeration air into chamber **20** and which of orifices **40**, and associated air passages **42**, will act as air returns is determined by a series of valves **60**, preferably in the form of electronically controlled valves such as solenoid valves. Preferably, too, such a valve **60** will be disposed between each air passage **42** and the air header **43** and suction header **58**. Separate zones (previously mentioned) of pressure and suction diffusers may be provided. In the particular exemplary embodiment shown and described, there are five zones of four air passages per zone. Each zone may correspond generally with a charge of material fed into vessel **12** by one infeed operation and one stroke of ram **30**. Alternatively, a zone may hold more or less than one charge of material. For example, certain conventional composters have approximately three charges located in a particular zone at a given time. Regardless of the amount of material therein, one such zone may be put under pressure, the next under suction, and so on in an alternating fashion.

The aeration air system includes an aeration control **64** coupled with the valve **49** and/or the blower **51** which produces aeration air, and more specifically with the motor **52** of that blower. Aeration control **64** is preferably electronic and sends electrical signals to valve **49** and/or motor **52** of blower **51** to regulate the intensity of aeration air produced by blower **51**.

Just as the sources of aeration air have controls, so too the source of suction air, i.e., the valve **200** and/or the suction fan **54** driven by motor **56**, has a suction air control **66** for energizing motor **56** of suction fan **54** and for regulating its/their operation. Preferably, too, suction air control **66** is electronic.

It is preferred that both of the controls **64** and **66** be coupled with a master controller **70** shown schematically in FIG. **4**. Master controller **70** acts as a central station from which aeration air and suction air may be controlled.

Master controller **70** is connected to the aeration system via line **74** running to aeration control **64**. In turn, aeration-producing control **64** is coupled to motor **52** of blower **51** via line **75** and/or connected to valve **49** via line **201**. The master controller **70** is preferably also coupled with valves **60** which determines the pattern of which air passages **42** and orifices **40** are under pressure and which, if any, are under suction. In this regard, master controller **70** provides the appropriate signals to valves **60** over a line **76** (FIG. **4**). Master controller **70** controls the suction air by sending signals to suction control **66** over line **78**. In turn, suction control **66** is coupled with motor **56** of suction fan **54** by line **79** and/or with valve **200** by line **202**. Master control **70** also controls the operation of the ram **30** which is driven by hydraulic cylinders **32**. Further, master controller **70** requires input from temperature probe **82**.

The pattern of aeration utilizing pressure or pressure and suction for air passages **42** and their orifices **40** will be determined in part by the temperature of the mass of organic matter **36** as measured by temperature probe **82**. Thus, temperature probe **82** preferably extends axially along the geometric center of chamber **20** between inlet **22** and outlet **28** to measure the temperature of the organic matter **36** in the various zones of the composting apparatus **10**. Signals from the temperature measuring devices **83** in each zone along the length of the probe **82** are preferably fed from wires **122** back over line **84** to master controller **70** to actuate the aeration air in a pattern (e.g., all pressure or a combination of pressure and/or suction) and at an intensity which will produce an optimum temperature in the organic mass as determined by experience and/or by an algorithm or program utilized by master controller **70**. Of course, the ability to accomplish this is generally enhanced by temperature probe **82** which provides an accurate measurement of temperature deep within the mass of organic matter without interfering with the flow of organic matter through the composting apparatus.

A suitable temperature control such as a PID (proportional integral derivative) type controller can be incorporated into master controller **70** to receive temperature information via the temperature measuring devices **83** in a given zone or zones of probe **82** and, in response to an undesirable temperature of the organic matter **36** in that zone or zones, controller **70** may automatically actuate one or more of the blower **51**, valve **49**, suction fan **54** and valve **200** in combination with actuating appropriate valves **60** to cause orifices **40** to act as suction orifices or inlets thereby improving the circulation of aeration air through the organic matter **36** in order to maintain a desired temperature at the appropriate zone or zones penetrated by probe **82**.

Although the invention has been described with reference to a specific exemplary embodiment, it is to be understood that many modifications, variations and equivalents are possible within the scope of the appended claims.

What is claimed is:

1. A method of composting by monitoring the temperature of a mass of organic matter moved through a composting vessel and regulating the temperature in response thereto, including the steps of:

surrounding at least one elongated probe with a mass of organic matter to be composted;

moving the mass of organic matter through the composting vessel in the same direction as that in which the elongated probe extends;

measuring the temperature of the interior of the mass of organic matter at a plurality of locations along the probe; and

regulating the temperature in the vessel by temperature regulating means coupled with said probe.

2. The method of claim 1, wherein the organic matter is moved by a ram.

3. The method of claim 2, including the additional step of:

mounting a bearing on the probe for accommodating movement of the ram relative to the stationary probe.

4. A method of monitoring temperature in a mass of organic matter moved through a composting vessel, including the steps of;

surrounding at least one elongated probe with a mass of organic matter to be composted;

moving the mass of organic matter through the composting vessel in the same direction as that in which the elongated probe extends; and

measuring the temperature of the interior of the mass of organic matter at a plurality of locations along the probe.

5. A composting apparatus for accelerated aerobic decomposition of organic matter, the apparatus comprising:

a composting vessel through which the organic matter is moved to effect composting;

at least one elongated probe extending from a first end of said vessel toward a second end of said vessel such that, when said vessel is filled with organic matter, said probe is supported by the moving organic matter;

means for aerating the organic matter as it moves through said composting vessel; and

a plurality of temperature measuring devices mounted along the probe.

6. The apparatus of claim 5, wherein the probe is stationary.

7. The apparatus of claim 5, including:

means for extracting the probe from the vessel for replacement thereof.

8. A composting apparatus for accelerated aerobic decomposition of organic matter, the apparatus comprising:

a composting vessel;

a ram for moving the organic matter from a first end of said vessel toward a second end thereof;

at least one elongated probe extending from said first end of said vessel toward said second end of said vessel such that, when said vessel is filled with organic matter, said probe is supported by the moving organic matter;

means for aerating the organic matter as it moves through said composting vessel;

a plurality of temperature measuring devices mounted along the probe; and

means mounted on the ram for accommodating movement of the ram relative to the probe.

9. The apparatus of claim 8, wherein the plurality of temperature measuring devices are spaced apart in groups.

10. The apparatus of claim 8, wherein the probe includes a decoupling device adjacent the first end of the vessel and an extraction device adjacent the second end of the vessel.

11. The apparatus of claim 8, wherein said means mounted on the ram comprises a sleeve having a flange for connection to the ram.

12. The apparatus of claim 8, wherein the probe is stationary.

13. A composting apparatus for accelerated aerobic decomposition of organic matter, the apparatus comprising:

a vessel having a chamber defined therein;

an inlet to said chamber of said vessel and an outlet from said chamber of said vessel, said chamber having a lengthwise axis;

a ram connected with said vessel, said ram being movable with respect to said vessel for compacting and moving organic matter deposited in said chamber from said inlet toward said outlet in the direction of the lengthwise axis;

a temperature probe mounted in said vessel and extending through said chamber in a direction substantially parallel to said lengthwise axis such that, when said vessel is filled with organic matter, said probe is supported by the moving organic matter

a plurality of temperature measuring devices mounted along said probe;

means for aerating the organic matter as it moves through the composting vessel; and

means for regulating the temperature in said chamber, said temperature regulating means being coupled with said probe.

14. The apparatus of claim 13, wherein said chamber is elongated and has a rectangular cross-section.

15. The apparatus of claim 14, wherein said probe extends through the geometric center of said cross-section and coaxially with respect to said lengthwise axis.

16. The apparatus of claim 13, including:

a sleeve slidably mounted on said probe, said sleeve being mounted in said ram to permit said ram to move relative to said probe.

17. The apparatus of claim 16, wherein a first end of said probe is mounted in a wall adjacent said ram, said probe extending through said ram via said sleeve.

18. The apparatus of claim 12, including:

an eyebolt connected to a second end of said probe opposite said first end.

* * * * *