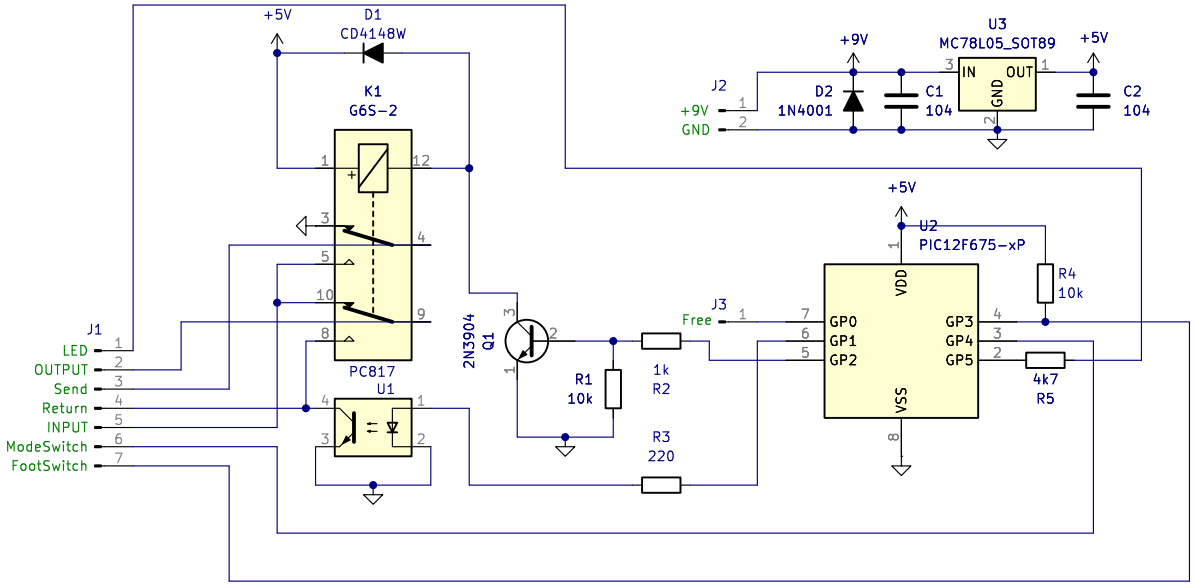

1x telescope

Sheet: /

File: M01_forUnLatch.kicad_sch

Title: Module01_forUnlatch

Size: A5	Date: 2024-07-25	**Rev: 1.0**
KiCad E.D.A. 8.0.4		Id: 1/1