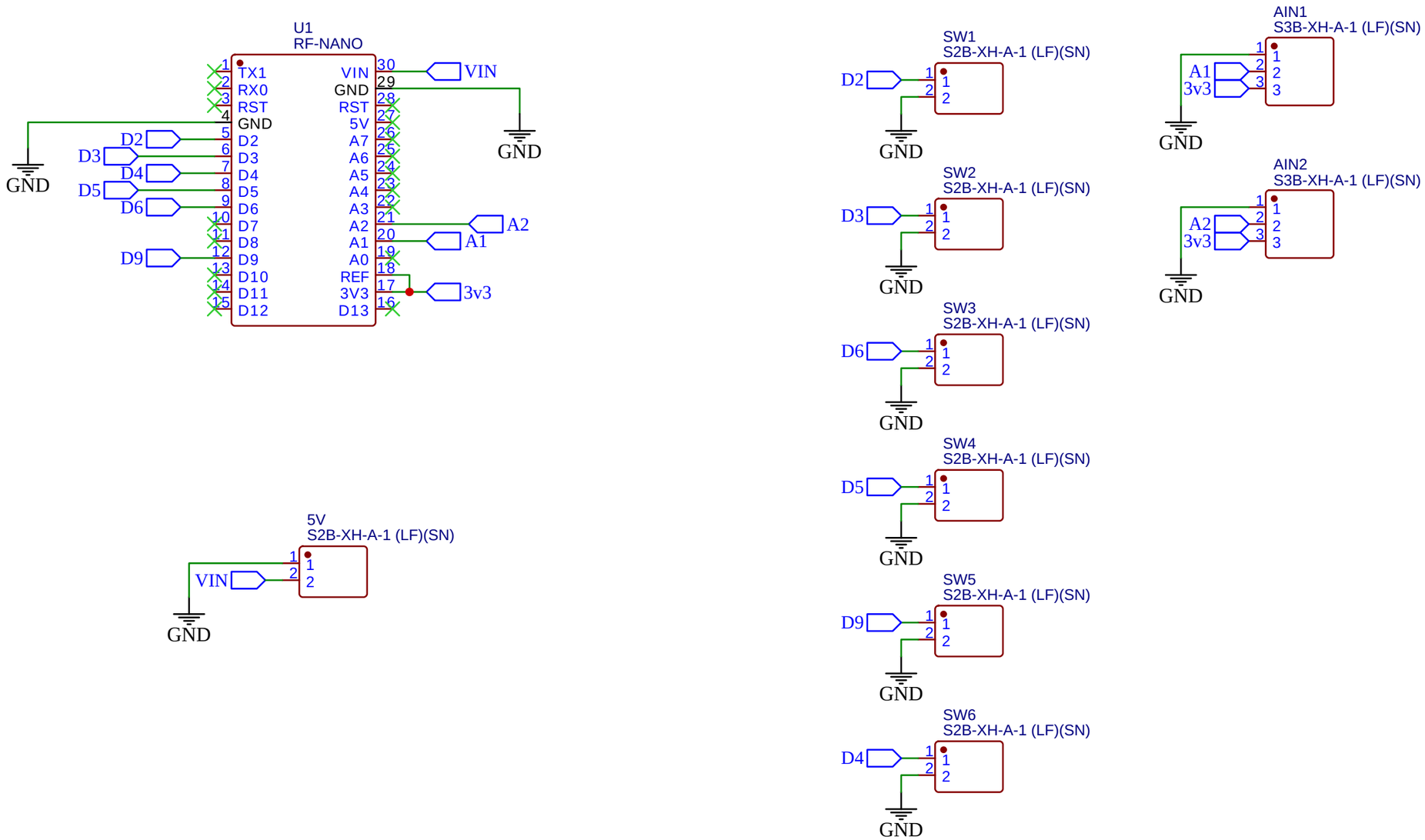

TITLE: Simagic-rf-nano-wheel		REV: 0.2
EasyEDA	Company: Andrew Taylor	Sheet: 1/1
	Date: 2025-04-05 Drawn By: ataylor	