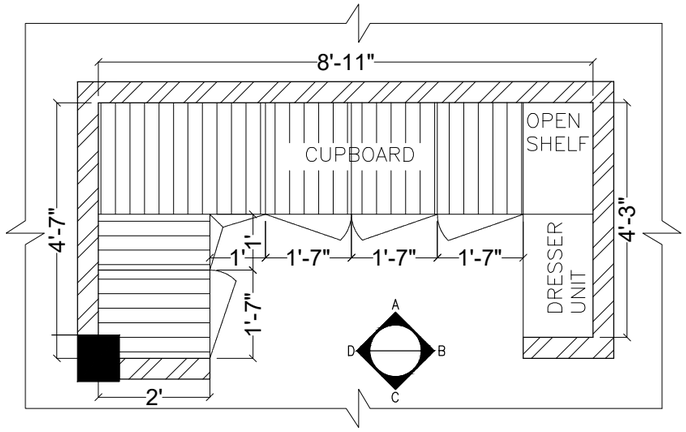

01 LAYOUT PLAN
SCALE-NTS

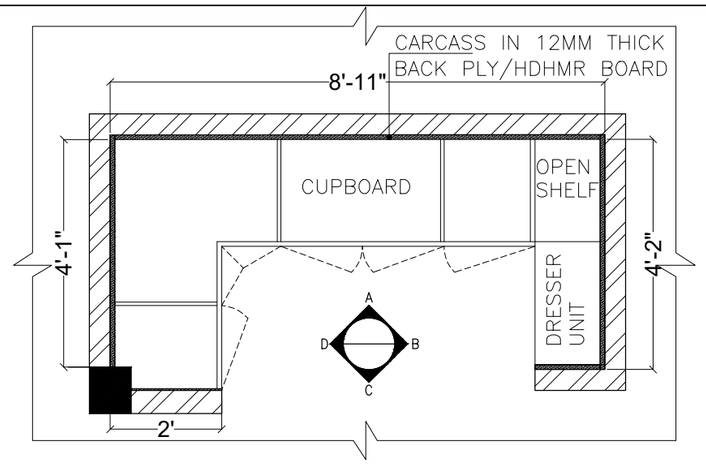

02 TOP VIEW
SCALE-NTS

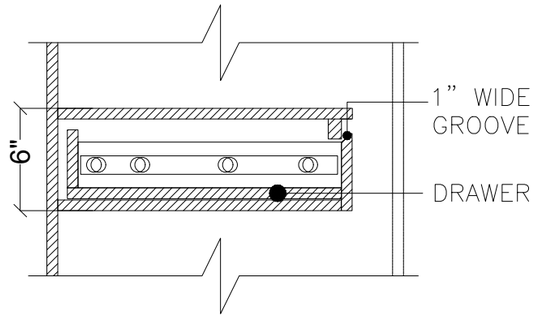

03 DETAIL-B
SCALE-NTS

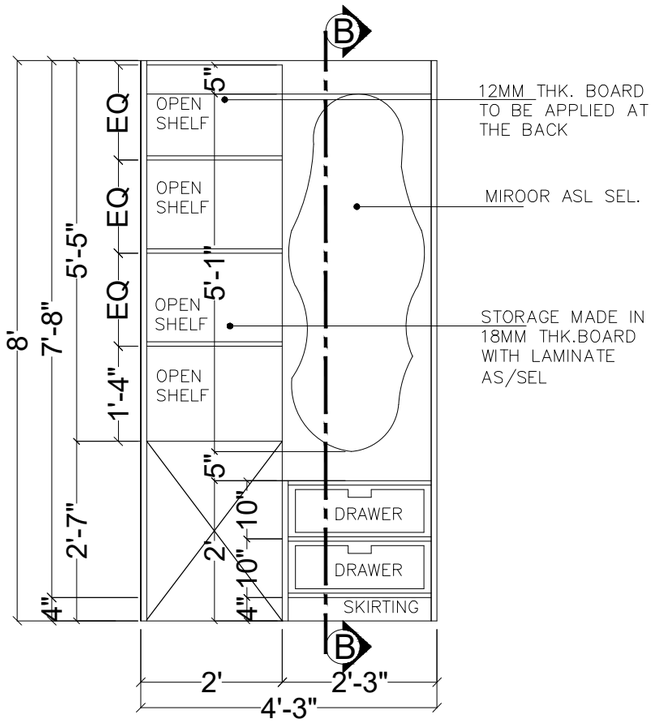

04 ELEVATION B'
SCALE-NTS

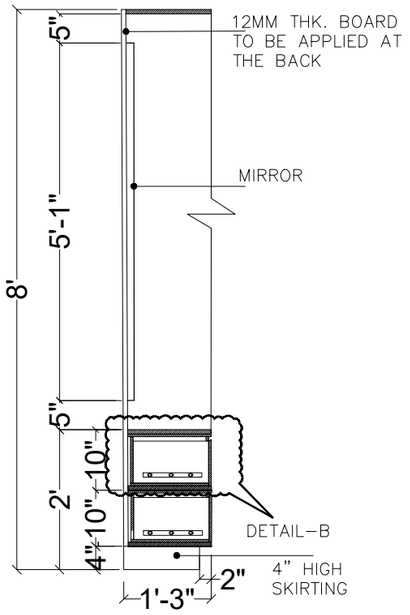

05 SECTION- B-B'
SCALE-NTS

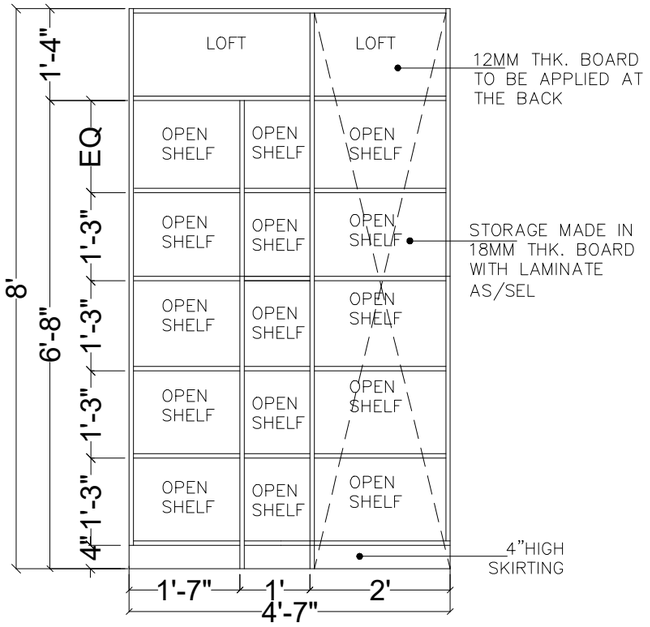

06 ELEVATION C'
SCALE-NTS

07 REFRENCE IMAGE
SCALE-NTS

ARCHITECTS C:\Users\archi\OneDrive\Desktop\TAG LINE.jpeg *Architects, Interior Designer, Landscape Designer, & Structural Desiner* Head, Off.: F-52,1st Floor,Near Gurudwara,Madhu Vihar,I.P Extension, Delhi-110092	Architect: **AR PRABHAT ARYA** Sign: Date:	Client: **MRS.NEHA PAHUJA**	Project Title: **RESIDENCE** **AT** **IP EXT.ARUNA APARTMENT**	Drawing Title: FIRST FLOOR MASTER BEDROOM CUPBOARD DETAIL LAYOUT PLAN	Scale:	NTS	Drawn:	SUMIT
					Date:	2026.04.24	Checked:	Ar. Yojna
					Proj No:		Dwg No:	DT_1003
					Rev. No:	–	Rev. Date:	–
					File Name:			

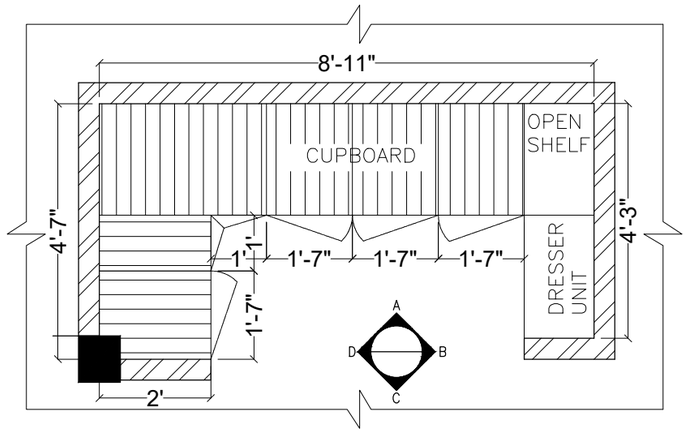

01 LAYOUT PLAN
SCALE-NTS

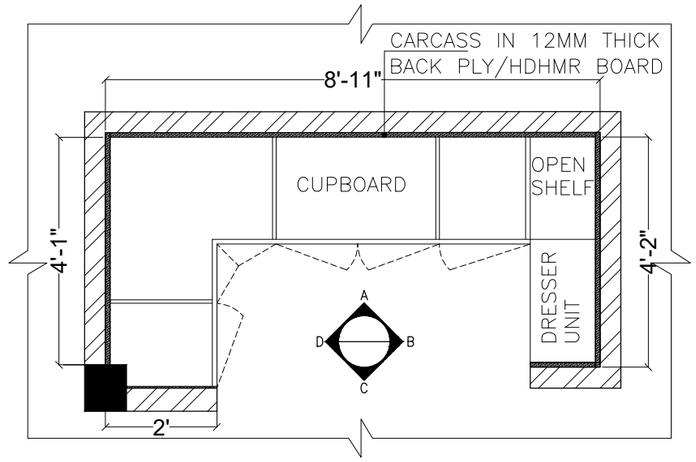

02 TOP VIEW
SCALE-NTS

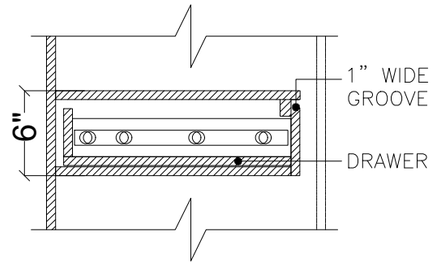

03 DETAIL-A
SCALE-NTS

04 REFRENCE IMAGE
SCALE-NTS

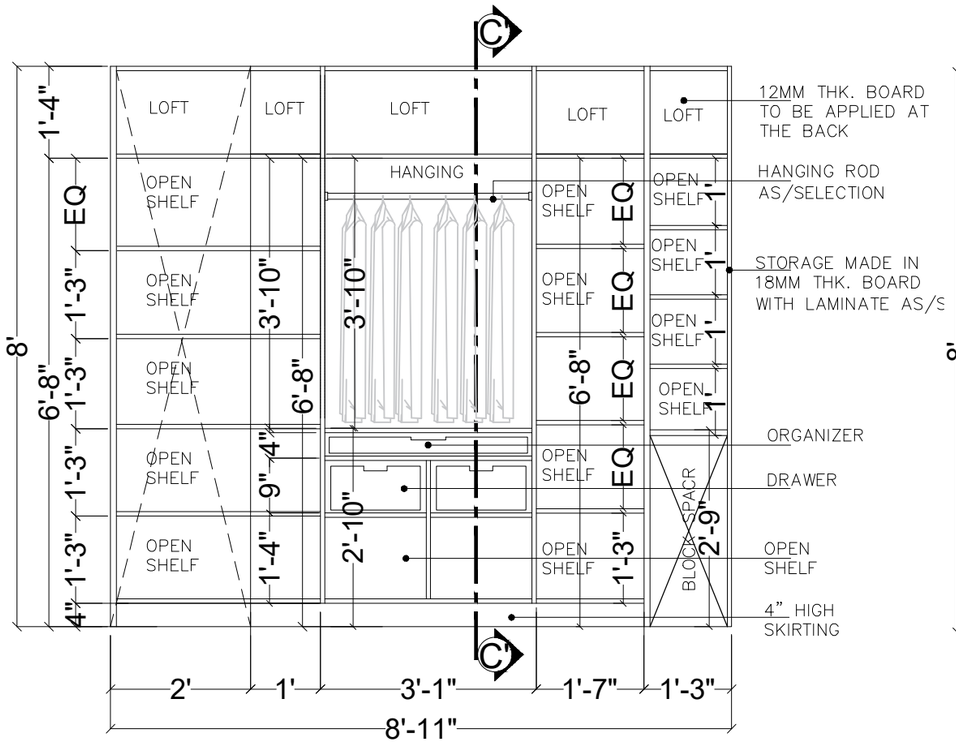

05 ELEVATION A'
SCALE-NTS

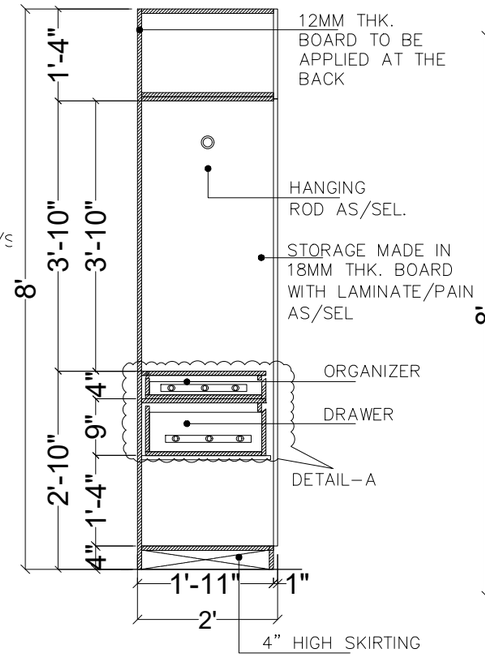

06 SECTION- C-C'
SCALE-NTS

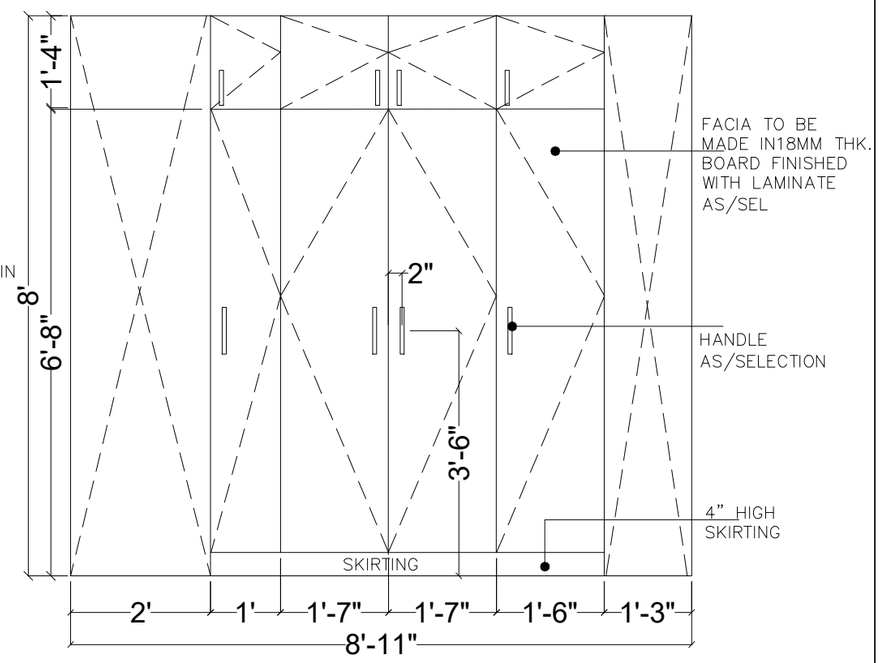

07 FRONT ELEVATION
SCALE-NTS

ARCHITECTS C:\Users\archi\OneDrive\Desktop\TAG LINE.jpeg *Architects, Interior Designer, Landscape Designer, & Structural Desiner* Head, Off.: F-52,1st Floor,Near Gurudwara,Madhu Vihar,I.P Extension, Delhi-110092	Architect: **AR PRABHAT ARYA** Sign: Date:	Client: **MRS.NEHA PAHUJA**	Project Title: **RESIDENCE** **AT** **IP EXT.ARUNA APARTMENT**	Drawing Title: FIRST FLOOR MASTER BEDROOM CUPBOARD DETAIL LAYOUT PLAN	Scale:	NTS	Drawn:	SUMIT
					Date:	2026.04.24	Checked:	Ar. Yojna
					Proj No:		Dwg No:	DT_1003
					Rev. No:	–	Rev. Date:	–
					File Name:			

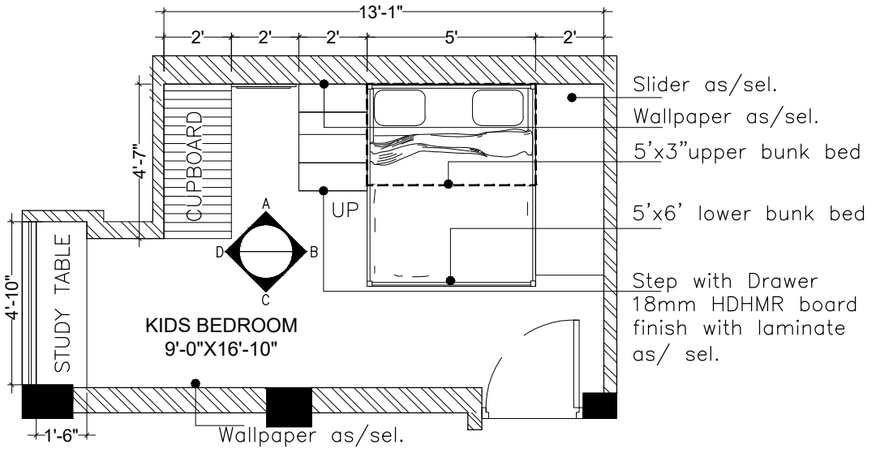

01 LAYOUT PLAN
SCALE-NTS

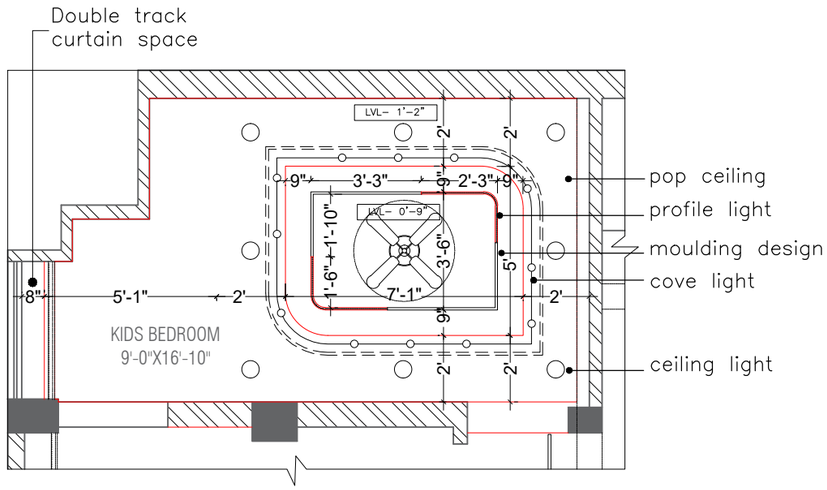

02 CEILING PLAN
SCALE-NTS

03 3D VIEW
SCALE-NTS

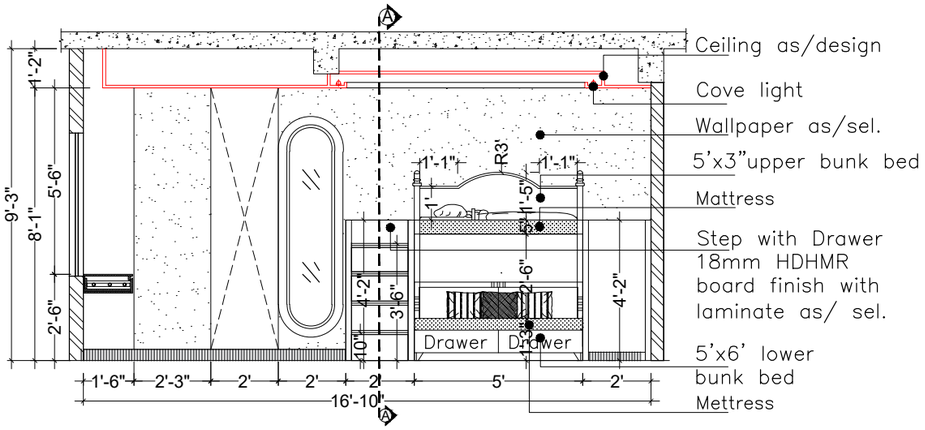

04 ELEVATION A-A'
SCALE-NTS

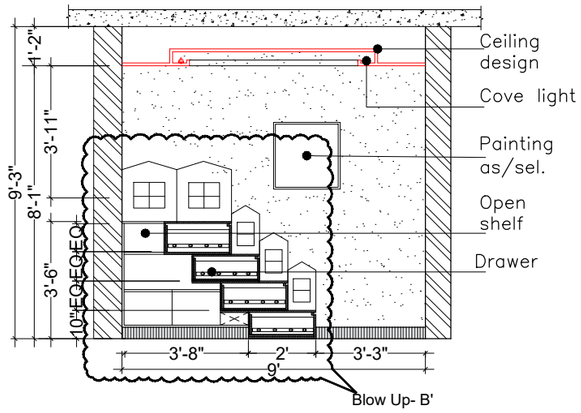

05 DETAIL- AA'
SCALE-NTS

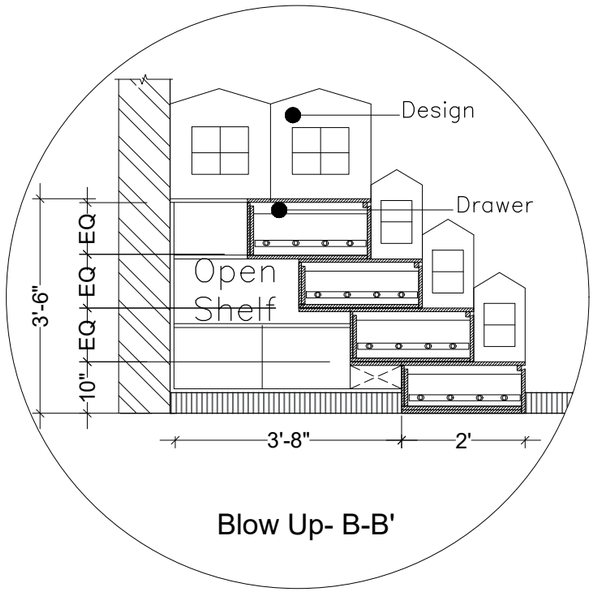

Blow Up- B-B'

ARCHITECTS Architects, Interior Designer, Landscape Designer, & Structural Desiner Head, Off.; F-52,1st Floor,Near Gurudwara,Madhu Vihar,I.P Extension, Delhi-110092	Architect: **AR PRABHAT ARYA**	Client: **MRS.NEHA PAHUJA**	Project Title: **RESIDENCE** **AT** **IP EXT.ARUNA APARTMENT**	Drawing Title: FIRST FLOOR KIDS BEDROOM WALL ELEVATION	Scale:	NTS	Drawn:	SUMIT
					Date:	2026.04.24	Checked:	Ar. Yojna
					Proj No:		Dwg No:	DT_1001a
					Rev. No:	–	Rev. Date:	–
	Sign:	Date:			File Name:			

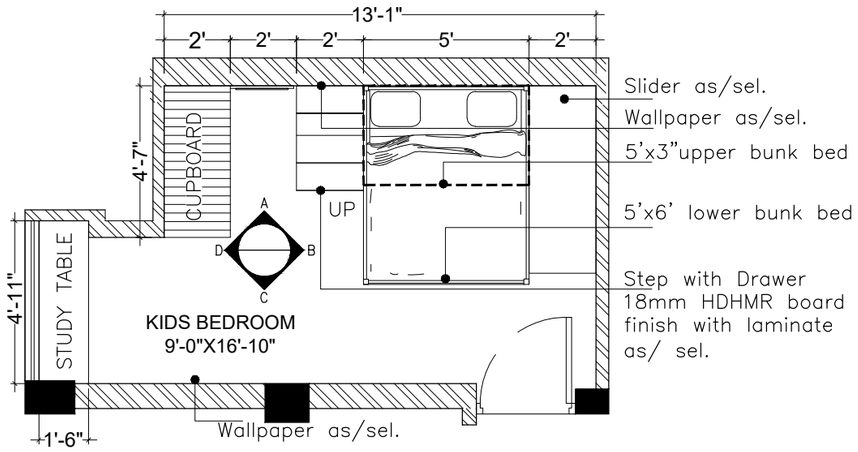

01 LAYOUT PLAN
SCALE-NTS

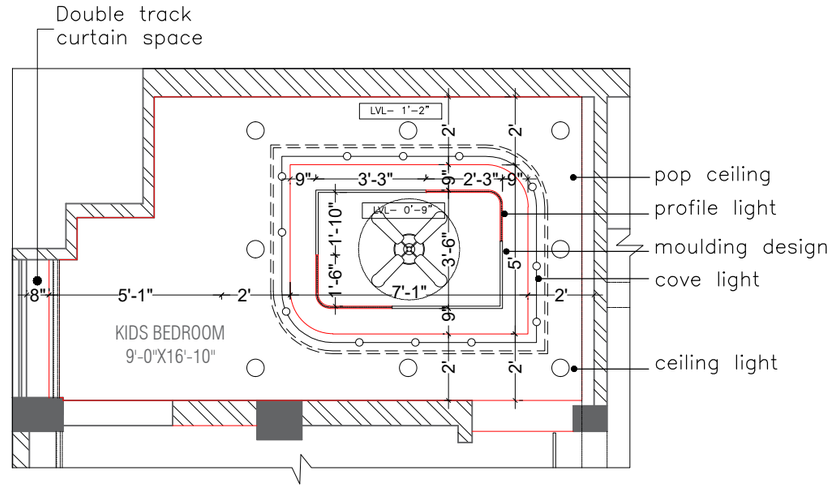

02 CEILING PLAN
SCALE-NTS

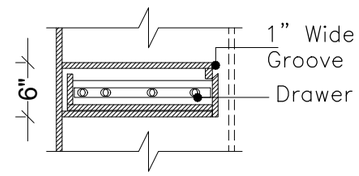

02 DETAIL-A
SCALE-NTS

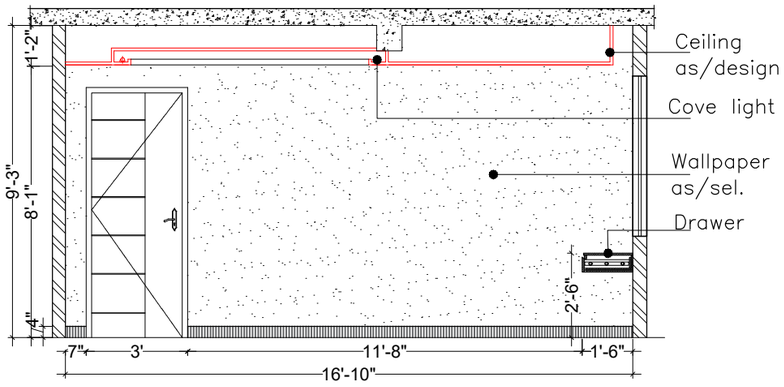

03 ELEVATION C-C'
SCALE-NTS

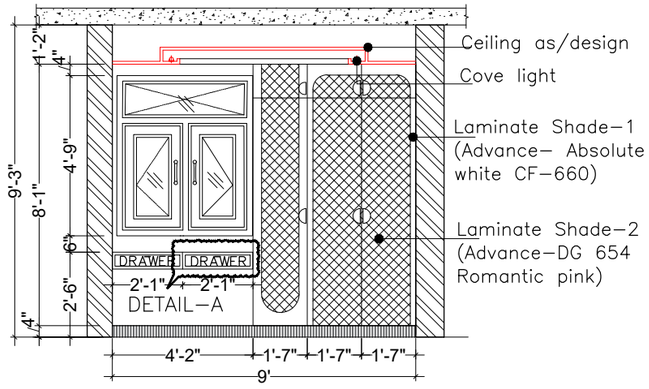

05 ELEVATION D-D'
SCALE-NTS

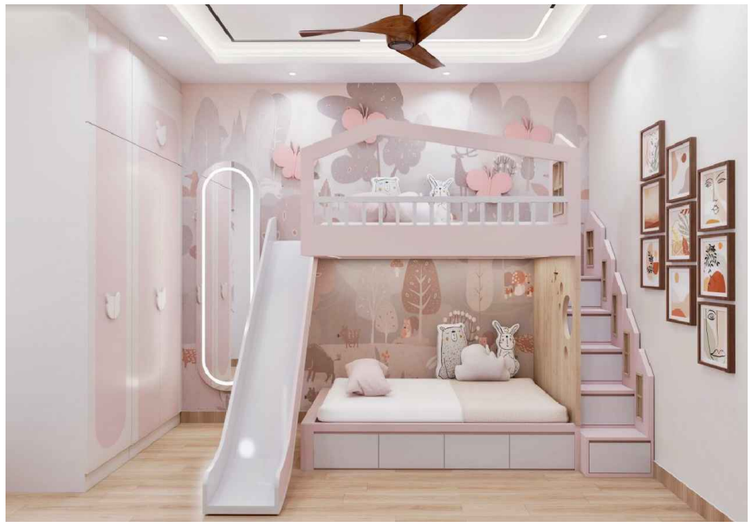

03 3D VIEW
SCALE-NTS

ARCHITECTS C:\Users\G3\Users\archi\OneDrive\Desktop\TAG LINE.jpeg *Architects, Interior Designer, Landscape Designer, & Structural Desiner* Head, Off.; F-52,1st Floor,Near Gurudwara,Madhu Vihar,I.P Extension, Delhi-110092	Architect: **AR PRABHAT ARYA** Sign: Date:	Client: **MRS.NEHA PAHUJA**	Project Title: **RESIDENCE** **AT** **IP EXT.ARUNA APARTMENT**	Drawing Title: FIRST FLOOR KIDS BEDROOM WALL ELEVATION	Scale:	NTS	Drawn:	SUMIT
					Date:	2026.04.24	Checked:	Ar. Yojna
					Proj No:		Dwg No:	DT_1001a
					Rev. No:	–	Rev. Date:	–
					File Name:			

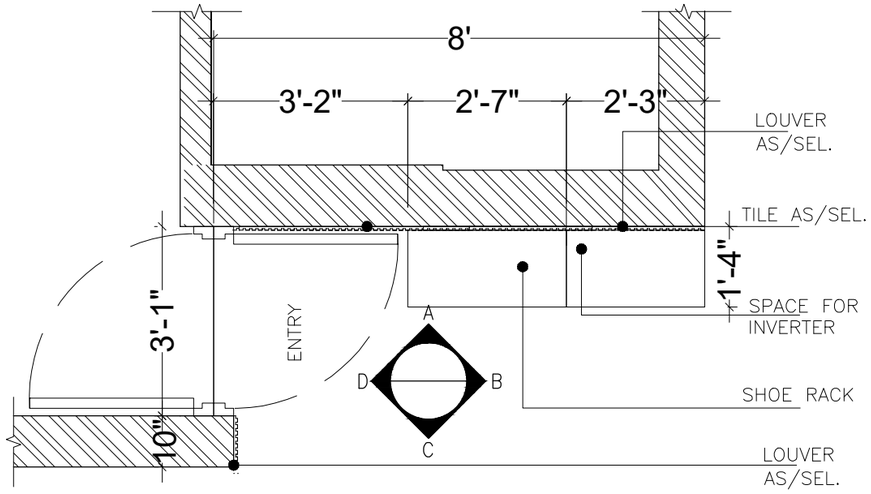

01 LAYOUT PLAN
SCALE-NTS

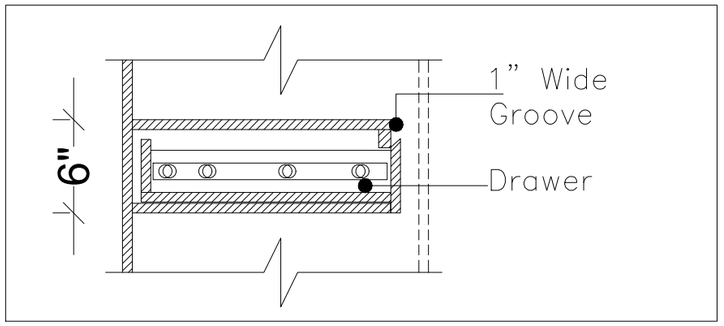

02 DETAIL-A
SCALE-NTS

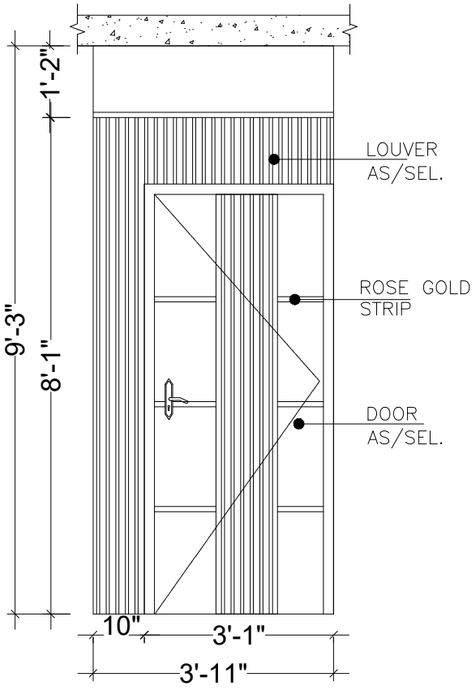

03 ELEVATION B-B'
SCALE-NTS

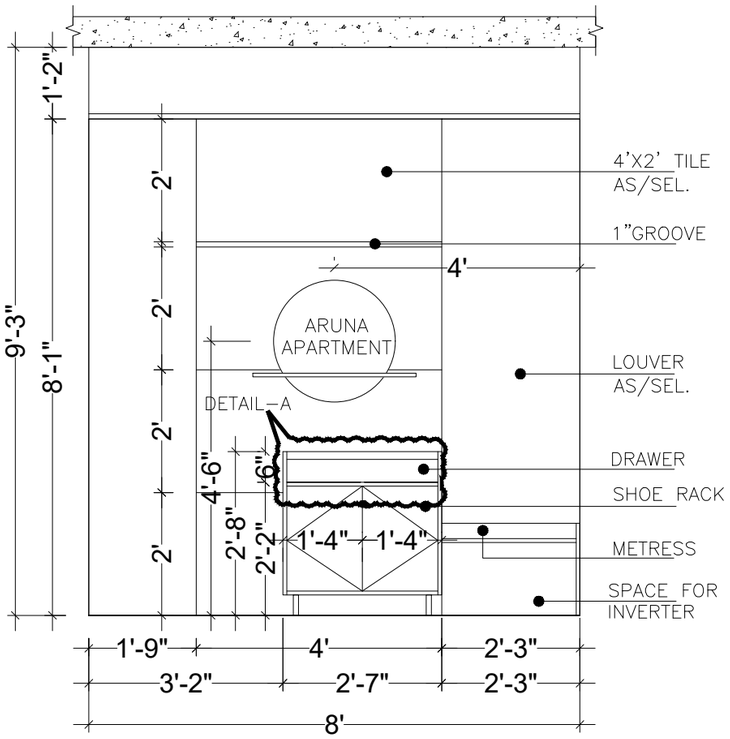

04 ELEVATION C-C'
SCALE-NTS

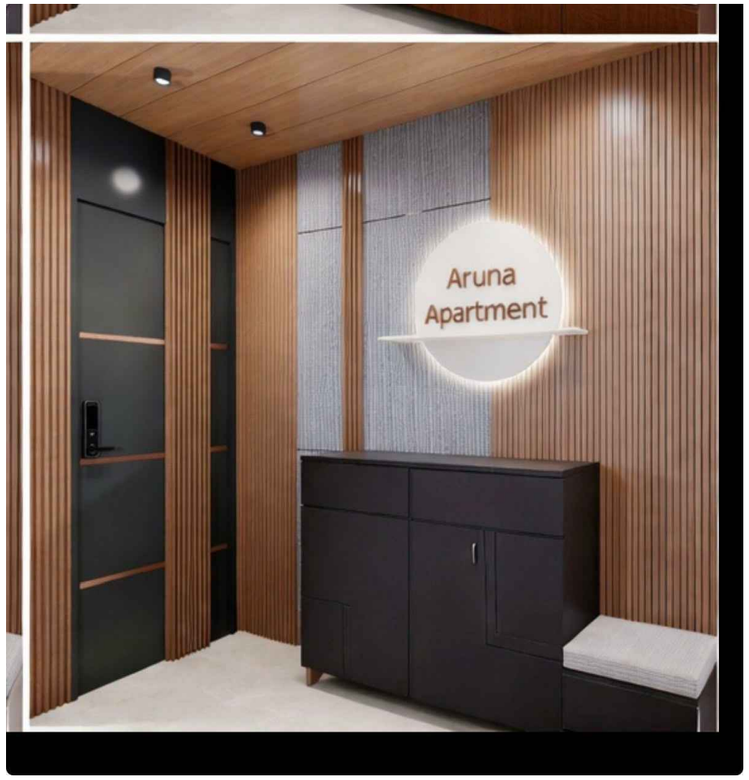

05 3D VIEW
SCALE-NTS

ARCHITECTS C:\Users\G10\Pictures\Screenshots\Desktop\FAGLINE.jpeg *Architects, Interior Designer, Landscape Designer, & Structural Desiner* Head, Off.: F-52,1st Floor,Near Gurudwara,Madhu Vihar,I.P Extension, Delhi-110092	Architect: **AR PRABHAT ARYA** Sign: Date:	Client: **MRS.NEHA PAHUJA**	Project Title: **RESIDENCE** **AT** **IP EXT.ARUNA APARTMENT**	Drawing Title: FIRST FLOOR MAIN ENTRY WALL ELEVATION PLAN	Scale:	NTS	Drawn:	SUMIT
					Date:	2026.04.24	Checked:	Ar. Yojna
					Proj No:		Dwg No:	ELE_1001a
					Rev. No:	–	Rev. Date:	–
					File Name:			

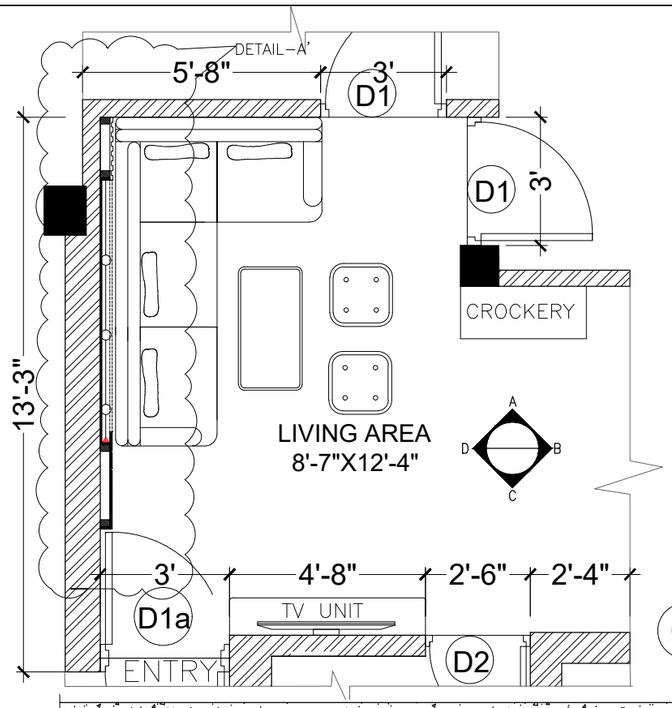

01 TOP VIEW
SCALE-NTS

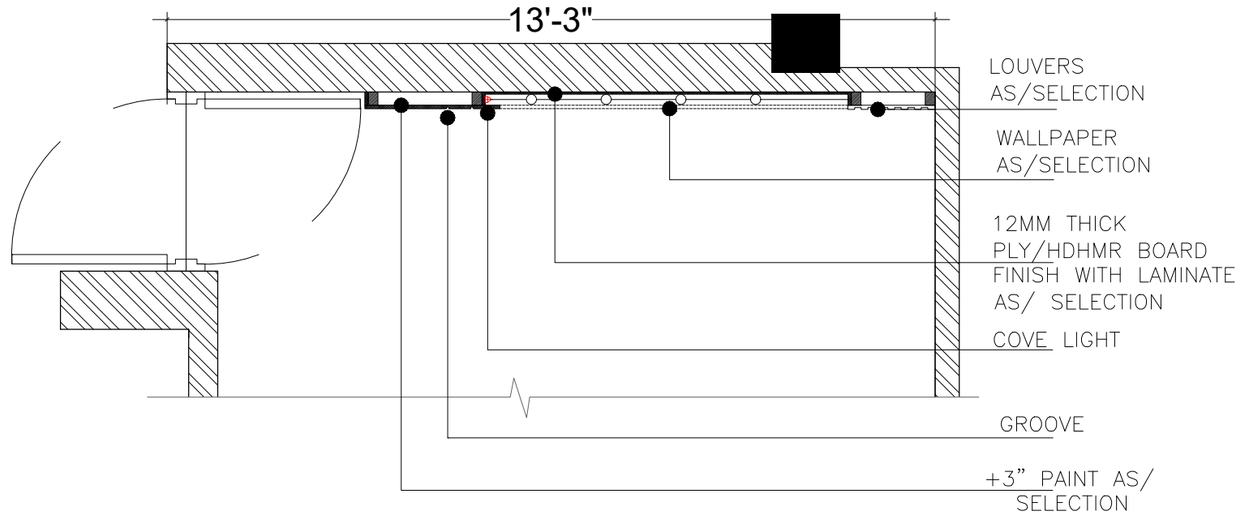

02 Dtail A-A'
SCALE-NTS

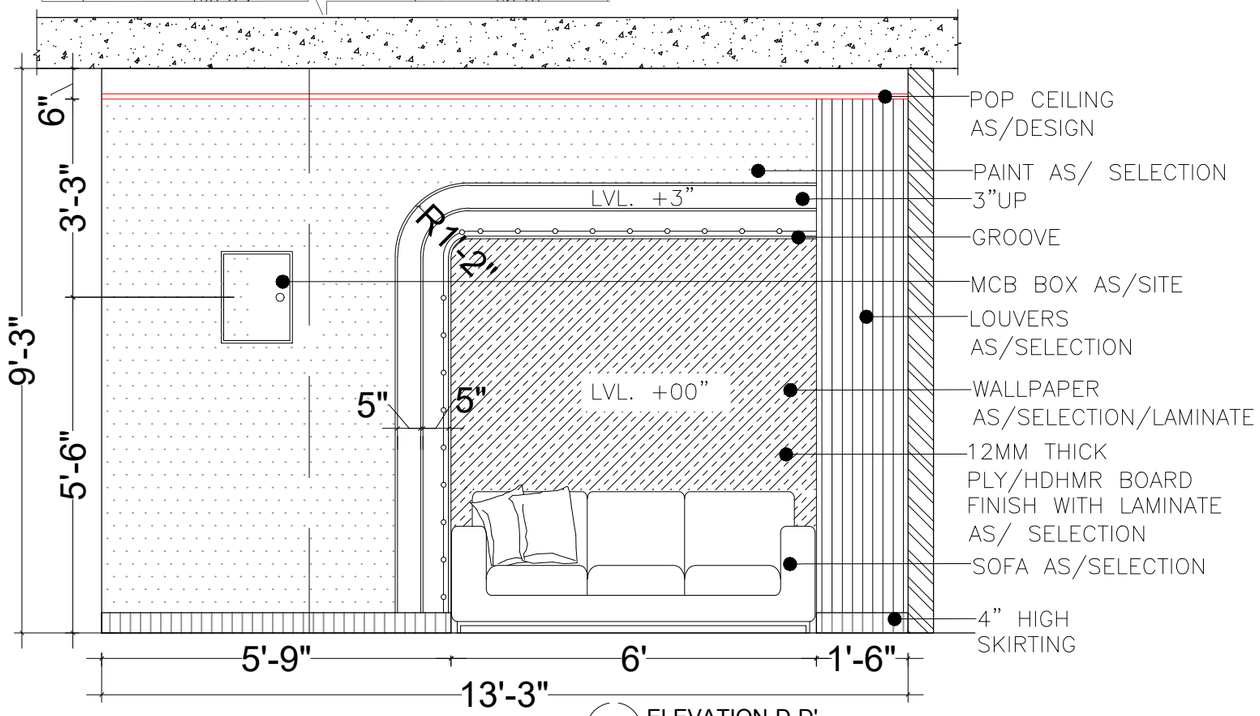

03 ELEVATION-D-D'
SCALE-NTS

03 3D VIEW
SCALE-NTS

ARCHITECTS ArchitectsHive REDEFINING THE LIMITS OF ARCHITECTURE *Architects, Interior Designer, Landscape Designer, & Structural Desiner* Head, Off.: F-52,1st Floor,Near Gurudwara,Madhu Vihar,I.P Extension, Delhi-110092	Architect: **AR PRABHAT ARYA** Sign: Date:	Client: **MRS.NEHA PAHUJA**	Project Title: **RESIDENCE** **AT** **IP EXT.ARUNA APARTMENT**	Drawing Title: FIRST FLOOR LIVING AREA WALL ELEVATION	Scale:	NTS	Drawn: Sunakshi
					Date:	2026.04.24	Checked: Ar. Yojna
					Proj No:		Dwg No: DT_1003
					Rev. No:	–	Rev. Date: –
					File Name:		

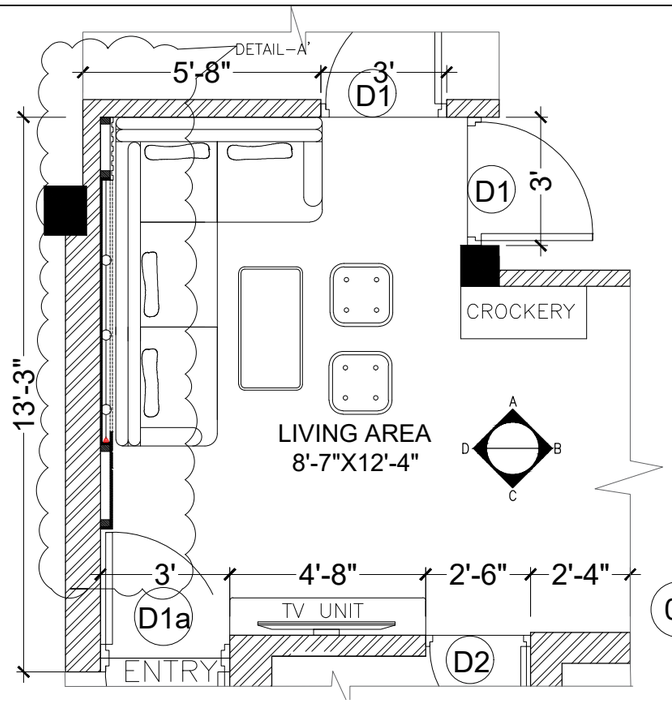

01 TOP VIEW
SCALE-NTS

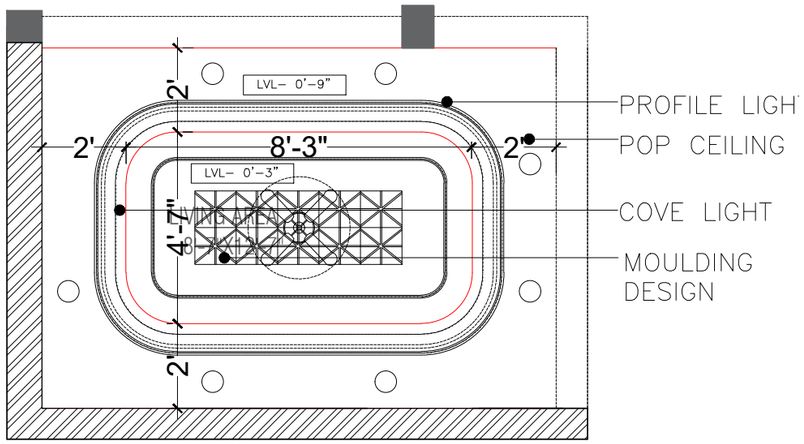

02 CEILING
SCALE-NTS

03 3D VIEW
SCALE-NTS

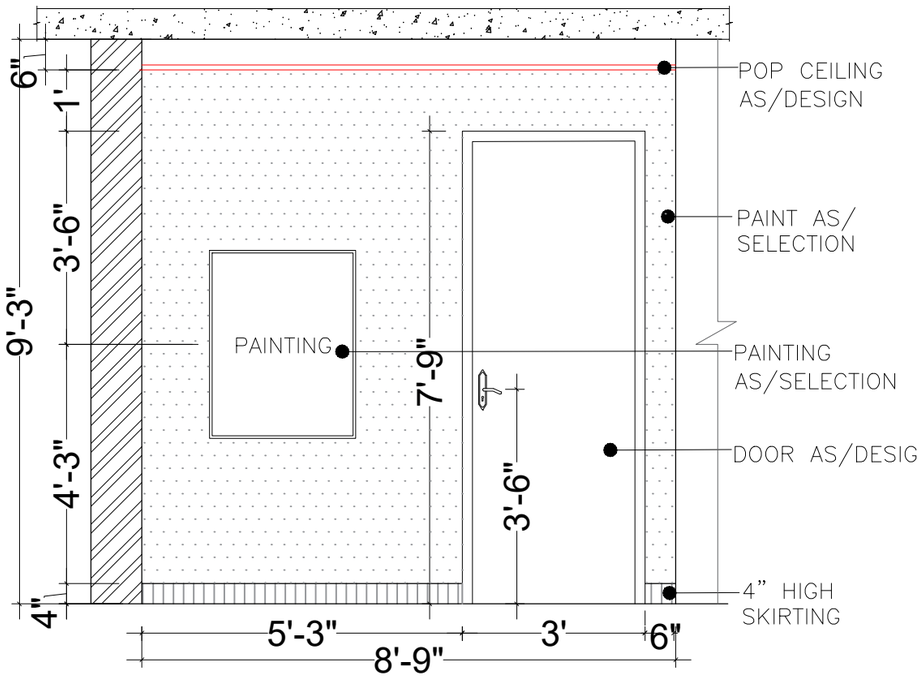

04 ELEVATION-A
SCALE-NTS

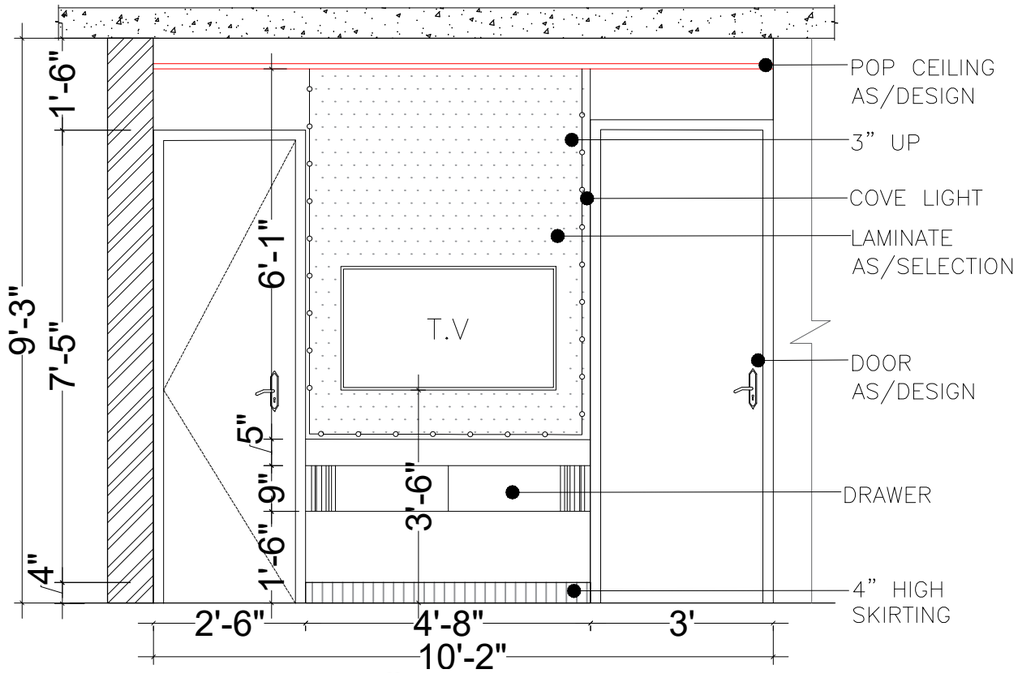

05 ELEVATION-C'
SCALE-NTS

ARCHITECTS ARCHITECTSHIVE REDEFINING THE LIMITS OF ARCHITECTURE *Architects, Interior Designer, Landscape Designer, & Structural Desiner* Head, Off.: F-52,1st Floor,Near Gurudwara,Madhu Vihar,I.P Extension, Delhi-110092	Architect: **AR PRABHAT ARYA** Sign: Date:	Client: **MRS.NEHA PAHUJA**	Project Title: **RESIDENCE** **AT** **IP EXT.ARUNA APARTMENT**	Drawing Title: FIRST FLOOR LIVING AREA WALL ELEVATION	Scale:	NTS	Drawn:	Sunakshi
					Date:	2026.04.24	Checked:	Ar. Yojna
					Proj No:		Dwg No:	DT_1003
					Rev. No:	–	Rev. Date:	–
					File Name:			