ECE315 Introductory Microprocessor Laboratory

Lab 2

Schematic Capture

1. Introduction

In Lab 1, you created schematic symbols and PCB footprints for several components. In this lab, you will place and connect those components in a series of schematic sheets. Schematic sheets represent the components found in your embedded system and how they are connected to one another. Embedded systems engineers examine a product in order to select the components used in a design. In this lab, the components have been selected for you and you will be given guidance as to how to interconnect the various components.

2. Set the Grid Spacing in the Schematic Editor.

Most schematic symbols use a unit of measurement called a mil. A mil is an imperial unit of measurement that is equal to one thousandth of an inch. Before you place any parts, make sure that your grid spacing in the schematic editor is set to 100 mils

Type **vgs** when in the schematic editor. Then set the grid size to 100mils. Again, make sure to use **mils** and NOT mm.

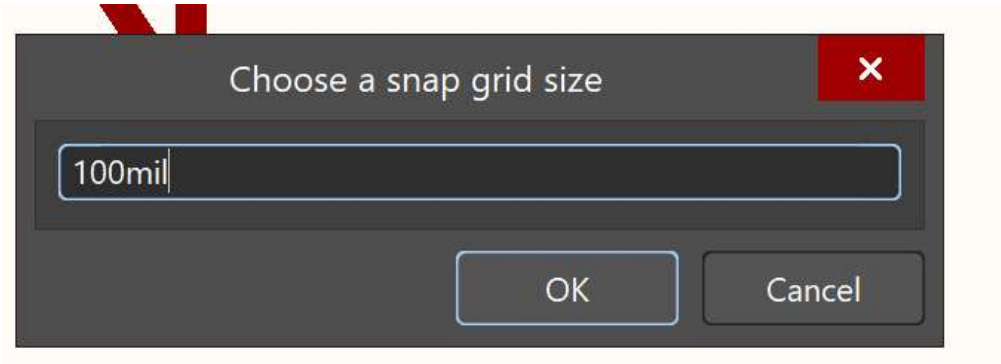

3. 02_LEDs

You will need to complete the schematic page on 02_LEDs in the default project. Use the following document to place a component.

- One (1) serial LED from ECE315.SchLib
- One (1) 0.1uF capacitor, PN: **CC1206KRX7R8BB104** from the Manufacturer Part Search

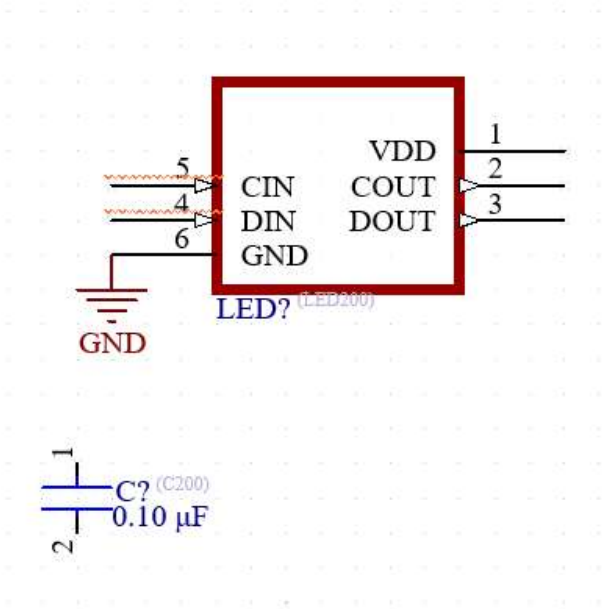

3.1. Placing Power Ports

Now that you have placed components, you will need to place symbols that represent GND.

1. Select the Power Port Icon near the top of Altium or by typing **po** or by clicking on the GND symbol near the top of the schematic editor.

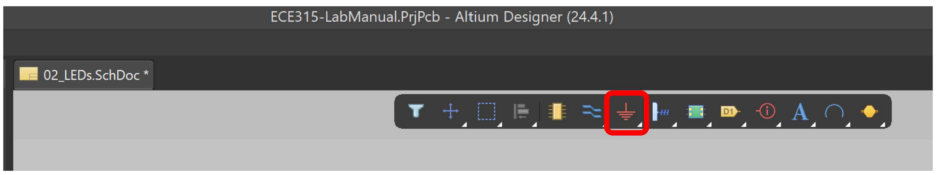

2. Place a GND symbol near the GND pin of the serial LED

3. Place a GND symbol near the bottom of the capacitor

4. Place a 5.0V 4 power port as shown below. Type **po**, then press the Tab key to set the properties of the symbol. In the Properties pane, change the name to 5.0V and change the Style to "Arrow". You can rotate the power ports using the **Spacebar**.

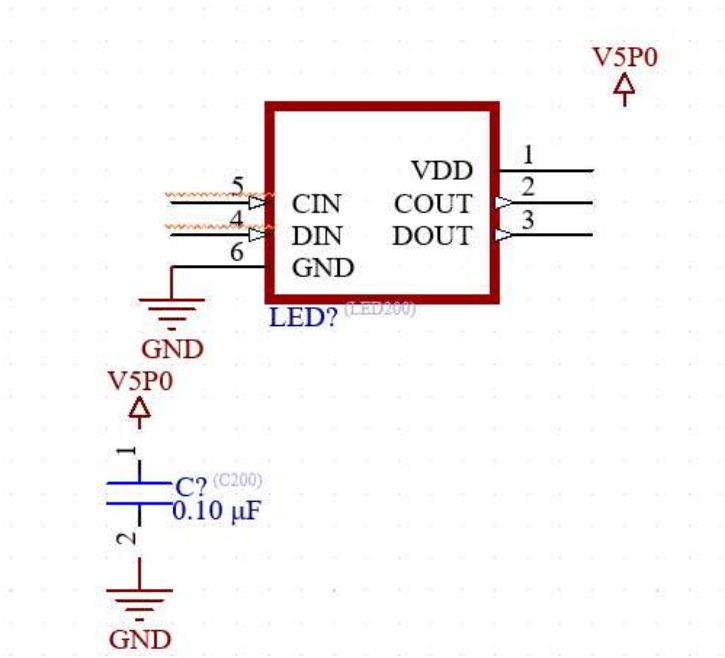

3.2. Adding Wires

Now that you have placed the parts, you will need to connect the components together. Connections in Altium are called a **wire**.

- You can place a wire by selecting the wiring tool from the command ribbon or by typing **pw** (place wire).
- When you want to stop adding a wire, press the ESC key.

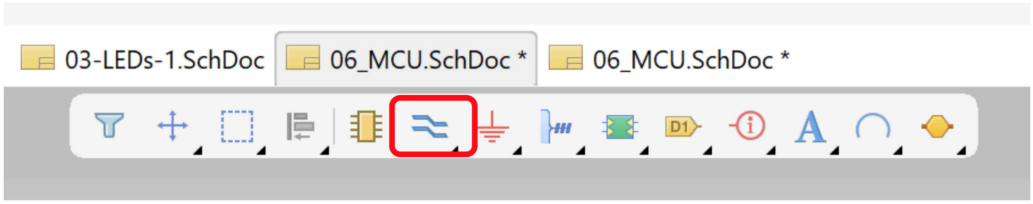

Use the wiring tool to connect the power ports and capacitors to the LED.

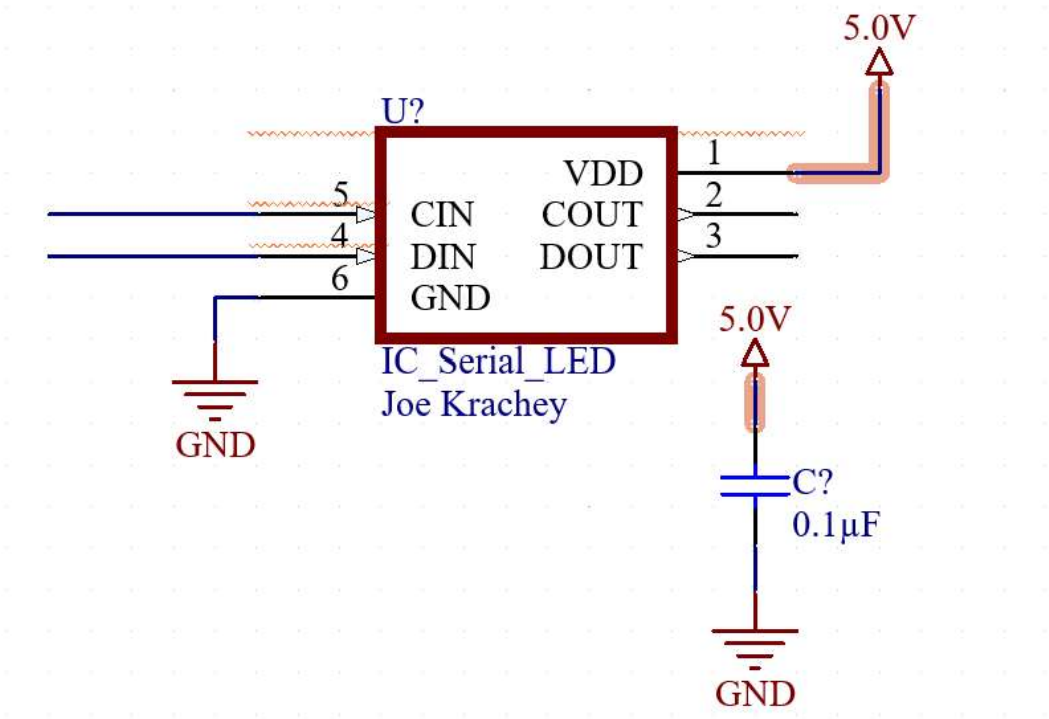

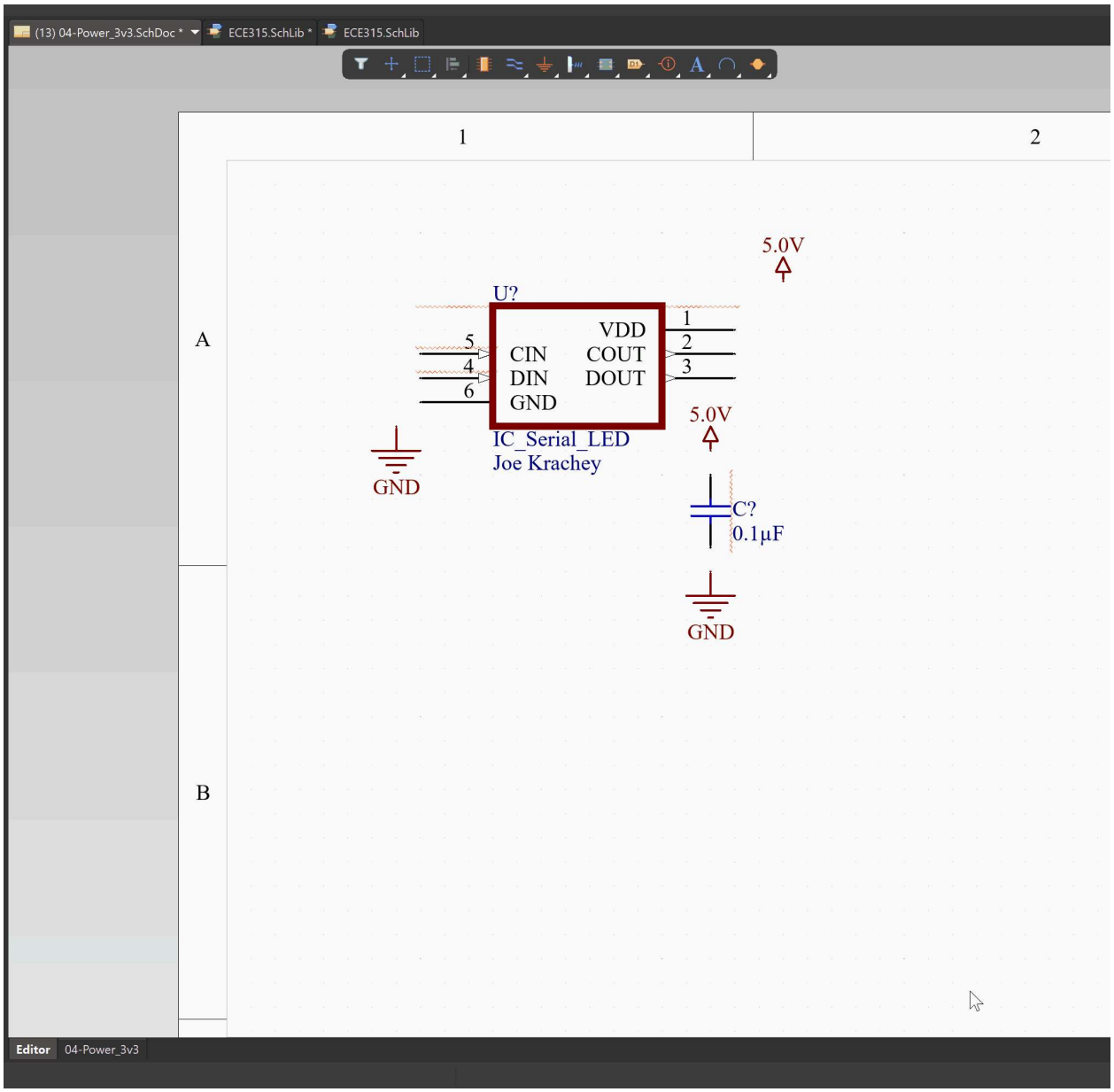

A good question to ask is what is the purpose of adding the capacitor to the schematic. This capacitor is being used as a bypass capacitor. Bypass capacitors help to filter out high frequency noise that can lead to the malfunction of an embedded system. **Every IC power supply pin** should have a bypass capacitor (in some cases more than 1) placed **within 5mm** of each pin to help improve system reliability.

3.3. Copying Parts

Coping parts in Altium is the same as most Windows based applications. You can select the parts/wires/ports that you want to copy and then use CTRL + C to copy the parts. You can then paste the parts using CTRL + P.

Create 12 copies of the LED/Capacitor pair as shown below. You will then need to add wires to connect the LEDs together. See the image below.

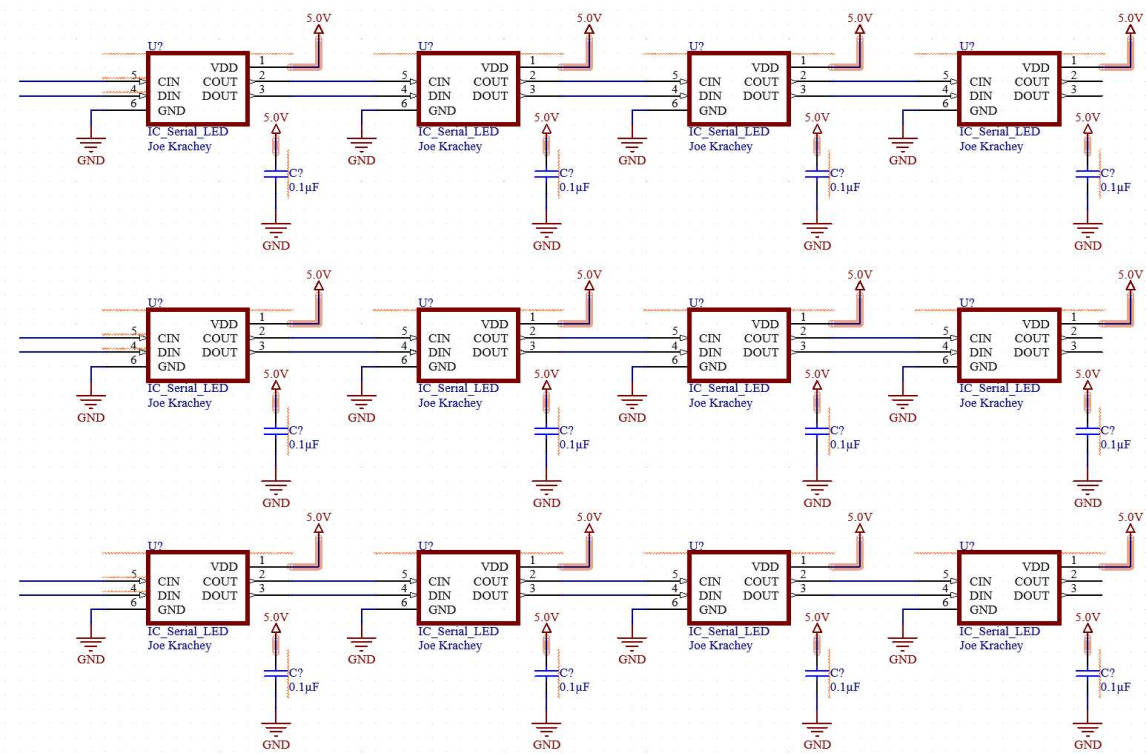

3.4. Adding Offsheet Connectors

It is an industry best practice to give all wires a name. When a net spans multiple schematics, we do this by adding an offsheet connector. An offsheet connector is a signal that can be referenced on any schematic page of the project.

1. Place an offsheet connector (**pc**) with a name of CLK0 on the CIN pin of the upper left most LED.
2. Place an offsheet connector (**pc**) with a name of DATA0 on the DIN pin of the upper left most LED.
3. Place an offsheet connector (**pc**) with a name of CLK4 on the COUT pin of the upper right most LED.
4. Place an offsheet connector (**pc**) with a name of DATA4 on the DOUT pin of the upper left most LED.

Make sure that CLK signals are connected to CLK pins and DATA signals are connected to DATA pins!

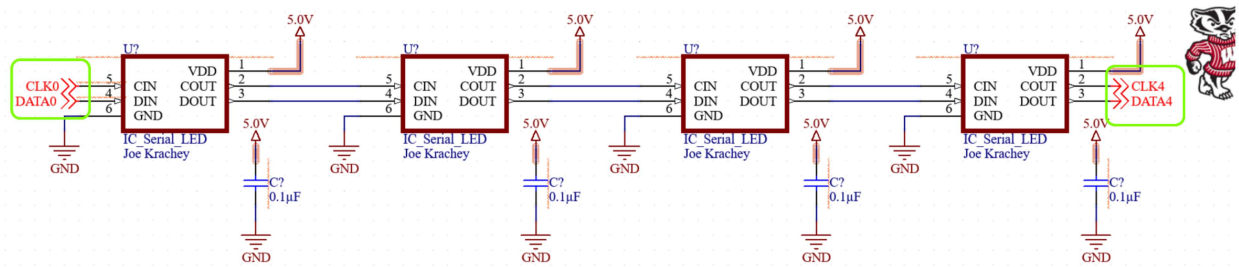

5. Repeat this process for the middle row, but change the connector names on the left to be CLK4 and DATA4, and the connectors on the right to be CLK8 and DATA8

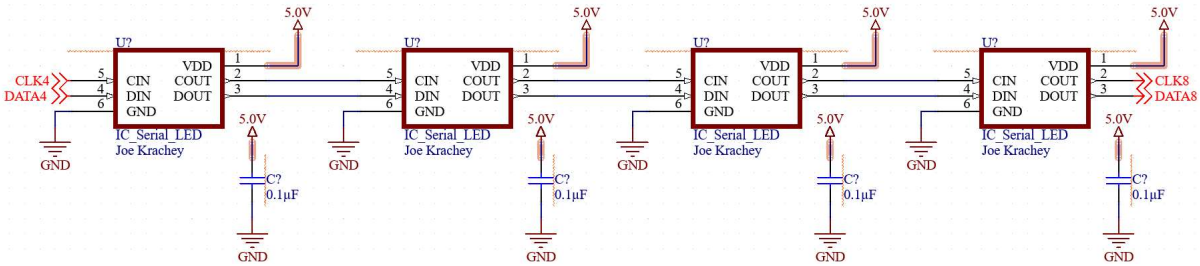

6. Repeat this process for the bottom row, but change the connector names on the left to be CLK8 and DATA8

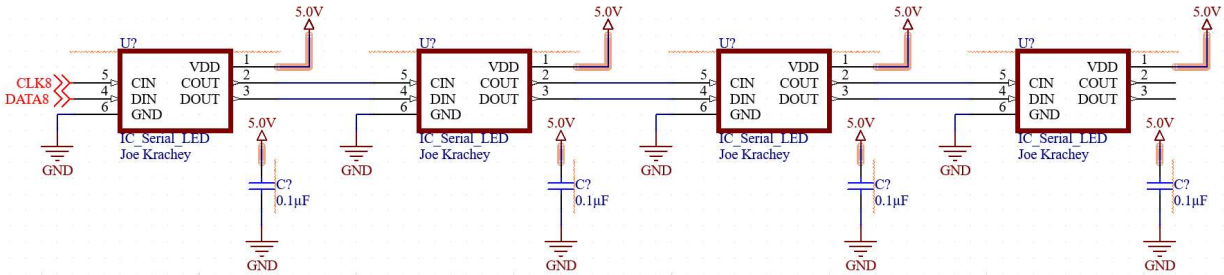

The LEDs in each row are connected together because Altium allows you to use connection-by-name to connect components in a schematic sheet. Any nets that have the same name are "connected" together.

3.5. Adding Net Names

For wires that are local to a single schematic page, you can place a net name on the wire.

1. Identify which wires connected to the MCU currently do NOT have net names. A wire that is connected to a power port is automatically given a net name that matches the power port.

2. You can add net names by typing **pn** (put netname).

3. The **Tab** key will allow you to change the netname. Netnames are any arbitrary string, but give them a meaningful name such as **CLK and DATA**.

4. You can place the netname by right clicking where you want the netname located. If the string for the netname ends in a number, Altium will automatically increment the number each time you place a net name.

5. When finished, press **Esc**. Your schematic should look similar to the following image.

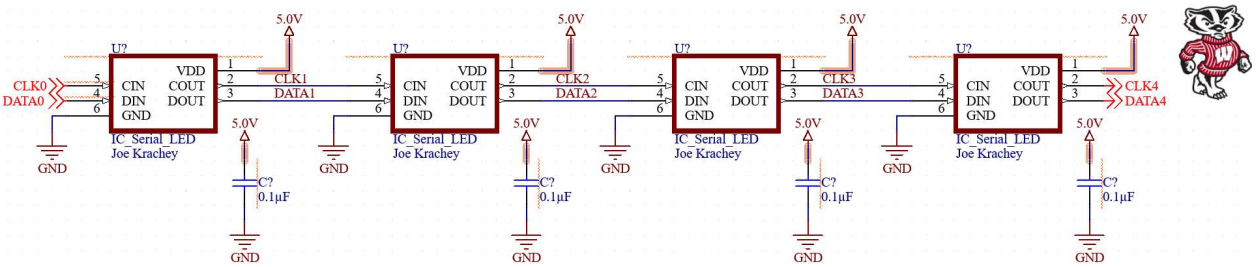

6. Provide netnames for the other rows of LEDs found in the schematic page.

7. Since the 12th LED is the last LED, we want to explicitly show that the output pins on the last LED are not connected to anything. We can place a No ERC directive on those pins (**pvn**). This will result in a red X on those pins.

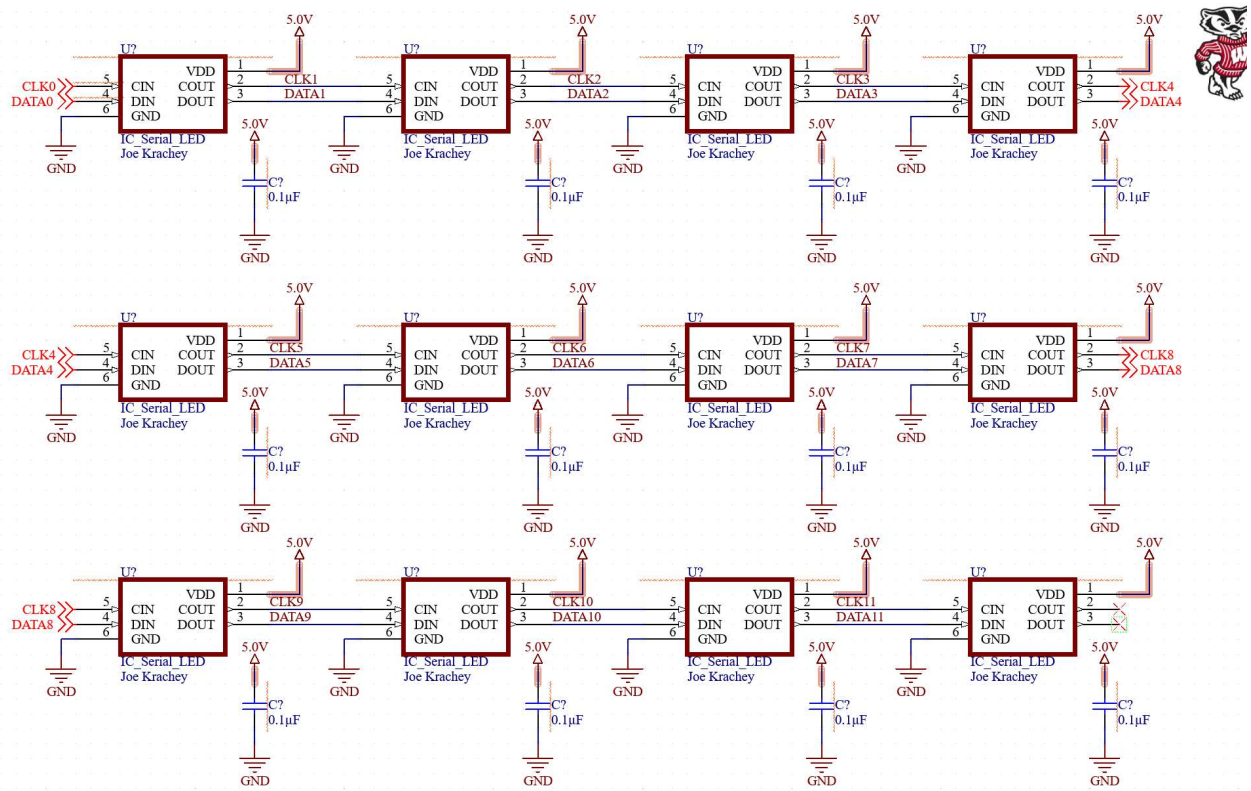

Wires connected to an offsheet connector DO NOT need a netname. The name of the offsheet connector will be assigned as a netname automatically

Submission Requirement

1. Complete 02_LED.SchDoc.
2. Use Snipping Tool to capture the completed page.
3. Save the file as 02_LED.png
4. Upload the file to Lab 2 Assignment in Canvas.

4. 04_Power

Complete the schematic page for 03_Power.SchDoc. You will use the Manufacturer Part Search for all the components on this page.

Part Number	Description
TLV1117LV33DCYR	Linear Voltage Regulator
CC1206KRX7R8BB104	0.1 uF Capacitor
5011	Test Point, 1 Position SMD

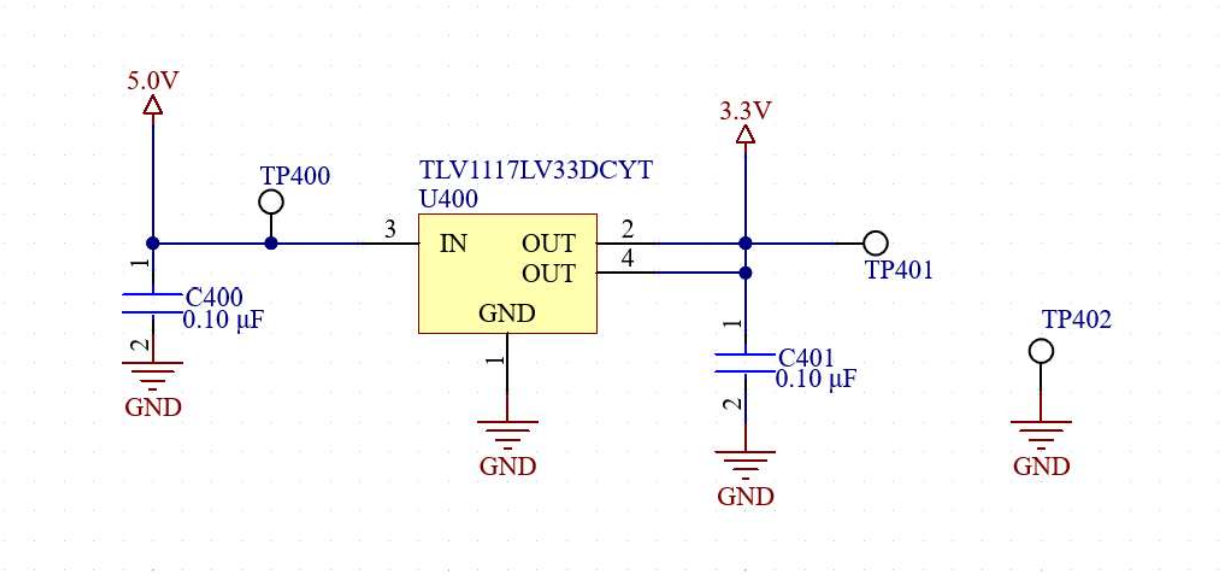

Submission Requirement

1. Complete 04_Power.SchDoc.
2. Use Snipping Tool to capture the completed page.
3. Save the file as 04_Power.png
4. Upload the file to Lab 2 Assignment in Canvas.

5. 05_Buzzer

Add a copy of the buzzer (CMT-8540S-SMT) from ECE315.SchLib to 05_Buzzer. Verify that you have correctly associated your Buzzer footprint with the part. This subcircuit will allow the MCU to generate tones and sounds using a PWM output to control the buzzer.

Use the parts/ports supplied on the page to complete this sub-circuit. When completed, the schematic should look similar to this image:

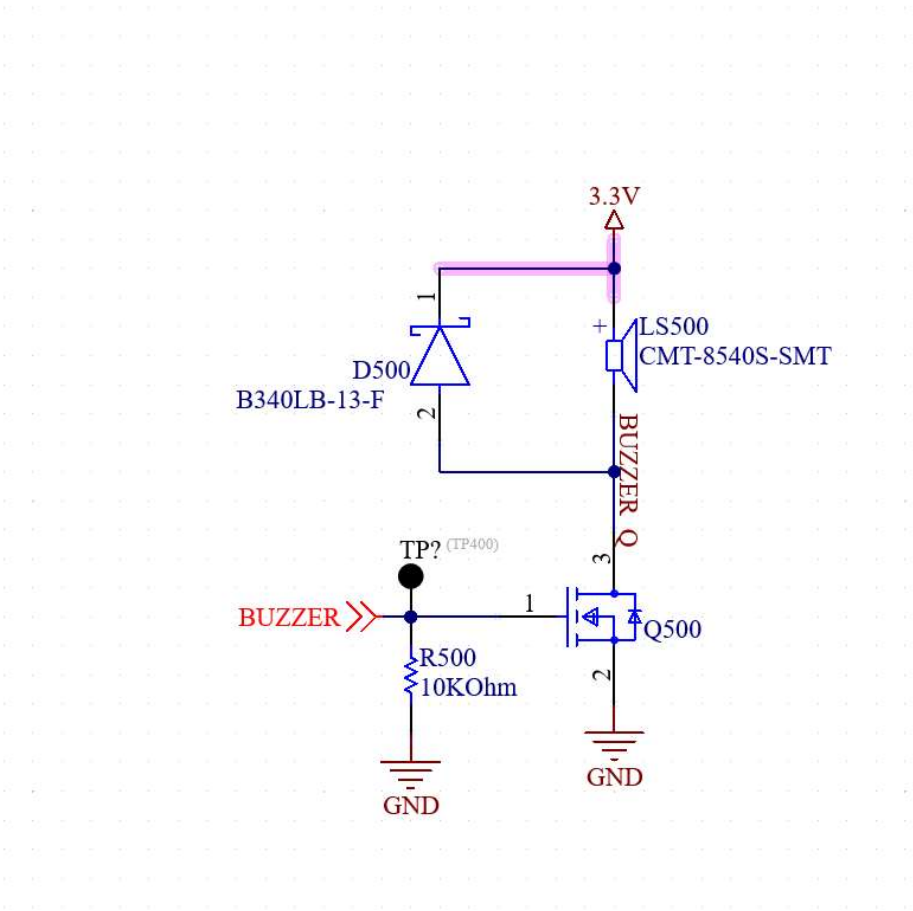

Submission Requirement

1. Complete 05_Buzzer.SchDoc.
2. Use Snipping Tool to capture the completed page.
3. Save the file as 04_Buzzer.png
4. Upload the file to Lab 2 Assignment in Canvas.

6. 06_Reset

Add a copy of the reset supervisor (MCP1316T-29LEOT) from ECE315.SchLib to 06_Reset.

Use the parts/ports supplied on the page to complete this sub-circuit. You can make copies of any component or power port that is required. When completed, the schematic should look similar to this image:

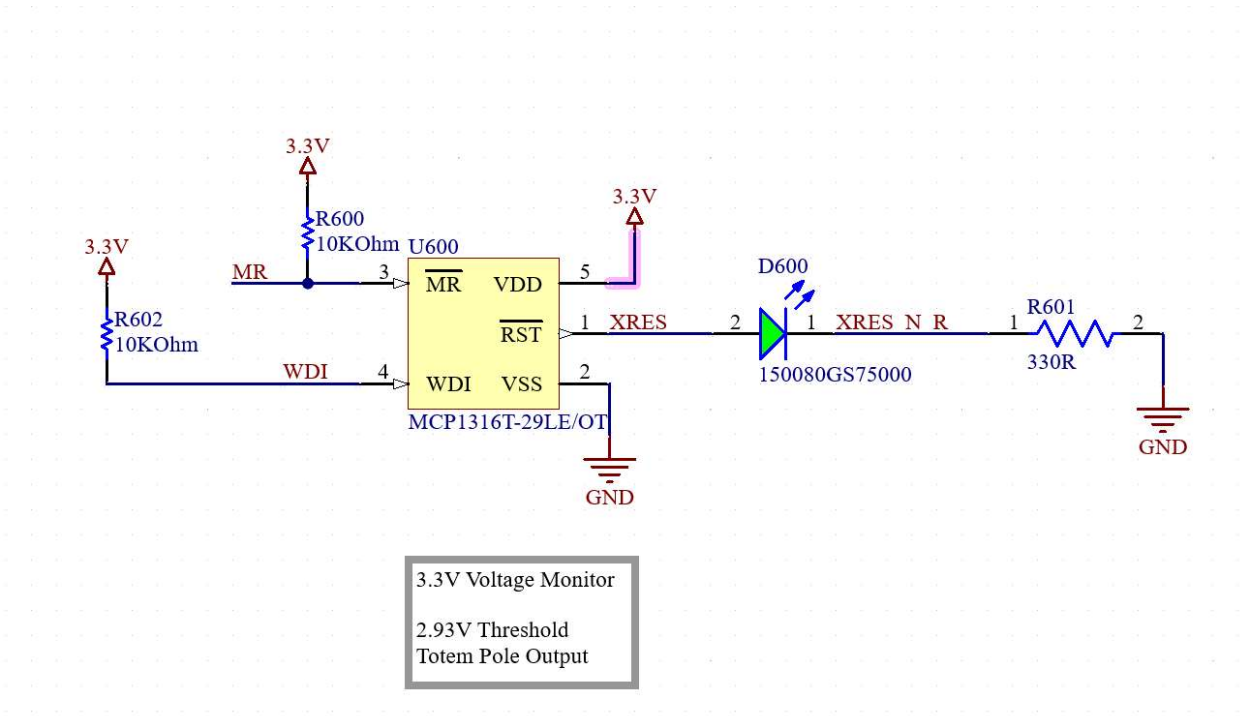

Submission Requirement

1. Complete 06_Reset.SchDoc.
2. Use Snipping Tool to capture the completed page.
3. Save the file as 06_Reset.png
4. Upload the file to Lab 2 Assignment in Canvas.

7. Annotating Your Schematics

Now that the schematics have been completed, you need to uniquely identify each of the components. These unique identifiers are called reference designators. As it currently stands, each resistor is identified as “R?”. We want each component to be identified with a unique string. This process is called annotation.

1. Select Tools→Annotation→Annotate Schematics or **taa**.
2. Select Reset All
3. Select Update Change List
4. Select Accept Changes
5. Select the Close Button

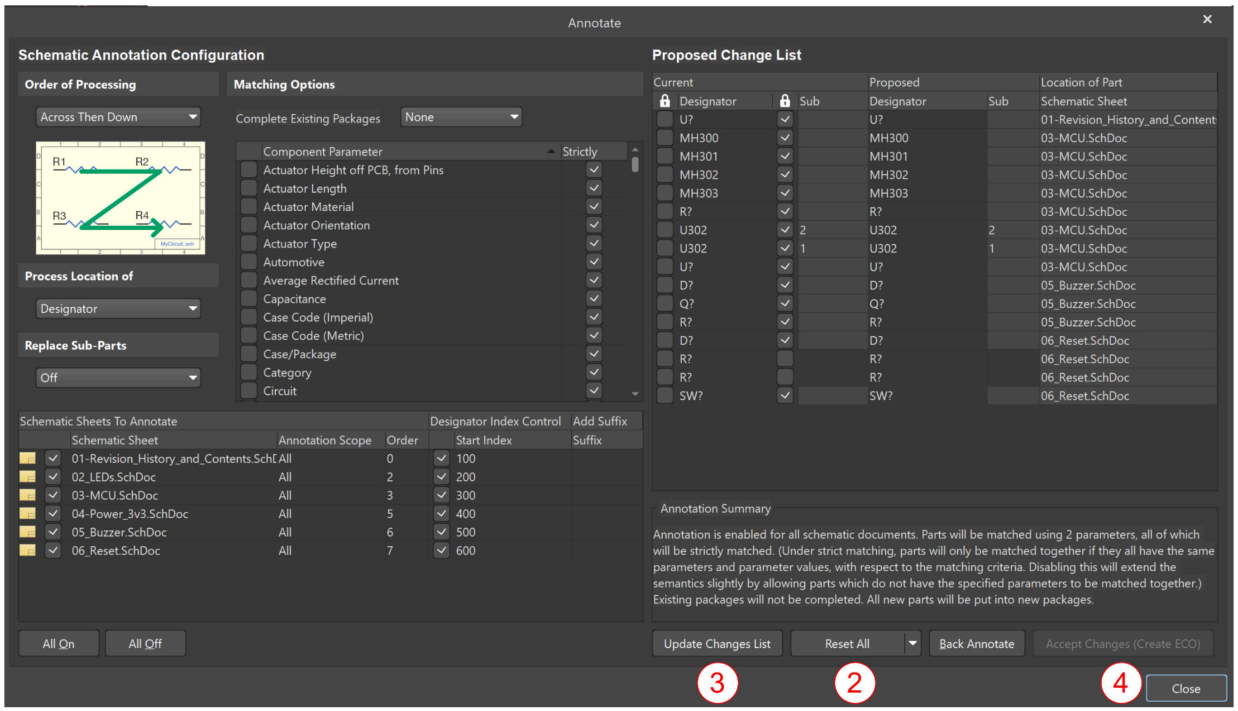

8. Validating the Design

All of the components have been placed and connected with wires, but it's a good idea to have Altium run some basic validation of your schematics. This helps to identify problems that you may have overlooked.

a) Execute the Validation Dialog by selecting Project→Validate PCB Project or (**cc**).

b) In the lower left hand corner, select Panels→Messages

The resulting dialog will display any errors that were detected. You can ignore any of the off-grid messages. If you hover over the warning, it will display the full text of the warning. In the example below, the footprints for two parts are missing. This is an error that you would need to fix before completing the lab.

If you have any other warnings/errors, examine your schematics and try to fix any problems reported. If you are unsure of what the error/warning means, ask your TA.

Submission Requirement

Validate your design.
Use Snipping Tool to capture the output of the Messages Window
Save the file as validate.png
Upload the file to Lab 2 Assignment in Canvas.

9. Defining Board Shape

A PCB can have almost any 2-Dimensional shape. The shape of the PCB is oftentimes determined by the enclosure or casing that will hold the printed circuit board. The design for ECE315 will not have an enclosure, but you will design a PCB that is **95mm x 95mm**. This size was chosen to minimize the cost of fabricating the PCB.

Use the following document to define the PCB that is **95mm x 95mm**. The PCB Doc has already been created for you, so skip to section 3.

Submission Requirement
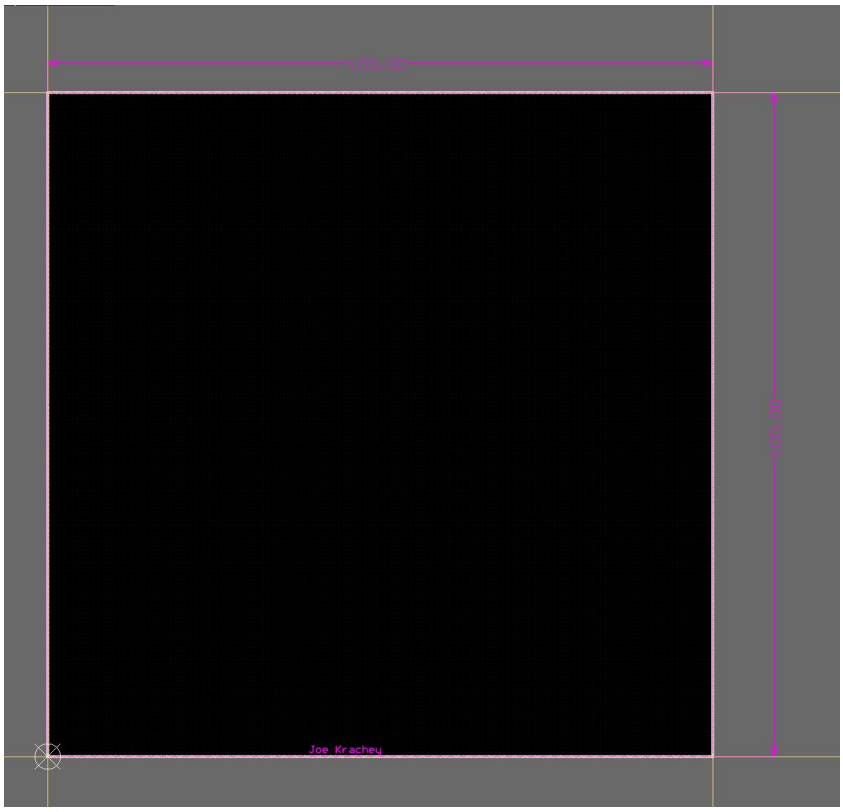
1. Complete your **95mm x 95mm** board shape.
2. Add X and Y linear dimensions to your board.
3. Add a string with your name on it to Mechanical Layer 1.
4. Use Snipping Tool to create an image of symbol along with the preview of the footprint
5. Save the file as BoardShape.png
6. Upload the file to Lab 2 Assignment in Canvas.