Kidney-On-A-Chip

Aparna Bhandaru, Briseyda Duran Orozco,
Aaheli Das, Bella Jimenez

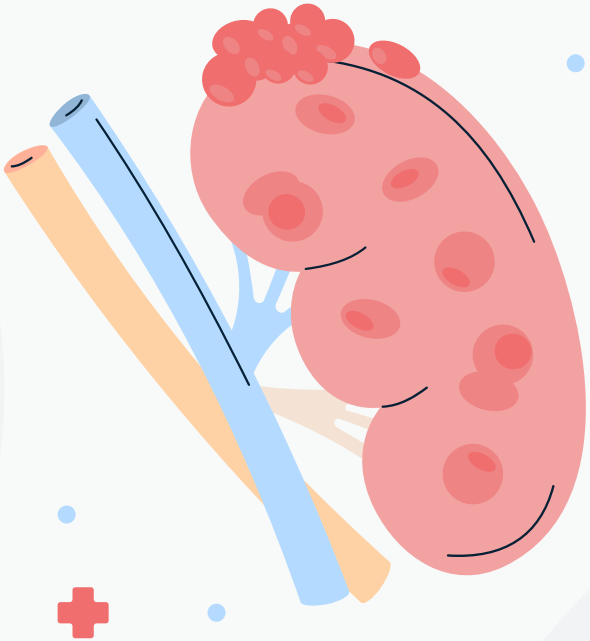

Table of contents

1 Introduction

2 Background

3 Proposed Improvement

4 Methodology
Analytical and COMSOL

5 Results

6 Discussion

Introduction

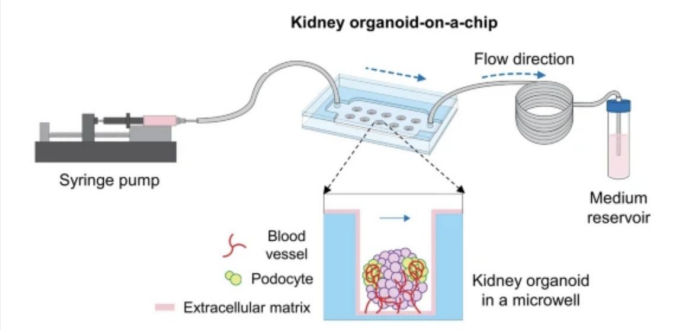

- Paper - ***"Effect of biochemical and biomechanical factors on vascularization of kidney organoid-on-a-chip"***
- *Objective*
  - Develop a kidney organoid-on-a-chip system to provide fluidic flow mimicking shear stress in-vivo to study flow-induced vascularization
- *Problem Addressed*
  - Under static conditions, organoid cultures lack physiological fluid forces, leading to poor vascular network formation and limited maturation.
- *Device Design*
  - Microfluidic channel with 10 evenly spaced cylindrical microwells
  - Wells hold a kidney organoid in the center, providing even fluid flow from all sides
  - Done while maintaining ideal extracellular matrix conditions for blood vessel formation
- The paper simulated various *heights and diameter* of the microwells to determine maximum shear stress
  - Found that the Wall Shear Stress decreases as height increased
  - Max Shear Stress was at 1.5mm well diameter (tested 0.1 to 2mm)

Background

Kidney Function:

- ➔ Blood flows in through the renal artery, branching into afferent arterioles into each nephrons (single filtering unit), & glomeruli
- ➔ The glomerulus filters out waste and fluid, then blood leaves via efferent arterioles into peritubular capillaries.
  - ◆ These capillaries reabsorb valuable nutrients and water before the clean blood drains out through the renal vein.
  - ◆ Reabsorption and filtration are driven via biomechanical (shear) and biochemical factors.
  - ◆ In-vivo, cells can’t survive further than 200 microns from vessels

Clinical Significance:

- ➔ Chronic kidney disease (CKD) affects more than 1 in 7 U.S. adults, about 35.5 million people in the U.S, and more severe in developing countries
- ➔ There's a lack of anatomically and functionally accurate kidney models, requiring the need for microfluidics for vascularization

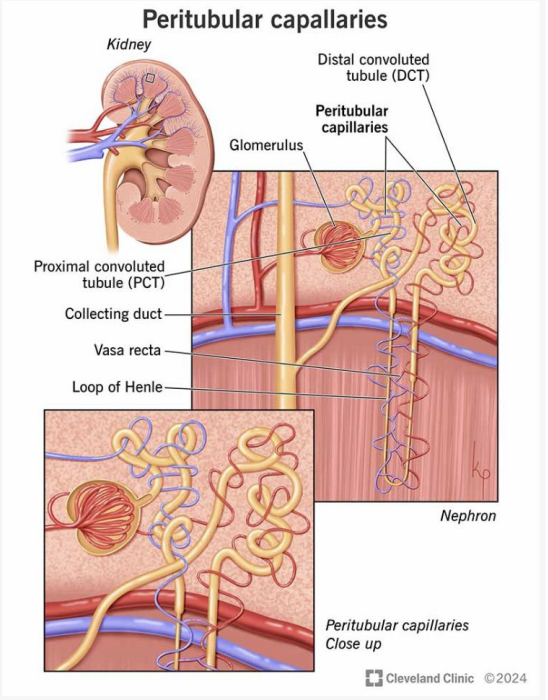

Figure 2: Close up of kidney, nephrons, glomeruli and capillaries

Proposed Improvement

- Literature Review: ***Characteristics of numbering-up and flow distribution of multi-channel microreactor with 2-D constructal inlet distributors***
  - Paper findings:
    - 16, 8, 4, 2 channel microreactors were investigated
    - Observed that the pile-up effects of the asymmetrical flow resistance after a bifurcation point is an important factor resulting in the non-uniformity of the flow distribution in microchannels.
- Design Improvement: Reduce the number of wells to increase uniformity of flow and shear stress distribution
  - Correlating the pile-up effects due to bifurcation to the pile-up effect that will happen due to the addition of the microwells in the channel.
  - Fewer wells = More uniformity of flow
- Calculate the Mean, Standard Deviation & Coefficient of Variation of shear stress on kidney organoids for N = 2, 3, 4, 5

Methodology - Assumptions, Boundary Conditions, and Diagram

1. Steady-state → $\frac{\partial u}{\partial t} = 0$
2. Fully developed → $\frac{\partial u}{\partial z} = 0, \quad \frac{\partial^2 u}{\partial z^2} = 0$
3. Incompressible → $\nabla \cdot \vec{v} = 0$
4. Constant viscosity → $\mu = \text{constant}$
5. Negligible gravity → $\rho g = 0$
6. Unidirectional flow → $u = 0, \quad v = 0$
7. No pressure gradient in x, y → $\frac{\partial p}{\partial x} = 0, \quad \frac{\partial p}{\partial y} = 0$
8. No-slip at walls → $u\left(\pm\frac{w}{2}\right) = 0$

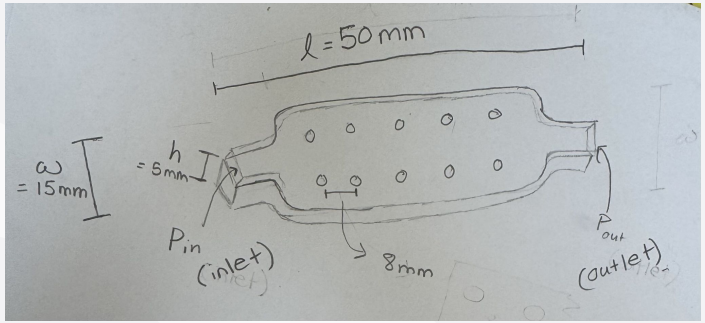

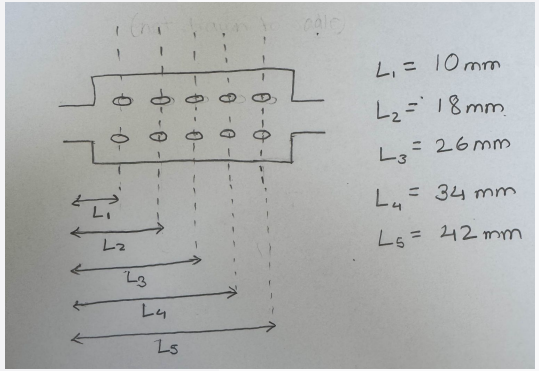

Shows where the shear stress will be calculated where each pair of the wells are located.

Methodology - Governing Equations

$$\frac{\partial p}{\partial z} = \frac{\Delta P}{L}$$

$$\tau_y = \mu \frac{\partial u}{\partial y}$$

$$\rho \frac{D\vec{v}}{Dt} = \rho \vec{g} - \nabla p + \mu \nabla^2 \vec{v}$$

$$\rho \frac{D\vec{v}}{Dt} = \rho \left(\frac{\partial u}{\partial t} + u \frac{\partial u}{\partial x} + v \frac{\partial u}{\partial y} + w \frac{\partial u}{\partial z} \right)$$

$$\rho \vec{g} - \nabla p + \mu \nabla^2 \vec{v} = \rho g_x - \frac{\partial p}{\partial x} + \mu \left(\frac{\partial^2 u}{\partial x^2} + \frac{\partial^2 u}{\partial y^2} + \frac{\partial^2 u}{\partial z^2} \right)$$

Analytical Solution

$$\rho\frac{D\vec{v}}{Dt} = \rho\vec{g} - \nabla p + \mu\nabla^2\vec{v}$$ Given

$$\rho\frac{D\vec{v}}{Dt} = \rho\left(\frac{\partial u}{\partial t} + u\frac{\partial u}{\partial x} + v\frac{\partial u}{\partial y} + w\frac{\partial u}{\partial z}\right)$$ Given

$$\rho\vec{g} - \nabla p + \mu\nabla^2\vec{v} = \rho g_x - \frac{\partial p}{\partial x} + \mu\left(\frac{\partial^2 u}{\partial x^2} + \frac{\partial^2 u}{\partial y^2} + \frac{\partial^2 u}{\partial z^2}\right)$$ Given

$$\rho\left(\frac{\partial u}{\partial t} + u\frac{\partial u}{\partial x} + v\frac{\partial u}{\partial y} + w\frac{\partial u}{\partial z}\right) = -\frac{\partial p}{\partial z} + \mu\left(\frac{\partial^2 u}{\partial x^2} + \frac{\partial^2 u}{\partial y^2} + \frac{\partial^2 u}{\partial z^2}\right)$$

$$\frac{\partial p}{\partial z} = \frac{\Delta P}{L}$$ Given

$$0 = -\frac{\Delta P}{L} + \mu\frac{\partial^2 u}{\partial y^2}$$

$$\mu\frac{\partial^2 u}{\partial y^2} = \frac{\Delta P}{L}$$

$$\frac{\partial u}{\partial y} = \frac{\Delta P}{\mu L}y + C_1$$

$$u(y) = \frac{\Delta P}{2\mu L}y^2 + C_1 y + C_2$$

$$u\left(\frac{w}{2}\right) = 0 = \frac{\Delta P}{2\mu L}\cdot\frac{w^2}{4} + C_1\cdot\frac{w}{2} + C_2$$

$$u\left(-\frac{w}{2}\right) = 0 = \frac{\Delta P}{2\mu L}\cdot\frac{w^2}{4} - C_1\cdot\frac{w}{2} + C_2$$

$$C_1 = 0$$

$$C_2 = -\frac{\Delta P}{2\mu L}\cdot\frac{w^2}{4}$$

$$u(y) = \frac{\Delta P}{2\mu L}\left(y^2 - \frac{w^2}{4}\right)$$

$$\frac{\partial u}{\partial y} = \frac{\Delta P}{\mu L}y$$

$$\tau_y = \mu\frac{\partial u}{\partial y}$$ Given

$$\tau_y = \frac{\Delta P}{L}y$$

$$\tau_{wall} = \tau_y\big|_{y=\pm\frac{w}{2}} = \frac{\Delta P}{L}\cdot\frac{w}{2}$$

$$\boxed{\tau_{wall} = \frac{w}{2}\cdot\frac{\Delta P}{L}}$$

Calculating Theoretical Shear Stress

These Lengths correspond to each pair of wells on the chamber

$$\mathbf{L_1}: \quad \tau_{\text{wall1}} = \frac{0.015}{2} \cdot \frac{\Delta P}{0.01} = 0.075\Delta P$$

$$\mathbf{L_2}: \quad \tau_{\text{wall2}} = \frac{0.015}{2} \cdot \frac{\Delta P}{0.018} = 0.04167\Delta P$$

$$\mathbf{L_3}: \quad \tau_{\text{wall3}} = \frac{0.015}{2} \cdot \frac{\Delta P}{0.026} \approx 0.02885\Delta P$$

$$\mathbf{L_4}: \quad \tau_{\text{wall4}} = \frac{0.015}{2} \cdot \frac{\Delta P}{0.034} \approx 0.02206\Delta P$$

$$\mathbf{L_5}: \quad \tau_{\text{wall5}} = \frac{0.015}{2} \cdot \frac{\Delta P}{0.042} \approx 0.01786\Delta P$$

All in all, the theoretical shear stresses at each pair of wells show that it starts to decrease as you get closer to the outlet.

→Difference in pressure will be a constant positive number so the values for shear stress will still go lower.

→ Ideally this would be the case because the wells would fill up with some of the fluid lowering the flow rate.

→ Also it makes sense for the shear stress to go lower since the flow would naturally decrease with time due to the viscosity of the fluid.

Device Design

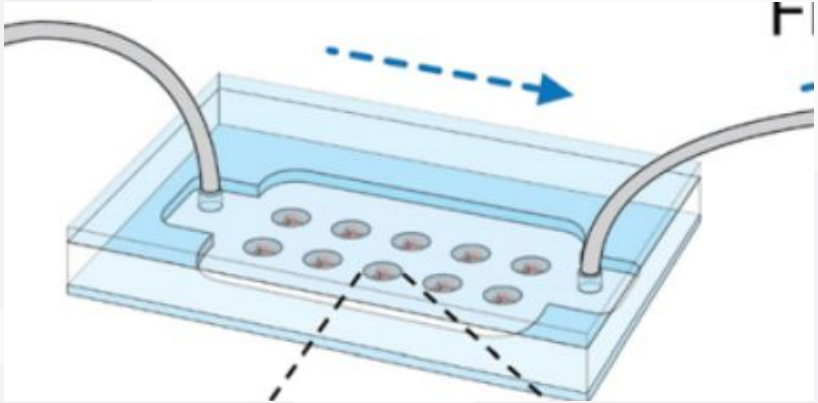

Kidney-organoid-on-a-chip, showing flow direction (syringe pump connected to the right, medium reservoir on the left)

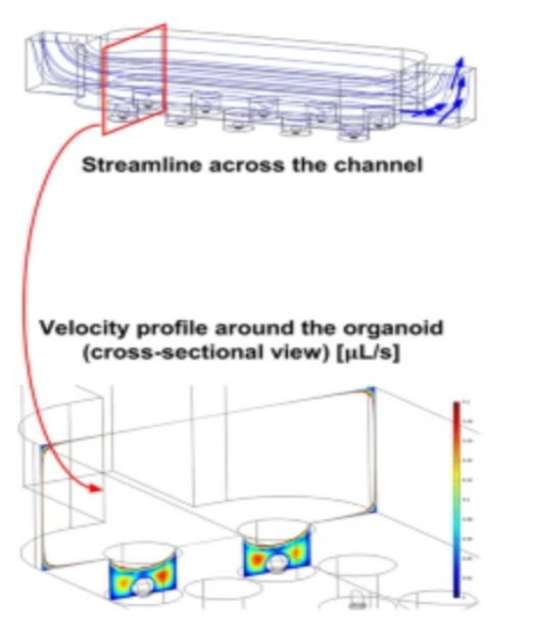

Simulated streamlines across the microchannel and cross-sectional velocity profiles around the kidney organoid (bottom)

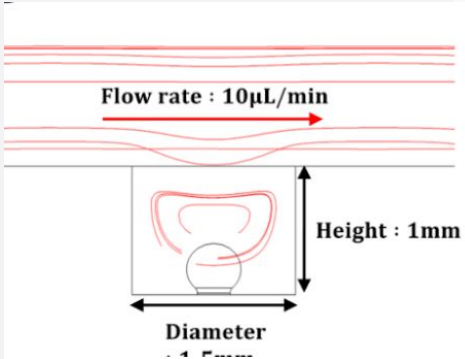

Simulated cross-sectional streamline across the microchannel

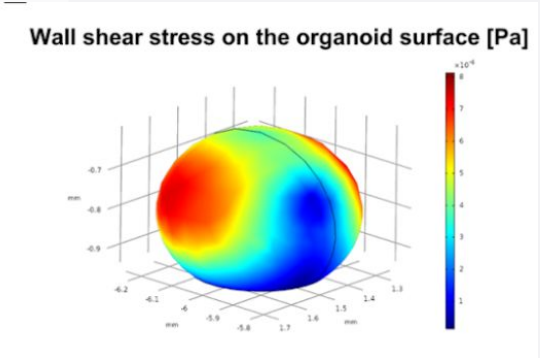

Wall shear stress acting on kidney organoid surface

Honorable Device Designs

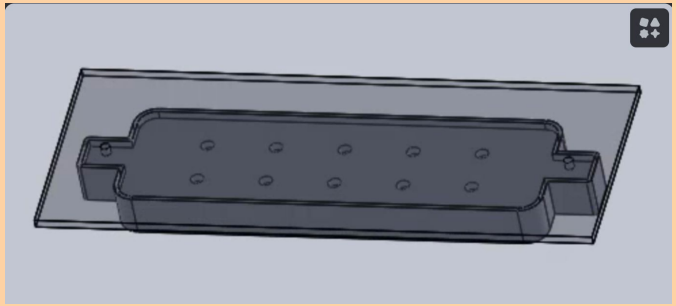

1. Designed on Solidworks

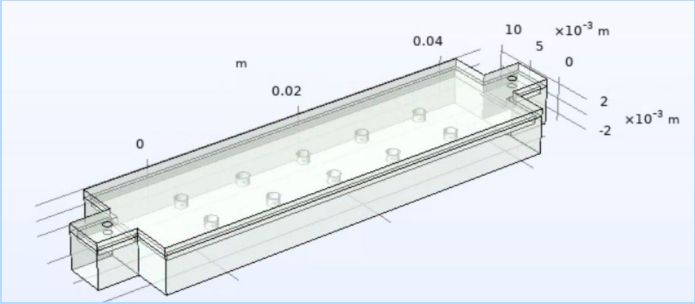

3. Design on COMSOL

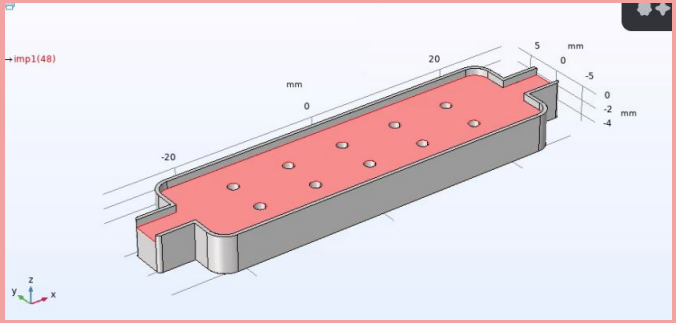

2. Redesigned

Device Design on COMSOL (Muffin Pan)

Wells
Radius: 0.75 [mm]
Height: 1 [mm]

Kidney Organoids
A semi axis: 0.00025 [m]
B & C semi axis: 0.0002 [m]

Wells and Kidneys

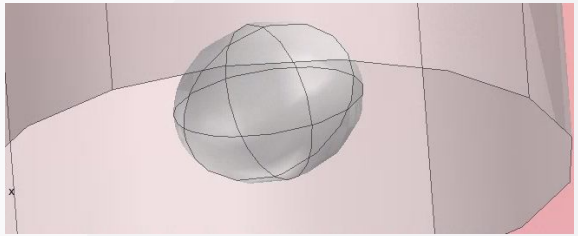

Zoomed in: Kidney Organoid

"Lid"
W: 15[mm]
L: 50 [mm]
H: 5 [mm]

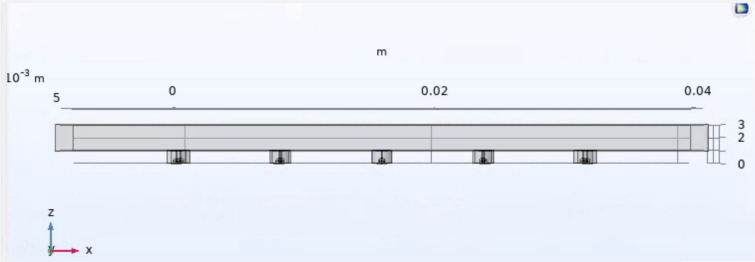

Side view

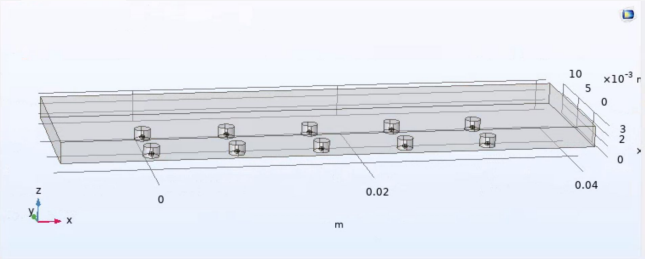

Tilted view

Parameters

Inlet: Green, Outlet: Pink

Flow rate
Average pressure
Flow rate:
V_0 1.667*10^-10 m^3/s

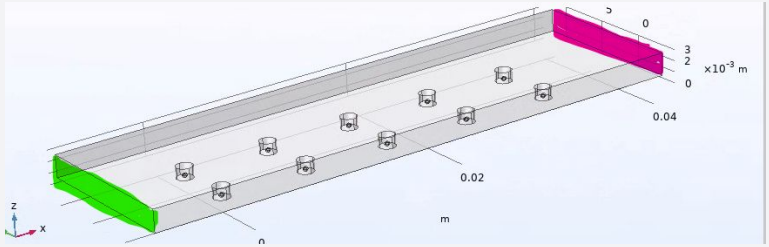

Viscosity & Density

vis	1*10^-3[Pa*s]	0.001 Pa·s
rho	1.0[g/cm^3]	1000 kg/m^3

Parametric Sweep

Parameter name	Parameter value list
well_num	2,3,4,5

**Well number values are half of the actual total number of wells-due to array created in geometry

- 2 = 4 wells
- 3 = 6 wells
- 4 = 8 wells
- 5 = 10 wells

Mesh Statistics

MESH: Fine

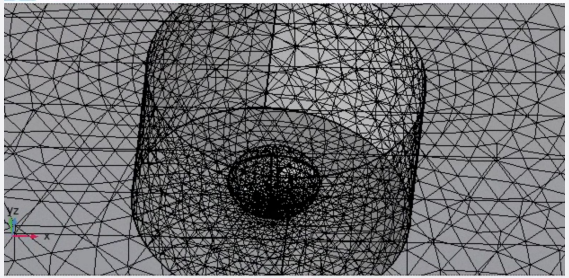

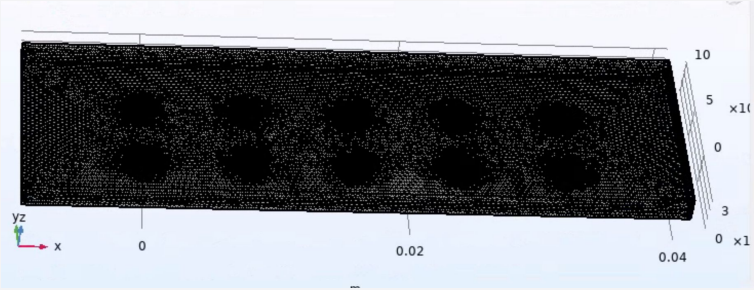

Element Quality Histogram

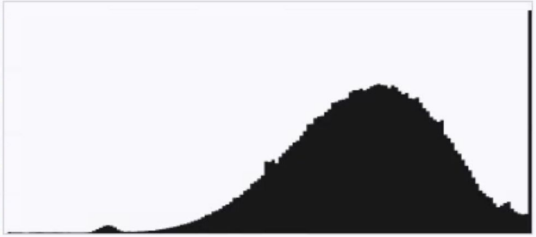

Statistics

Complete mesh

Mesh vertices:	205658
Element type:	All elements
Tetrahedra:	768556
Pyramids:	2424
Prisms:	121332
Triangles:	74610
Quads:	376
Edge elements:	2860
Vertex elements:	148

Domain element statistics

Number of elements:	892312
Minimum element quality:	0.002478
Average element quality:	0.6885
Element volume ratio:	8.805E-8
Mesh volume:	1.518E-6 m³

COMSOL Results: Velocity & S.S. Slices

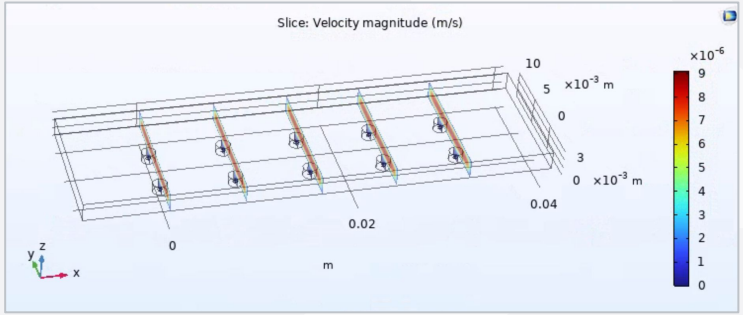

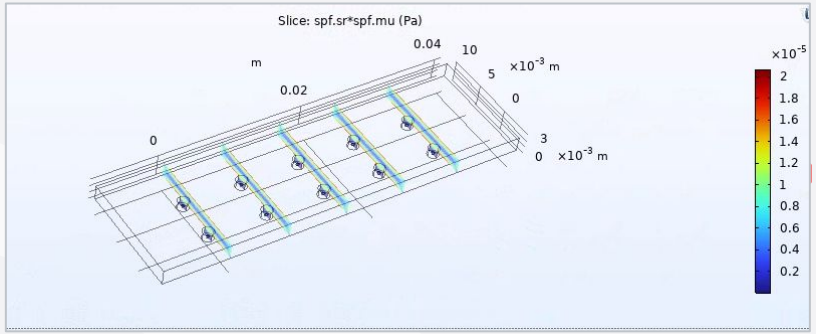

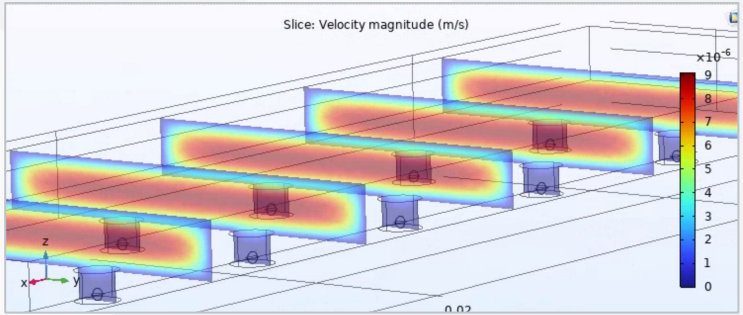

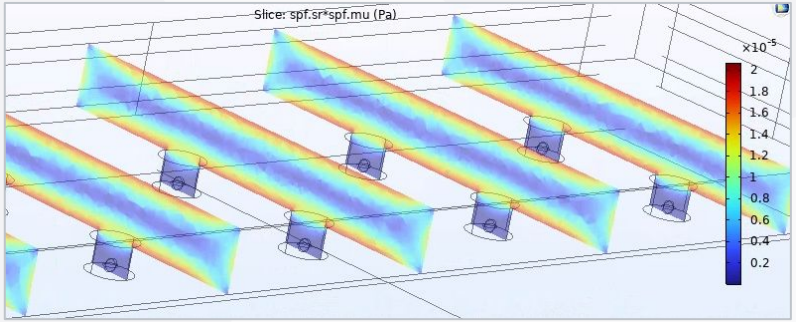

COMSOL Results: Surface Plots

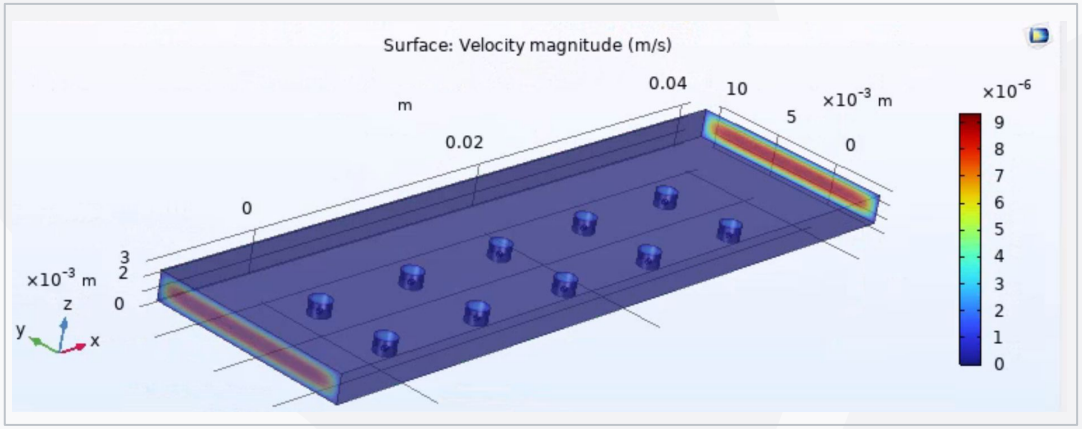

Zoomed in at the well

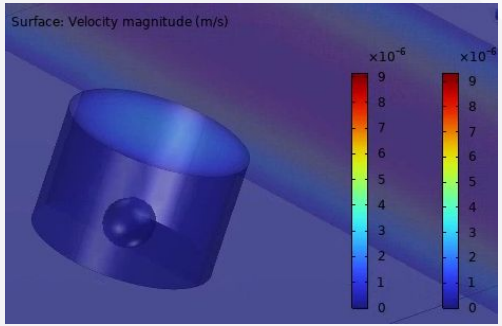

Zoomed in at the well

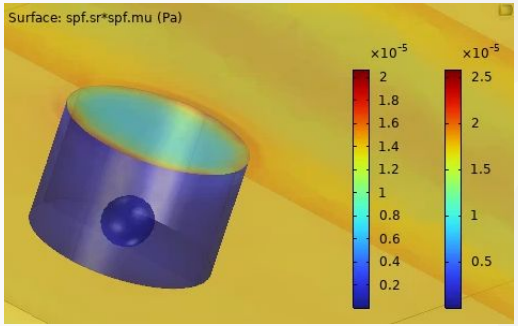

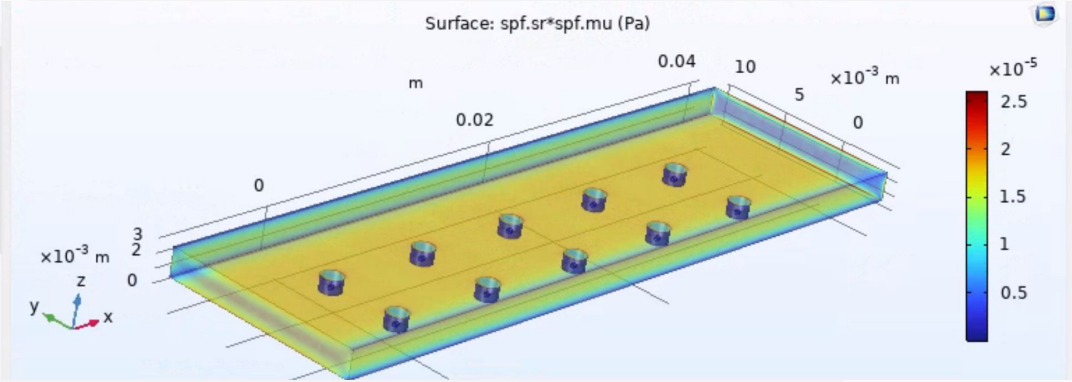

Well differences:

Selected: 10 wells (5) , 8 wells (4) , 6 wells (3), 4 wells (2)

- Disclaimer: Have not figured out how to produce a plot of the wall shear stress on the organoid surface yet
- Used Probes to analyze Average Shear Stress at different Domains and Boundaries
  - Probe Boundary Well bottoms
  - Probe Domain Well bottom & well walls
  - Probe Domain the “Lid”

Look: Right to Left

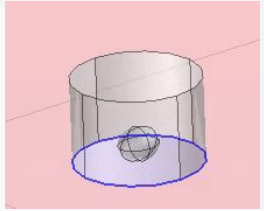

Well bottom

well_num	spf.sr*spf.mu (N)
2.0000	3.9043E-12
3.0000	5.8642E-12
4.0000	7.8159E-12
5.0000	9.7725E-12

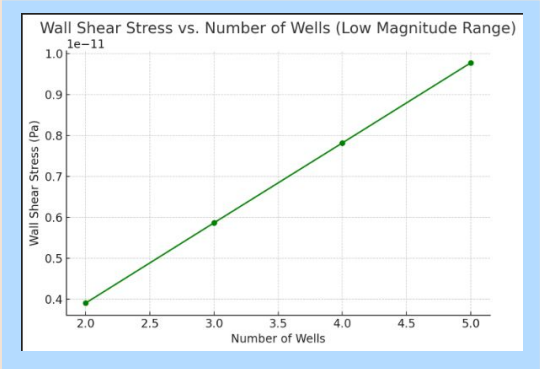

Fewer wells to receive redirected flow → less shear at well floors

Well Differences

Look: Right to left

Lid

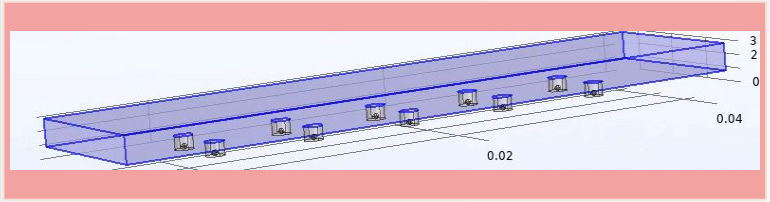

well_num	spf.sr*spf.mu (Pa), Domain Probe 2
2.0000	8.8127E-6
3.0000	8.8062E-6
4.0000	8.7963E-6
5.0000	8.7947E-6

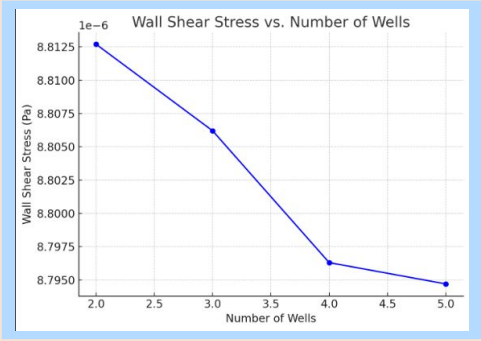

Less interruption by wells → flow remains more laminar along the lid → higher shear

Well bottom & well walls

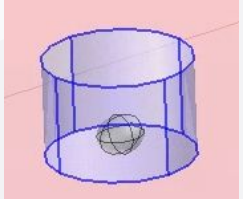

well_num	spf.sr*spf.mu (N)
2.0000	2.7430E-11
3.0000	4.1071E-11
4.0000	5.4694E-11
5.0000	6.8394E-11

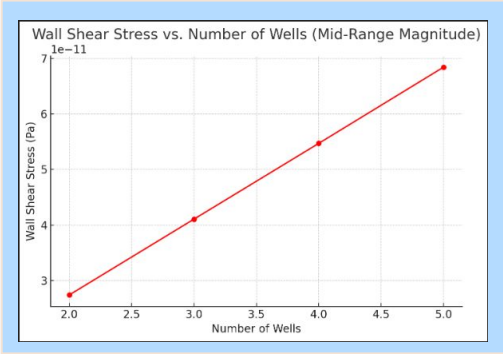

Less total surface exposed to incoming flow → reduced total shear

Discussion

Accomplished:

- ➔ High shear stress (red regions) is observed near the inlet/outlet and around the wells
- ➔ Low shear stress (blue regions) appears in the bulk of the flow, away from solid boundaries
- ➔ The color bars show values in the range of ~0.2×10^{-5} to ~2.5×10^{-5} Pa — relatively low, typical in microfluidic flows.

Challenges:

- ➔ Numerous design iterations were required due to the lack of detailed procedural descriptions in the reference model we were replicating.
  - ◆ Supplementary research from other papers was necessary to fill in methodological gaps.
- ➔ Issues: Having the flow go through the wrong domains
  - ◆ Fixed geometry to be a simple model
  - ◆ Streamline plot was only showing the flow going straight across, not dipping into the wells (still need to be explore)

Next Steps:

- ➔ Verify geometry and boundaries/ Possibly change it since organoids may not be experiencing enough shear stress
- ➔ Test with more probe boundaries including every boundary
- ➔ Figure out how to produce wall shear stress on the organoid surface
- ➔ Calculate standard deviation and coefficient of variation
- ➔ Compare those results when there are different amount of wells

Early simulations

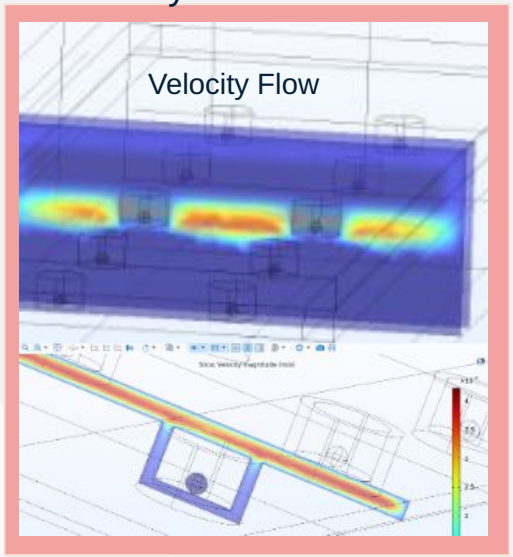

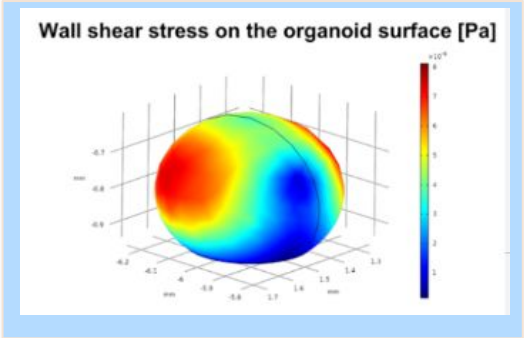

References

Lee, H. N., Choi, Y. Y., Kim, J. W., Lee, Y. S., Choi, J. W., Kang, T., Kim, Y. K., & Chung, B. G. (2021, November 8). Effect of biochemical and biomechanical factors on vascularization of kidney organoid-on-a-chip - nano convergence. SpringerLink. https://link.springer.com/article/10.1186/s40580-021-00285-4

López-Otero, R., Santos, T., & Ferreira, A. (2024). *Flow distribution and shear-stress uniformity in microchannel arrays: The impact of branch count*. *Chemical Engineering Science, 290*, 119628. https://doi.org/10.1016/j.ces.2024.119628

Hiratsuka, K., Miyoshi, T., Kroll, K. T., Gupta, N. R., Valerus, M. T., Ferrante, T., Yamashita, M., Lewis, J. A., & Morizane, R. (2022, September 21). Organoid-on-a-chip model of human ARPKD reveals mechanosensing pathomechanisms for drug discovery. Science Advances. https://www.science.org/doi/pdf/10.1126/sciadv.abg7700

Guo, W., Wang, Q., Wei, X., Jin, N., Chen, Y., Chen, X., & Zhao, Y. (2024, July 16). Characteristics of numbering-up and flow distribution of multi-channel microreactor with 2-D constructal inlet distributors. Chemical Engineering Science. https://www.sciencedirect.com/science/article/pii/S0009250924007954

Thanks!

Any tips or suggestions would be appreciated!

CREDITS: This presentation template was created by **Slidesgo**, and includes icons by **Flaticon** and infographics & images by **Freepik**