SJSU SAN JOSÉ STATE UNIVERSITY

Mechanical Heart Valves Performances

Final Project Proposal
Fall 2024

Team Members:
Samantha Yeo, Aaheli Das, Sarai Gallardo

Technical Advisors:
Dr. Bellofiore

Date: November 22, 2024

Project Summary

Overview:

For this research project, our team is developing a design of a mechanical heart valve in SolidWorks to see if the performance is better than the current designs of heart valves and then we will use Comsol to test the various valves and flow rates of them.

Objectives:

- Design a mechanical heart valve, specifically a uni-leaflet valve and to see if it performs better or worse than the bi-leaflet and tri-leaflet valves out in the market
- Test the valves on Comsol at different angles and flow rates to gain numerical data and compare the different valves

Project Background

History

The development of heart valves first started around the 1950s with the ball caged valve. Since then, there has been significant advancements with the bi-leaflet heart valves being the most used today, but there has not been much improvements toward it. Current research focuses on improving on blood flow dynamics, reducing thrombogenicity and enhancing hemocompatibility, therefore our research is finding ways on how to improve on them.

Current Knowledge

Current Methods

- computational methods
  - simulations that model blood flow patterns through the valve
- in vitro testing that model the cardiovascular heart system

Gap in Knowledge

- how to prevent thrombosis without the need for anticoagulation
- improve the hemodynamics
- optimize the design and improve the durability

Significance

Target Audience:

- Individuals that have heart valve disease and will need a valve replacement surgery

Impact:

- Improved Quality of Life
  - Enhanced blood flow dynamics and reduced symptoms enable better daily functioning and increased energy levels.
- Longer Lifespan with Fewer Complications
  - Durable design reduces the need for repeat surgeries and minimizes risks like thrombosis or infections.
- Less Medication Dependence
- Advanced design reduces reliance on anticoagulants, decreasing side effects and simplifying treatment.
  - allowing for some regurgitation

Project Aim

Central Hypothesis: The newly designed monoleaflet mechanical heart valve will significantly improve hemodynamic performance and reduce thrombotic risk compared to existing mechanical valves, thereby enhancing patient outcomes

Project Objectives

Objective 1: Develop a functional design of a monoleaflet mechanical heart valve.

- Task 1: Design the prototype of a monoleaflet valve with different opening and closing mechanism than the original valve based on ideas drawn from current valves
- Task 2: Do CAD simulations to test the opening and closing mechanism of the valves
- Task 3: 3D print any prototype that has potential to better see if the valve opens and close as it should, making sure that it can close and open 90°

Objective 2: Evaluate the functionality of mechanical heart valve in a simulated environment

- Task 1: Fabricate a prototype in comsol based on the optimized design.
- Task 2: obtain the benchmark data from graduates to evaluate the mechanical performance and reliability of the valve versus current valves

Research Plan

- We will 3D printed models of the mechanical heart valve
- Each test (e.g., durability test, fluid dynamics simulation) will be repeated at least 10 times to ensure the reliability of the results
- For each type of valve design and material tested, we will conduct 3 trials on each valves to determine if the results were statistically significant too see which valve tested better.

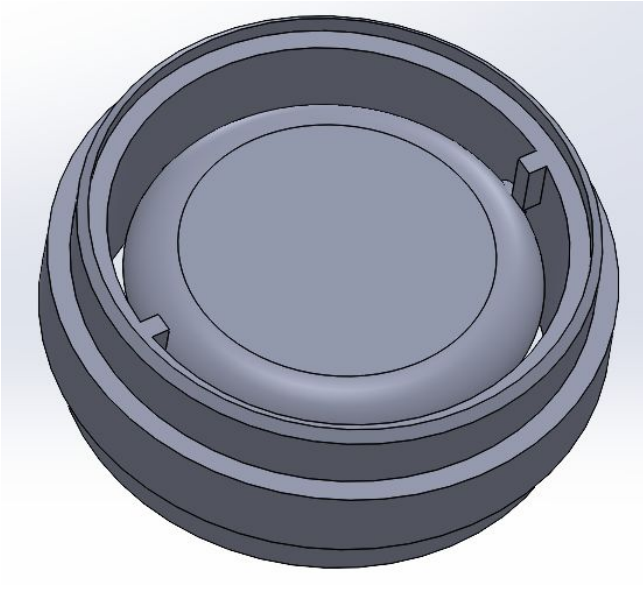

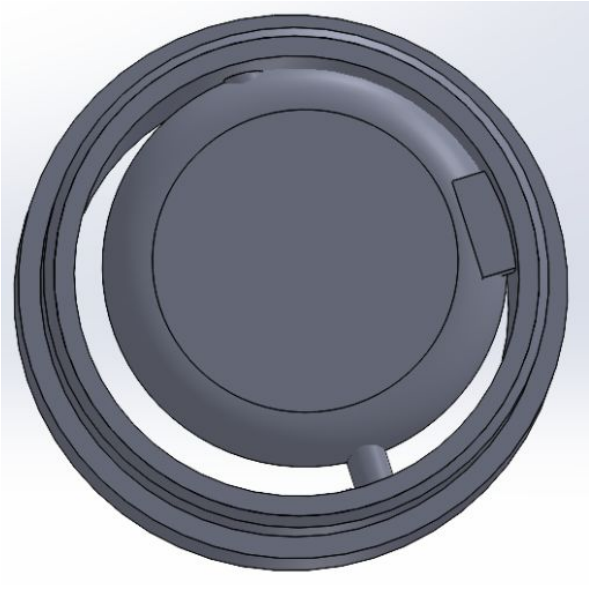

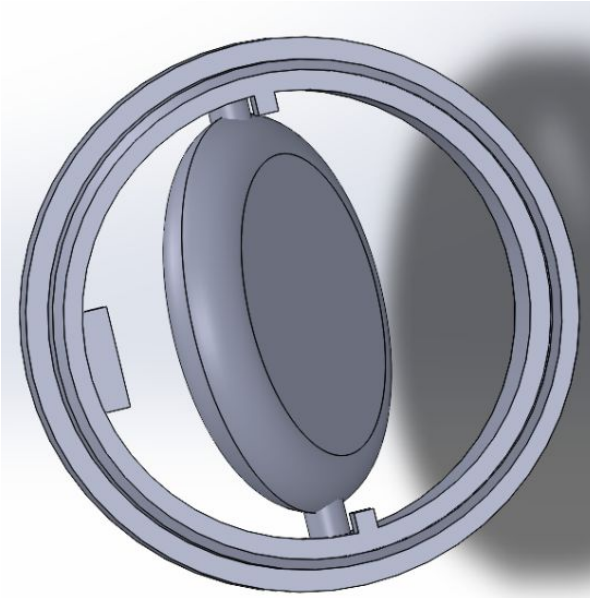

One of our Designs

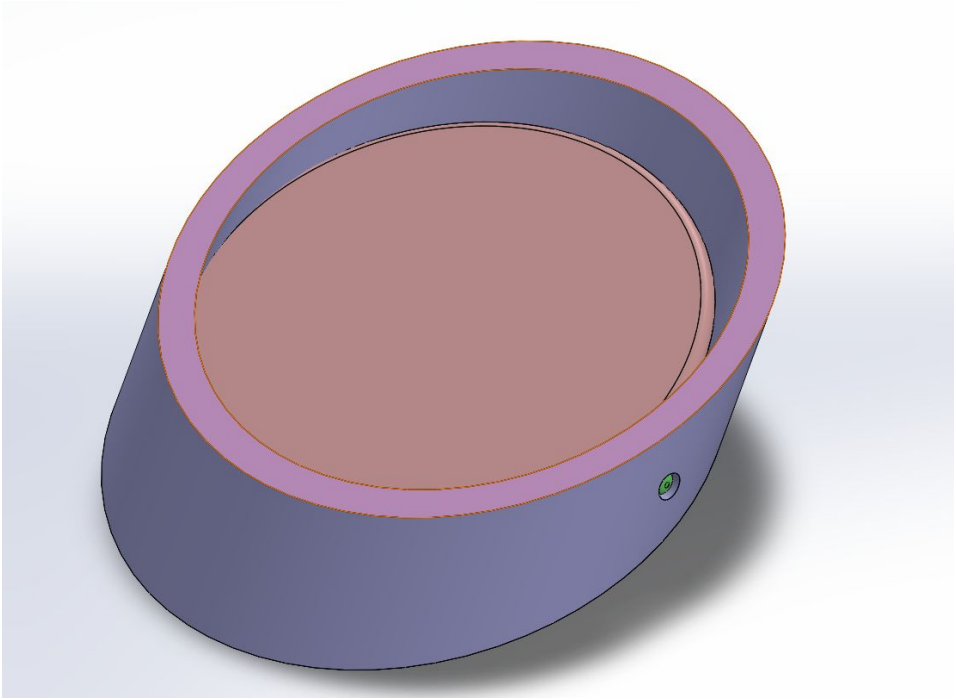

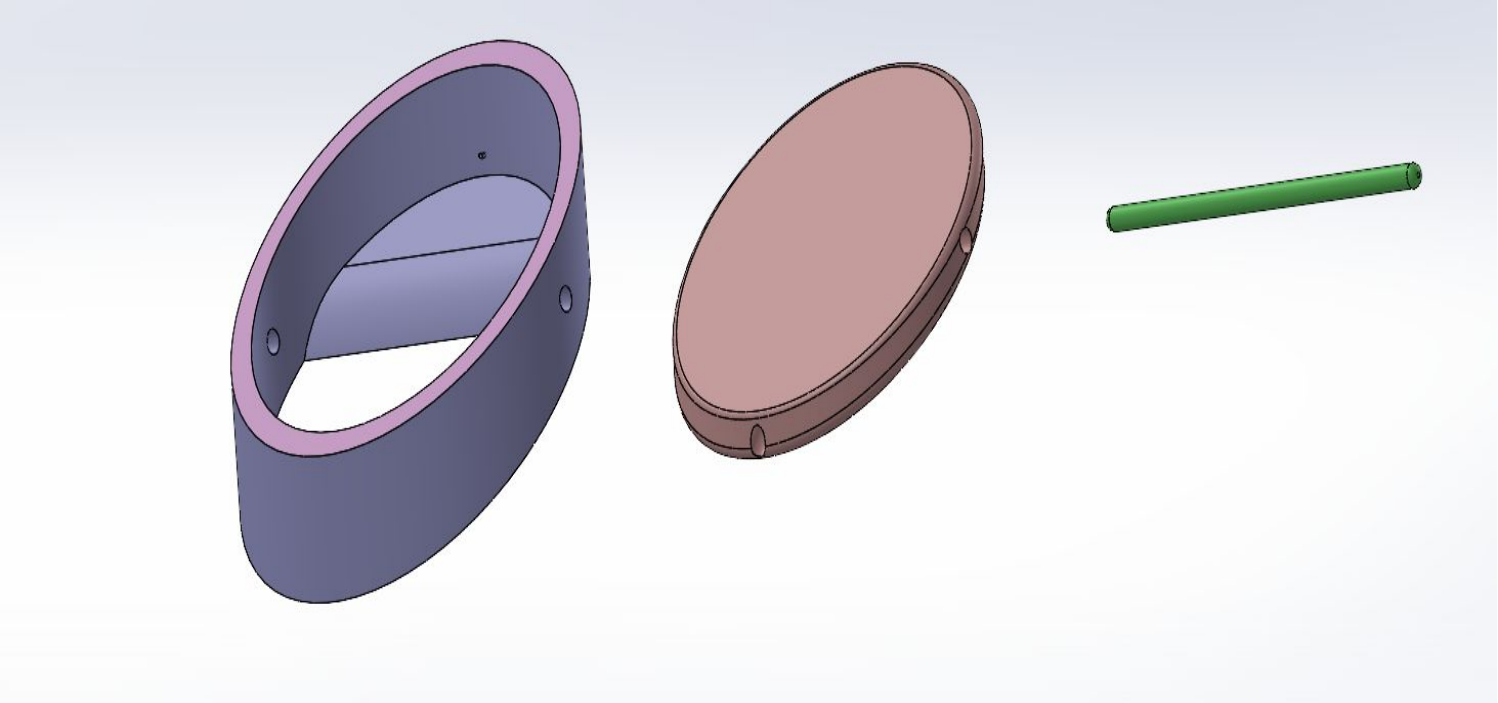

Research Plan

Equipment/Technology	Purpose
3D Printer	To create physical prototypes of the heart valve designs for visualizing opening and close mechanism
CAD Software	To design and simulate the opening and closing mechanisms of the heart valves
COMSOL Software	To simulate fluid dynamics and mechanical stress within the heart valve prototypes

Research Method

- 3D print our monoleaflet valve for physical visualization
- Equipment: 3D printer, Comsol, SolidWorks
- As stated in research plan, durability test and fluid dynamic simulation will be tested 10 times, 3 trials on each valve design
- The results will be displayed in the form of graphs, tables, charts, and simulations
- The data gathered from the simulation will be analyzed using softwares like ANOVA and t-tests

Expected Outcomes and Broader Impacts

Expectations

- We expect our new design of the monoleaflet valve design to perform better than the bi-leaflet and tri-leaflet that are already out on the market.

Broader Impacts

- It should be more cost efficient bot only for the engineers and manufacturers to make but also for the patients to pay for since there is less material to purchase and use.

SJSU SAN JOSÉ STATE UNIVERSITY

Fall 2024

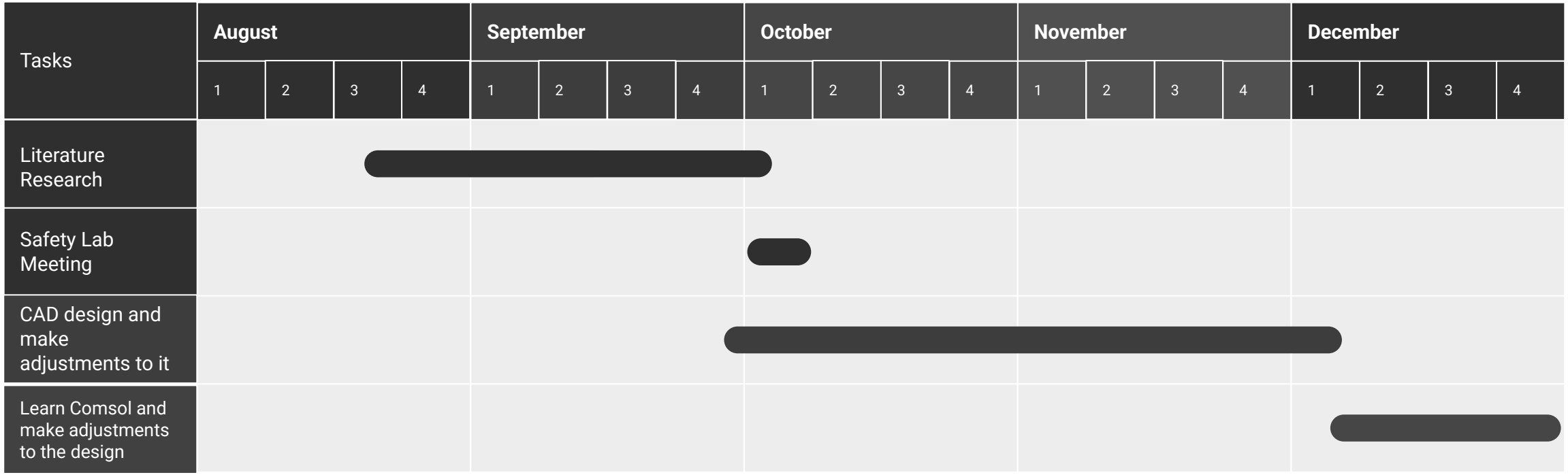

SJSU SAN JOSÉ STATE UNIVERSITY

Spring 2025

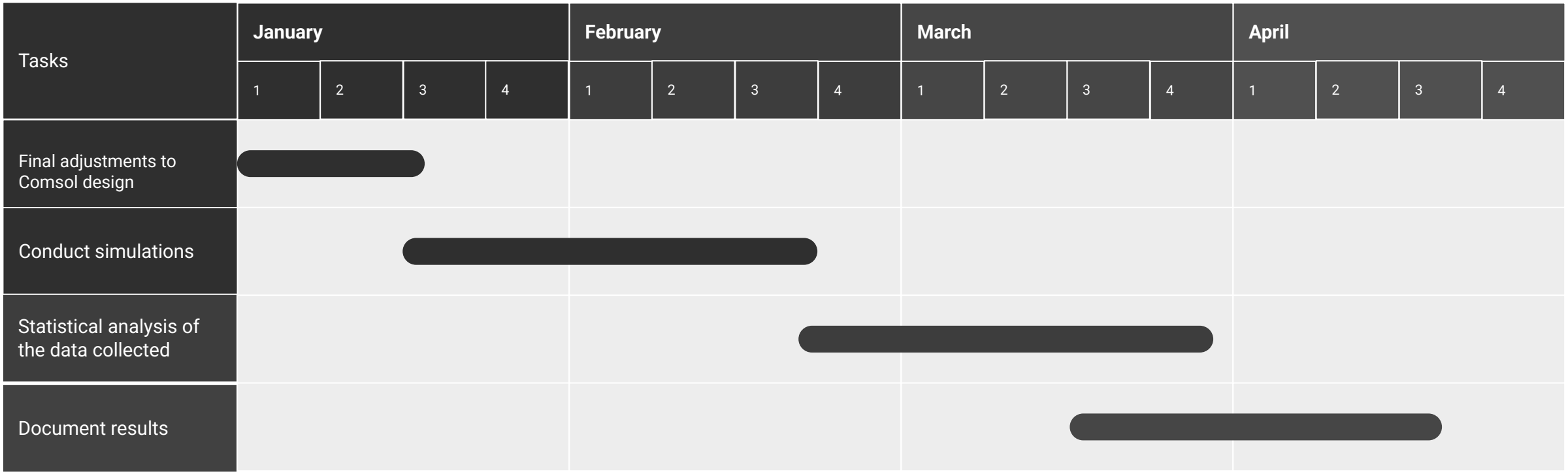

Budget

- Equipment Cost
  - Price for each 3D prints = $0
    - Free for SJSU students
  - COMSOL academic license = ~$1495 per year
    - Divided by the number of students in SJSU that use it and then multiplied by 3 to account for our team.

References

- Dasi, L. P., Simon, H. A., Sucosky, P., & Yoganathan, A. P. (2009, February). *Fluid Mechanics of artificial heart valves*. Clinical and experimental pharmacology & physiology. https://pmc.ncbi.nlm.nih.gov/articles/PMC2752693/
- Kumar, T., Singh, A., Thakre, S., Acharya, S., Shukla, S., & Kumar, S. (2023, July 19). *Scientific Evolution of Artificial Heart Valves: A narrative review*. Cureus. https://pmc.ncbi.nlm.nih.gov/articles/PMC10438674/