BME 135 Term Project

Laparoscopy Instrument

Aaheli D., Praagna D., Elaine H.,

Sunayana P., & Samantha Y.

What is Laparoscopy?

- It is a minimally invasive procedure that checks the patient's organs in the abdomen area
  - Small incisions are made for inserting the instruments

- Other uses of this procedure include...
  - Removal of damaged/diseased organs
  - Extract a tissue sample for further testing

- Complications include...
  - Minor: infection, feeling sick
  - Serious: damage to other organs

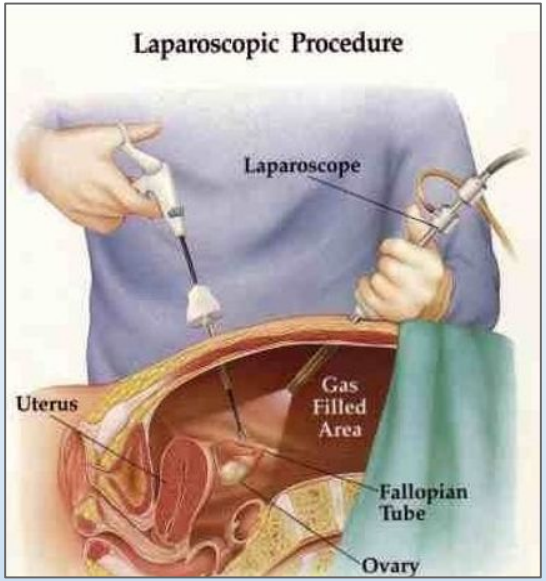

https://www.denverfertilitycare.com/infertility/surgery/laparoscopy-hysteroscopy

Laparoscopic Instruments

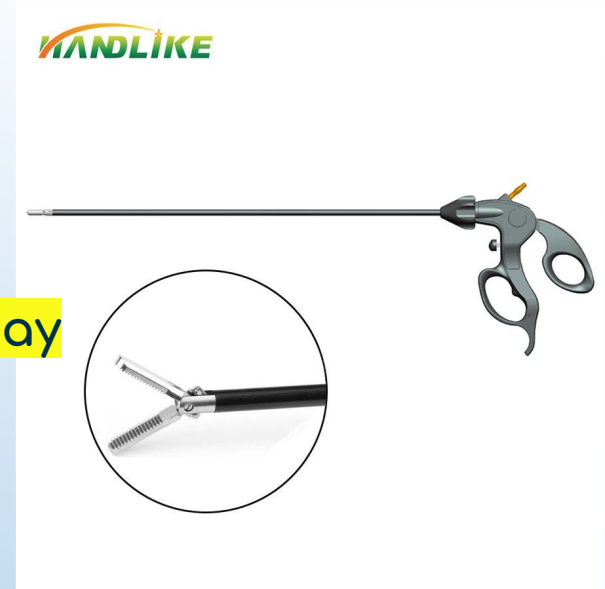

- Main tools for the procedure
  - Camera for visuals (separate device)
  - Graspers/Scissors <- main focus of today
  - Light to see what is going on (separate device)

- Complaint
  - Limited mobility of the device
    - Causes increase of incisions that are made -> “chopstick” effect

Design Plan

- Class II Device
- Product Code (GCJ)
- STI Modification:
  - Medtronic's Covidien Endo-Shears 5 mm Single Use Instrument
- Subtraction → Rotation Collar associated with Graspers + Side Handles

Napkin Design

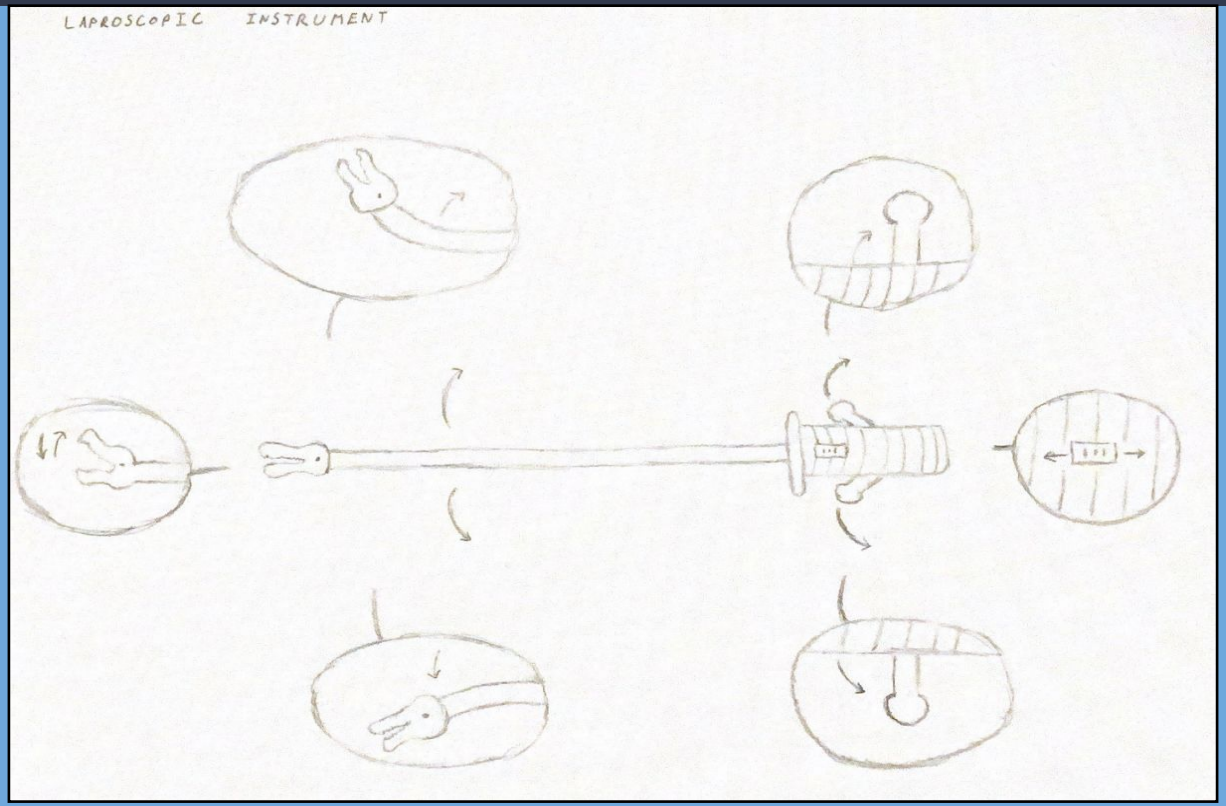

FDA Consideration

- Class 2 Device
- FDA Form 2892
- Quality Regulations
  - ISO 8600:2015 → endotherapy devices
- Device and Testing Regulations
  - IEC 62366:2015 → usability of the medical device
- 510 (K) Premarket Notification

User Needs

Current design problem:

- Restriction on freedom of movement
- Ergonomic of device handle brings discomfort to user
    - Leads to fatigue for the users
- Specialized training needed to learn techniques of using the device

Modifications to the design:

- Steerability - perform complex maneuvers
- Handle would be easier use for the the surgeon especially during long procedures
- Accidental injury has a low chance of occuring due to device's precise movement

Design Inputs

Criteria	Details
Current Device	Single Use Laparoscopic Instrument
Dimensions	35cm shaft length, 15mm grasper length, 5mm shaft diameter
Functions	• Helps during surgeries, makes small incisions where needed • Hold and manipulate tissue during surgery
Comfortability	• User is comfortable using device for long periods of time • Does not bring discomfort to the patient

Design Outputs

Criteria	Details
Target Audience	- Doctors - Surgeons
Features	- Steerability - Clamp mechanism
Materials	- 316L Stainless Steel - Nitinol - Polyetheretherketone (PEEK) - Polytetrafluoroethylene (PTFE)
Suppliers	- Ubrich - EdgeTech Industries LLC - Fluoro Pacific
Manufacturing Criteria	- Followed Good Manufacturing Practices (GMP) in 21 CFR Part 820
FDA Regulations	- FDA Form 2892 - 510(K) clearance - PMA
User Guidance	- Do not leave in reach of children. - Sanitize before use.

Solidworks Model - Final Design

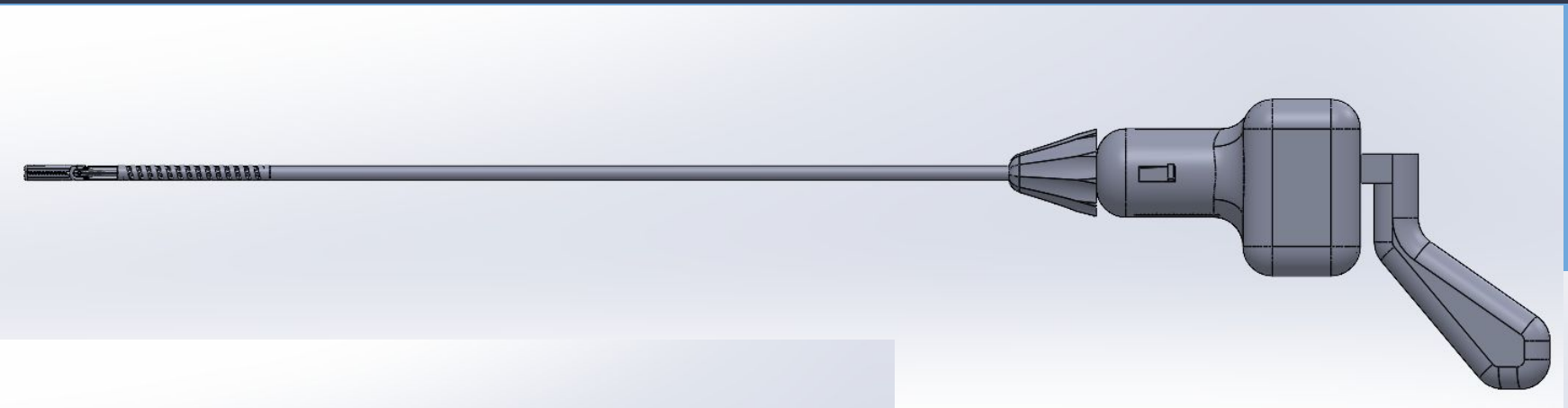

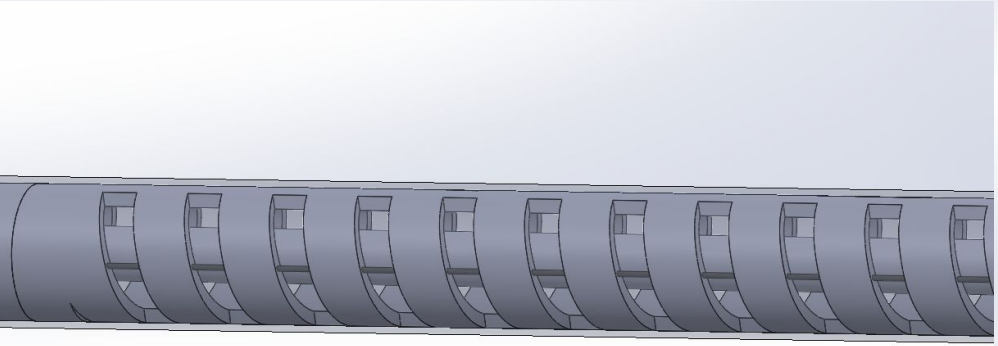

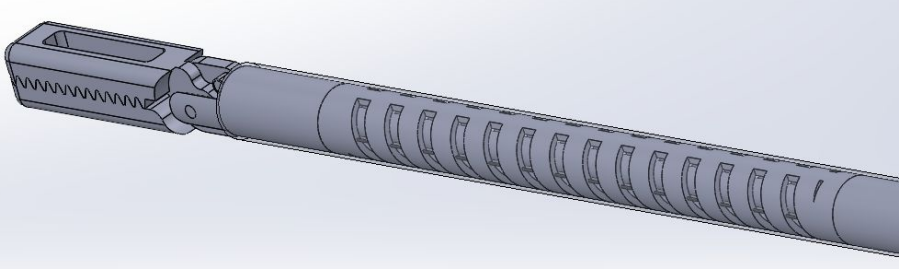

Solidworks Model (Cont.)

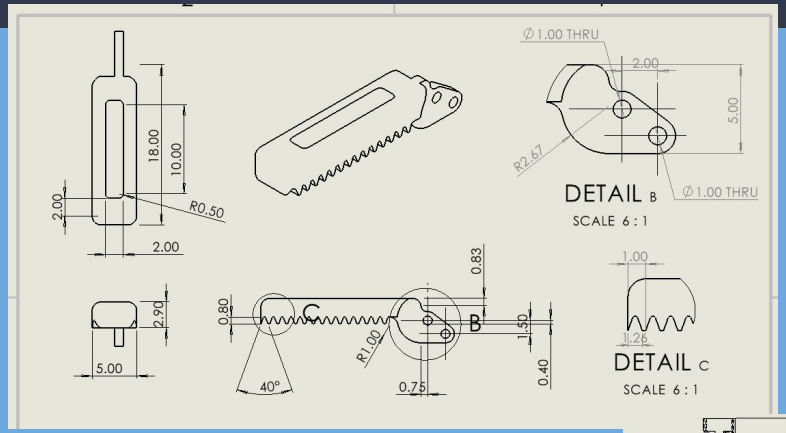

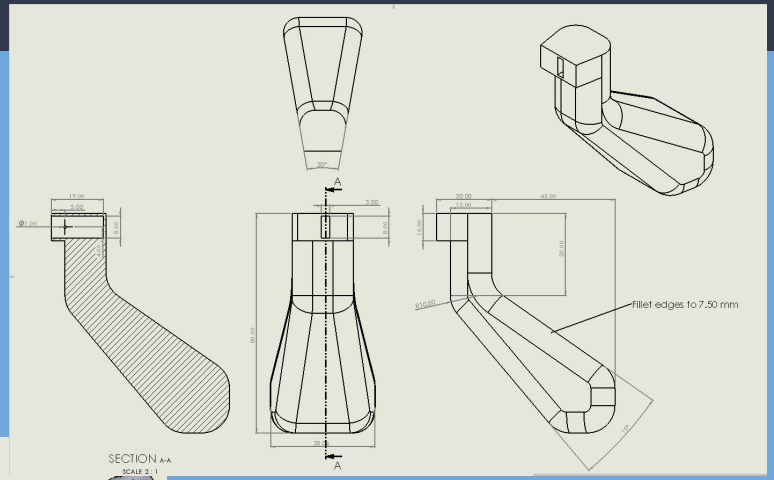

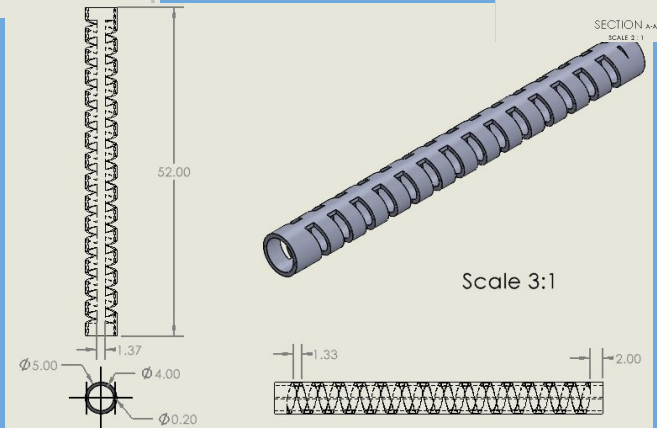

Mechanism to control steering

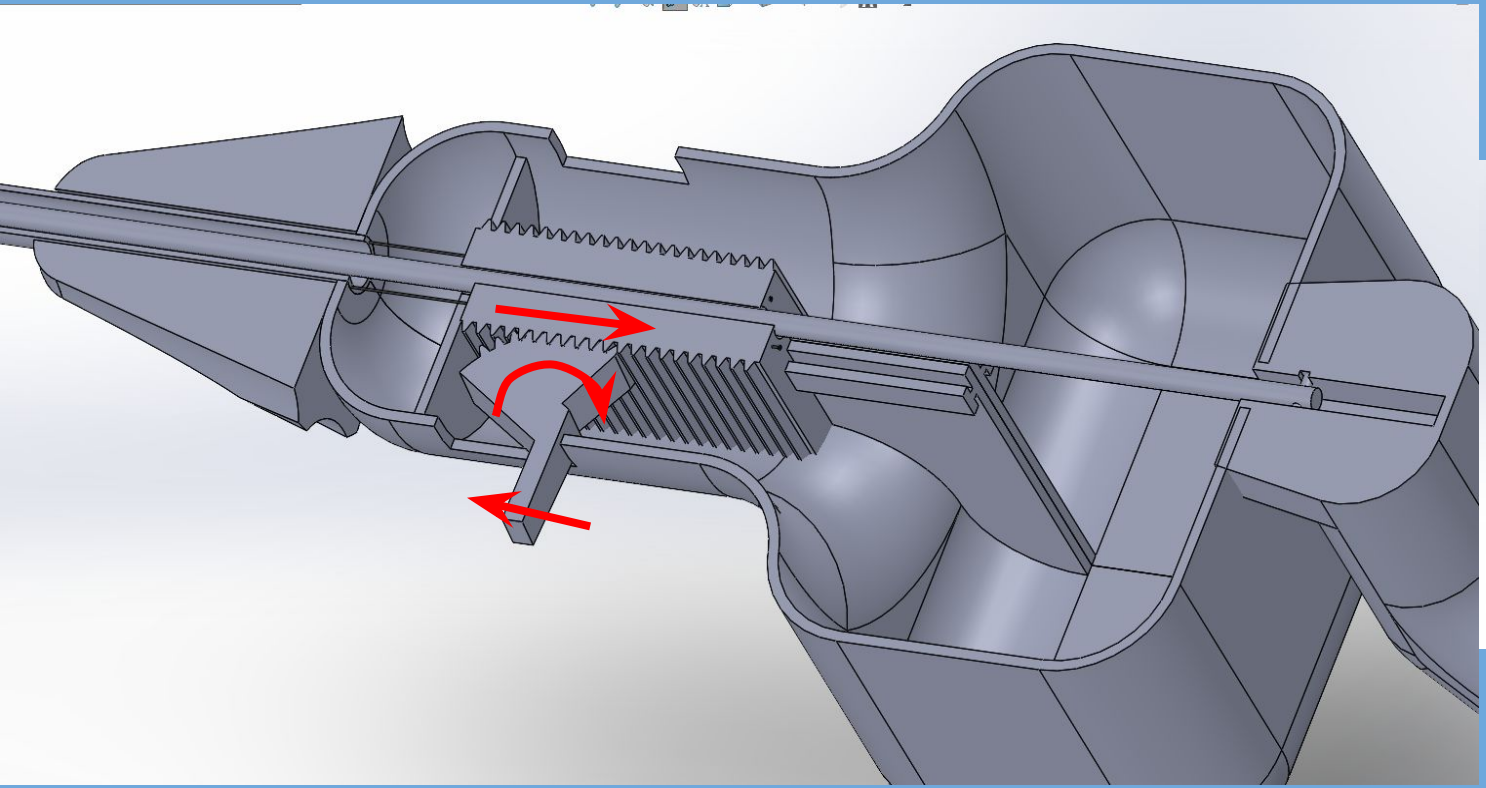

Top-down View:
Left guidewire pulled

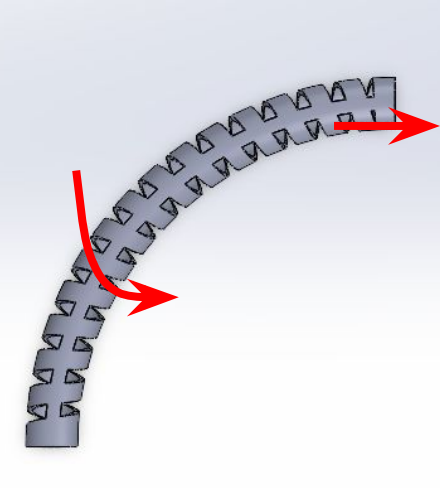

Mechanism to control graspers

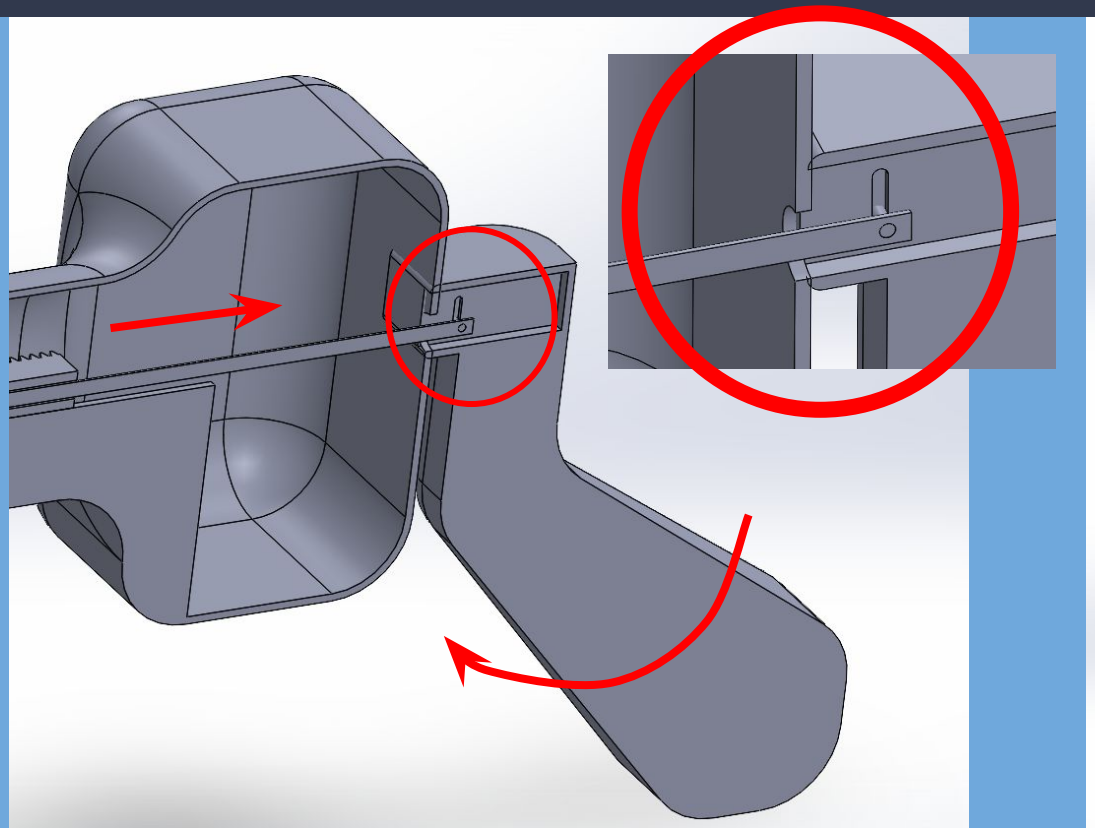

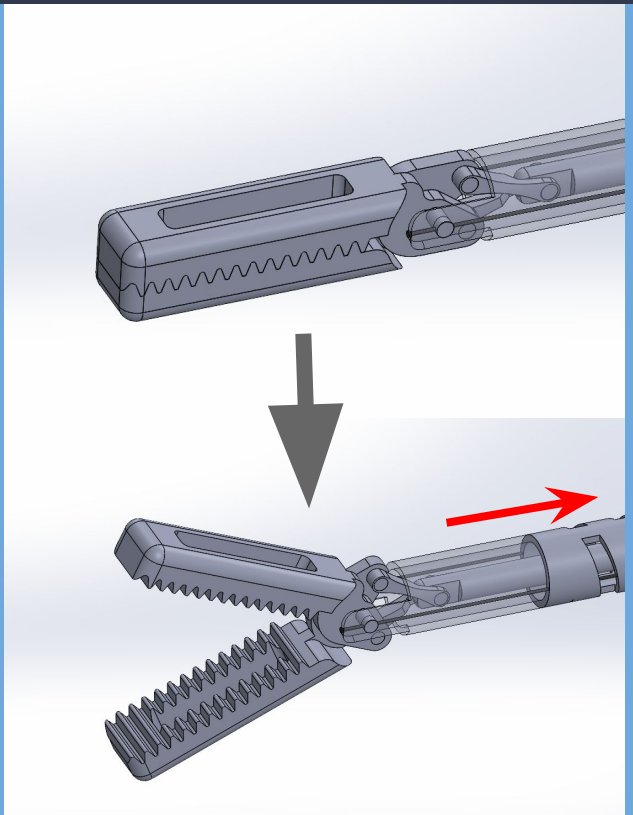

Material Considerations

Material	**Part**	**Reason of Choice**
316L Stainless Steel	Graspers	• Corrosion Resistant • Biocompatibility
Nitinol (Nickel Titanium)	Spiral, Cables	• High Elasticity • Shape Memory
Polyetheretherketone (PEEK)	Connector between Grasper and Rod	• Lightweight • Biocompatibility
Polytetrafluoroethylene (PTFE)	Outer Sheath	• High Elasticity • Biocompatibility

Tests

- Simulation/clinical test
  - Testing in a controlled setting to see if it functions correctly
    - Participants (practitioner surgeons) would be performing specific basic surgerial tasks

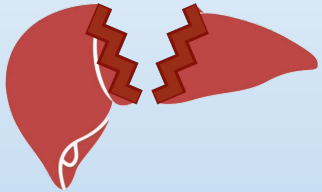

- Tissue Damage test
  - Assessing for damage to tissues/organs

- Biocompatible test
  - Checking if the device's materials are up to standard
    - Types of test
      - Cytotoxicity, Preclinical safety, etc.

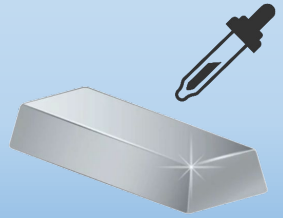

Acknowledgements

Aaheli D. - FDA considerations, Design Outputs

Praagna D. - FDA considerations, Material Consideration

Elaine H. - Test, Laparoscopy

Sunayana P. - Solidworks Model

Samantha Y. - User needs, Design Inputs

References

1. Basunbul, L. I., Alhazmi, L. S. S., Almughamisi, S. A., Aljuaid, N. M., Rizk, H., & Moshref, R. (2022, February 15). Recent technical developments in the field of laparoscopic surgery: A literature review. Cureus. https://www.ncbi.nlm.nih.gov/pmc/articles/PMC8929761/

2. .Chen, C.-H., Chang, H., Huang, T.-S., Liu, T.-P., Liu, H.-C., & Chen, C.-H. (2019, April 12). *Significance of steerable laparoscopic instrument: Usability-based evaluation in a simulation model*. Health Technology. https://ht.amegroups.org/article/view/5006/html

3. Draft guidance for the preparation of a premarket notification for ... (n.d.-b). https://www.fda.gov/media/72392/download

4. NHS. (2018, August 1). *Overview - Laparoscopy (keyhole surgery)*. NHS choices. https://www.nhs.uk/conditions/laparoscopy/

5. *Products*. Edgetech Industries. (n.d.). https://www.edge-techind.com/category/Nitinol-66-1.html

6. *PTFE and Peek Processors and fluoro polymer engineers*. Fluoro Pacific. (n.d.). https://fluoropacific.com/

7. Shang, Y., Guo, H., Zhang, D., Xue, F., Yan, X., Shi, A., Dong, D., Wang, S., Ma, F., Wang, H., Li, J., Liu, X., Luo, R., Wu, R., & Lv, Y. (2017). An application research on a novel internal grasper platform and magnetic anchoring guide system (MAGS) in laparoscopic surgery. *Surgical Endoscopy*, *31*(1), 274–280. https://doi.org/10.1007/s00464-016-4968-9

8 *316l stainless steel: UNS S31603: Manufacturer*. Ulbrich. (n.d.). https://www.ulbrich.com/alloys/316l-stainless-steel-uns-s31603/

9. Wikimedia Foundation. (n.d.). *File:food and drug administration logo.svg*. Wikipedia. https://en.m.wikipedia.org/wiki/File:Food_and_Drug_Administration_logo.svg

Thanks for Listening

...Questions?