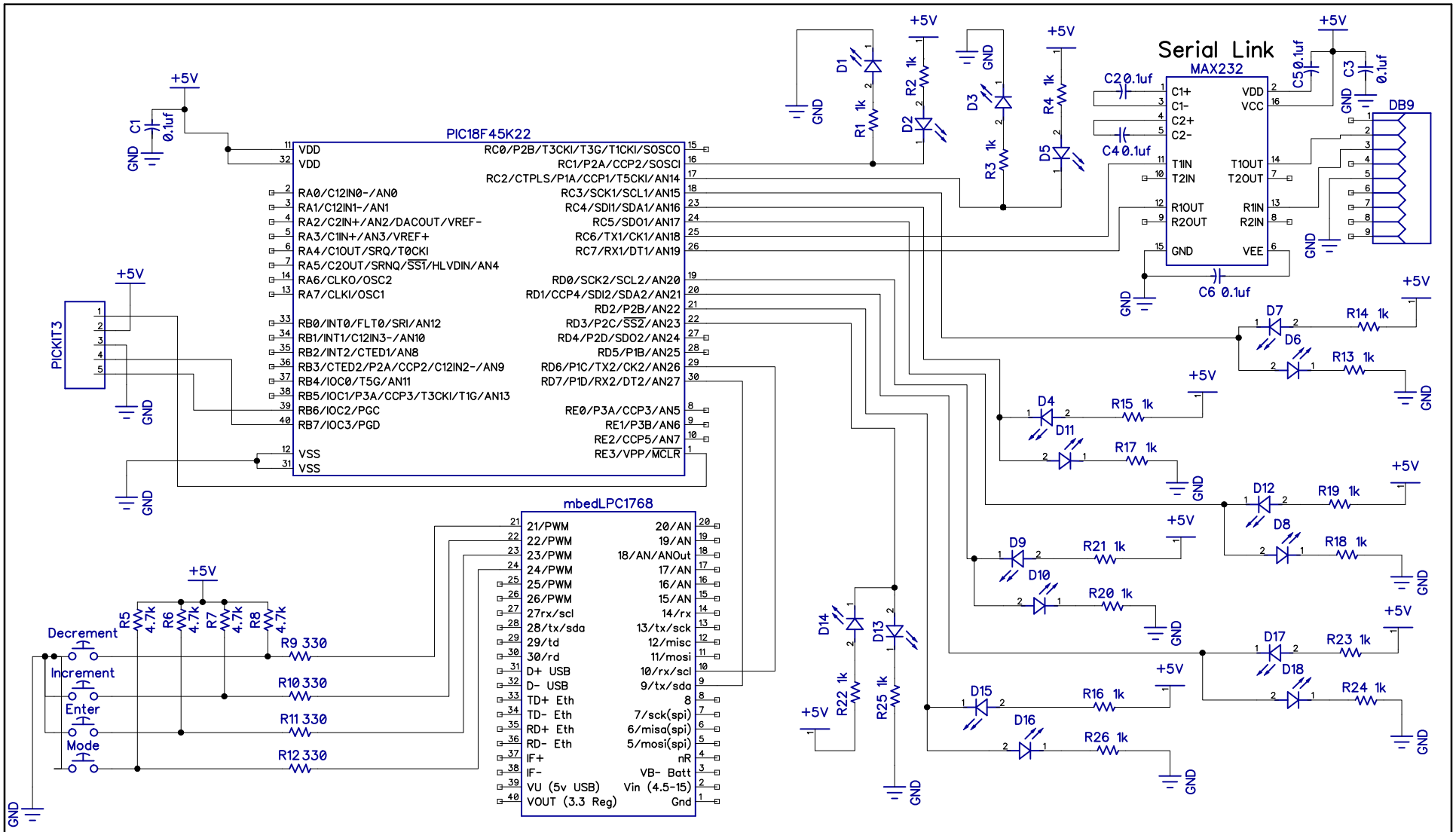

ELNC-6007-20F Embedded Systems II	TicTacToe System Schematic.			
	Description: It is a TicTacTie system using serial communication via pic and mbed.			
Modified By:	SIZE A	Created By: ASolanki	Lab: ELNC6007ASLab4	REV -
	Date:	December 09, 2020		Sheet 1