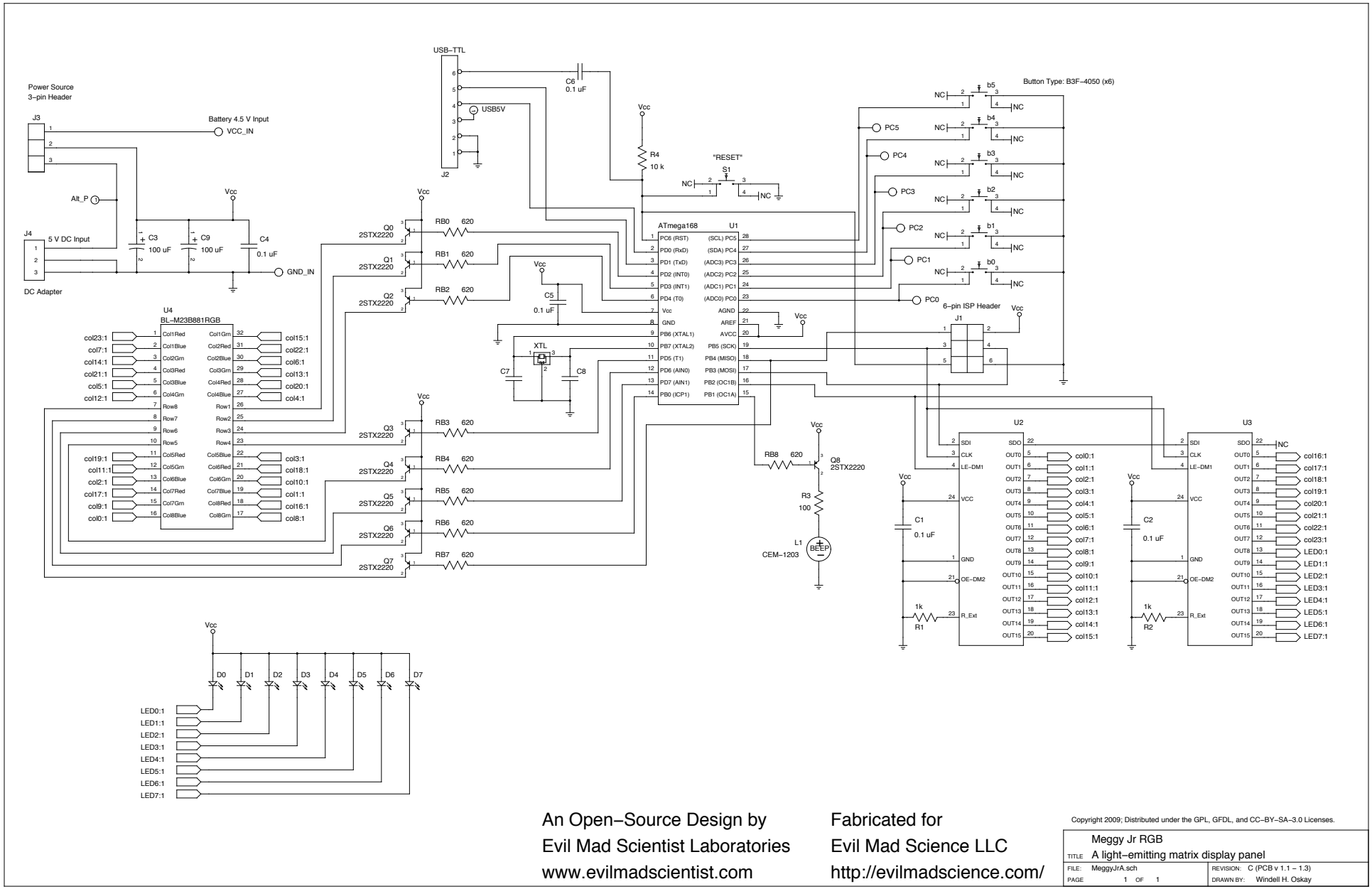


An Open–Source Design by
Evil Mad Scientist Laboratories
www.evilmadscientist.com

Fabricated for
Evil Mad Science LLC
http://evilmadscience.com/

Copyright 2009; Distributed under the GPL, GFDL, and CC–BY–SA–3.0 Licenses.

| | |
|---|---|
| | Meggy Jr RGB |
| TITLE | A light–emitting matrix display panel |
| FILE: MeggyJrA.sch | REVISION: C (PCB v 1.1 – 1.3) |
| PAGE 1 OF 1 | DRAWN BY: Windell H. Oskay |