LEADING THE WAY OF INNOVATION

EQUIPE AXM 100 Series GENERATION 2

Wafer Handling Atmospheric Robots

Milara delivers total automation. The company's hardware, software and services can manage every wafer, reticle and data movement in the fab, helping semiconductor manufacturers accelerate time-to-market while reducing their risk. Milara products are used in virtually every fab in the world.

Equipe - the world standard in wafer handling atmospheric robots

Highly functional, repeatable and dependable, Milara's Second Generation (Gen2) of Equipe Atmospheric Robot (AXM 100) series are designed to bring existing Equipe customers a fresh update to an industry titan. Design efficiency is central to the outstanding performance of these systems.

All motors, exposed belts and pulleys are located below the mounting plane which keeps particulate contamination to a minimum. Compact dimensions enable the robot to fit into smaller footprints and tighter configurations.

The 100 Series is backed by Milara's unsurpassed expertise in developing advanced automation systems and software for the semiconductor industry.

Equipe GEN2 - designed for superior performance

Featuring New generation Low-Voltage AC Servo Motor with 23-bit absolute encoder allows extreme precision control, these large motors and smooth anti-backlash transmissions allow rapid movements with no sensitivity loss within the closed-loop DC servo system.

The AXM 100's patented mechanical system has very few moving parts, and the flexible internal printed circuit boards have life expectancy of over 10 million cycles. These features, combined with a high ESD immunity tolerance, contribute to each unit's high MTBF - greater than 75,000 hours.

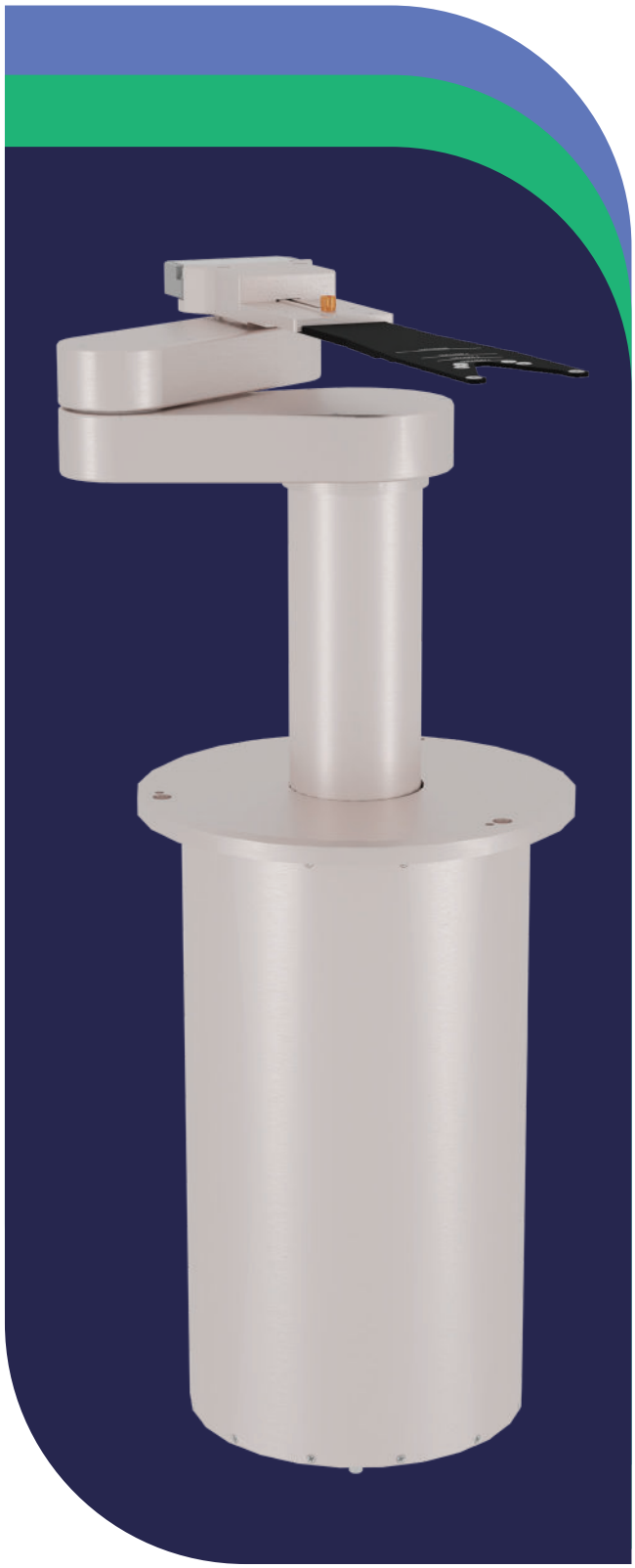

Mounting specifications	
Robot hole diameter	215.9 mm [8.500"]
Robot bolt pattern	3 x 1/4-20 thru on dia. 228.6 mm [12.350"]
End effector	4 x 4-40 on dia. 35.306 mm [1.390"]
Dead zone	25°

FEATURES

- → Vertical travel: 7"
- → Reach up to 14.4" plus end effector
- → MTBF 75,000 hours
- → Class 1 clean room compatible
- → Compact footprint
- → Free of backlash, providing highly repeatable positioning
- → High ESD tolerance
- → Macro programmable
- → Intelligent commands
- → Rapid motion with no sensitivity loss

DROP-IN REPLACEMENT

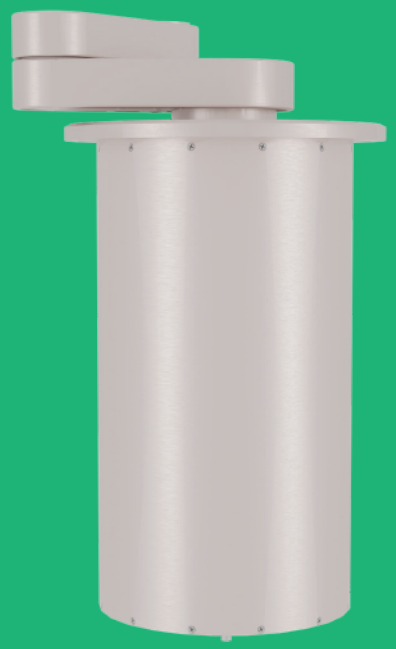

Fully compatible, direct replacement for Equipe Generation 1 Robots

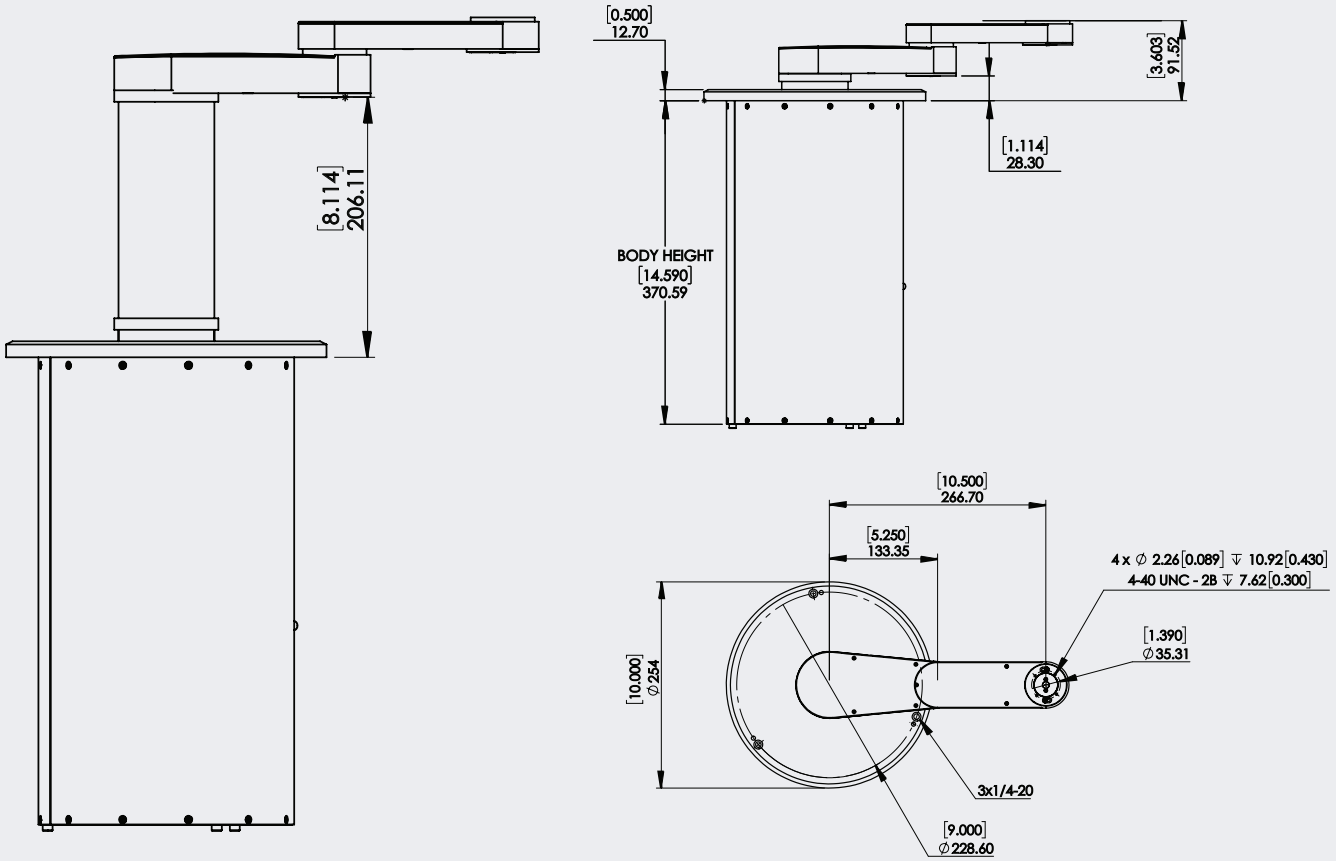

All dimensions are in mm [inch]

GEN2 intelligent controls

Each robot runs with the ESC-200 GEN2 Series Smart Controller, a fully programmable controller for wafer handling robots. The controller enables the user to supplement the standard command library with customized macro commands. The servo card utilizes “S” curve velocity profiling and high sampling frequency or better performance. Milara also offers versions of the AXM 100 that are compatible with the hardware and software of most other robots on the market.

Highly configurable for all applications

ATM robots are available with different radial reach capabilities. Standard arm links are 5.25" per link, making total available reach equal to 10.50" plus end-effector length. For applications where footprint and reach are to be minimized, 4.45" arm links are available. When extra reach is required, links of 7.20" are available. Z-axis vertical travel can be 7" (ATM100), 10" or 17" (ATM400). Available options include multiple vacuum lines and cassette scanner.

General specifications	
Model	ATM 100
Payload	0.45 kg. [1 lb.]
Substrate sensors	Vacuum, Laser Cassette Mapping (Optional)
Throughput	< 4 seconds / wafer / pick and place
Cleanliness	ISO 3 (ISO14644) / Class 1 (FED STD 209E) Clean room compatible
Weight	12.7 kg. [28 lb.]
Vacuum required	18-24 inches Hg
Power required	100-240 VAC, 50/60 Hz
MTBF	> 75,000 hours
Certified	TUV (IEC/UL 61010-1), KCs (KOSHA Certification)
Compliance	CE, UKCA, SEMI S2, S8, S22

Axes specifications	
Range of motion	
Radial axis	2 x (133.35 mm [5.25”] or 182.88 mm [7.20”])
Theta axis	335°
Z axis	177.8 mm [7”]
Repeatability (Typical)	
Radial axis	± 0.0508mm [0.002"] @3 σ
Theta axis	± 0.02° @3 σ
Z axis	± 0.0508mm [0.002"] @3 σ
Speed (Typical)	
Radial axis	60.96 cm/sec [24 inches/sec]
Theta axis	360°/sec
Z axis	25.4 cm/sec [10 inches/sec]

49 Maple Str., Milford, MA 01757, USA +1.508.533.5322 sales@milarasmt.com www.milarasmt.com