LEADING THE WAY OF INNOVATION

H1 Wafer Handling Robots

Diamond Series

The Diamond H1 series atmospheric robots represent a significant engineering advancement in the design and reliability of wafer handling equipment.

Benefiting from technologically superior components, the robots utilize ultra low inertia, high-response brushless servomotors coupled with zero-backlash Harmonic Drive® gears to achieve greatly enhanced dexterity and precision.

The innovative, all-in-one design incorporates the motion controller, servo amplifiers, and power supply within the robot's industry standard footprint.

High-strength structural members enable top, bottom or side mount configurations without compromising the system rigidity.

A 32-bit, real-time kernel delivers accurate motion profiling along smooth continuous trajectories, while the distributed control architecture allows a seamless integration with linear tracks, pre-aligners, and other sub-components.

Networkable RS-485 and Ethernet interfaces complement the standard RS-232 and teach pendant connections. Powerful native wafer handling and scripting languages facilitate rapid software development for embedding the robots into an OEM application environment.

Comprehensive emulation of legacy robot "macro" commands offers a drop-in compatibility with a wide variety of existing semiconductor tools.

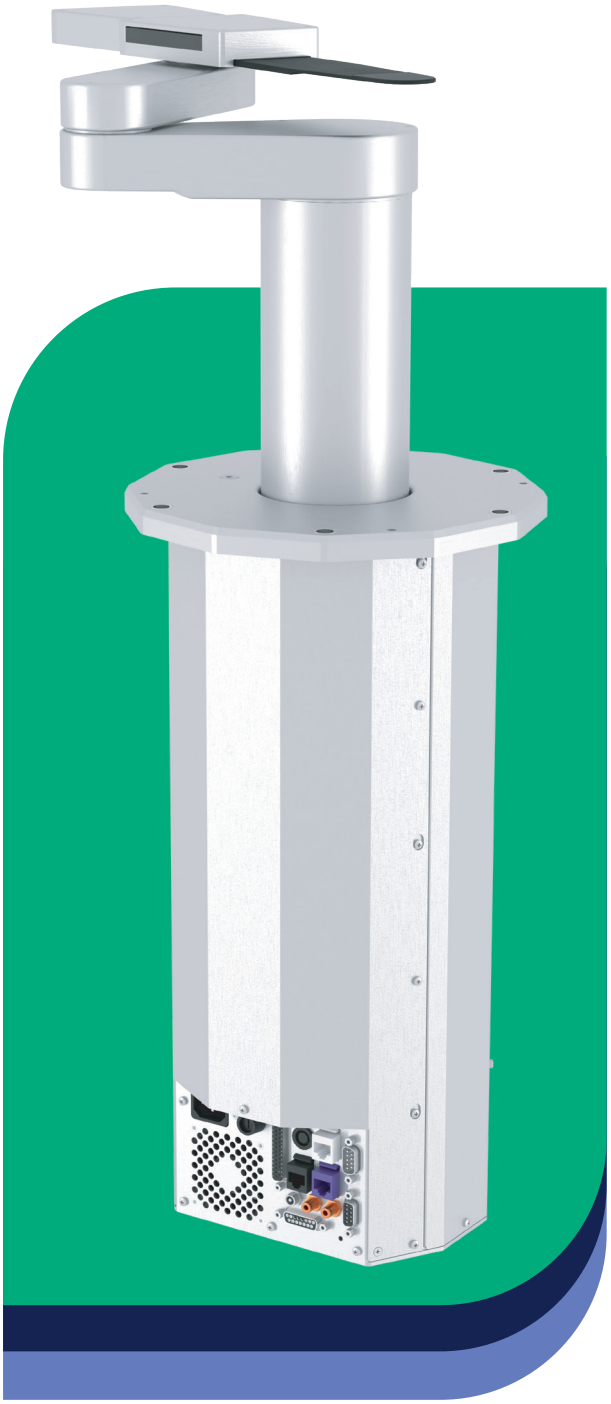

Payload
up to 2.2 lbs (1.0 kg)

Encoders
Absolute, 131072 pulse/rev

Motor type
Brushless, low inertia high response

Weight
from 40.7 lbs (18.5 kg) to 74,96 lbs (34 kg)

Cleanliness
ISO 3 (ISO14644) / Class 1 (FED STD 209E) Clean room compliant

Operating temperatures
50°F-104°F (10°C to 40°C)

Facility requirements
Voltage range
100-120AVC, 200-240VAC

Vacuum supply
1.8" Hg (-5.8psi) / 0.1CFM airflow

Compliance:
- CE and UKCA compliant
- Certified: TUV (IEC/UL 61010-1), KCs (KOSHA)
- SEMI S2, S8, S22 compliant

FEATURES

- → *Excellent structural rigidity*
- → *Modular and highly customizable design*
- → *Arm length **from 10.5" to 14.4"***
- → *Vertical travel **up to 7"***
- → *Fully integrated motion controller, servo amplifiers and power supply*
- → *High response brushless motors and precise zero-backlash **Harmonic Drive® gears***
- → *Absolute encoders eliminating the initial homing procedure*
- → *Handling radial and in-line equipment placement*
- → *Seamless integration with prealigner, linear track and other peripheral components*
- → *Standard **RS-232** interface and Ethernet (Telnet) interfaces to the host computer*
- → *Advance **32-bit** real-time motion control kernel*
- → *Powerful wafer handling firmware*
- → *Comprehensive software tools and utilities*
- → *Software emulation for legacy robot macro commands*
- → *Optional teach pendant terminal*
- → *General purpose digital inputs and outputs for custom use*
- → *Reliability - MTBF > 60,000 hours (MCBF > 10,000,000 cycles)*

H1 - 10.5" arms with 7" Z body

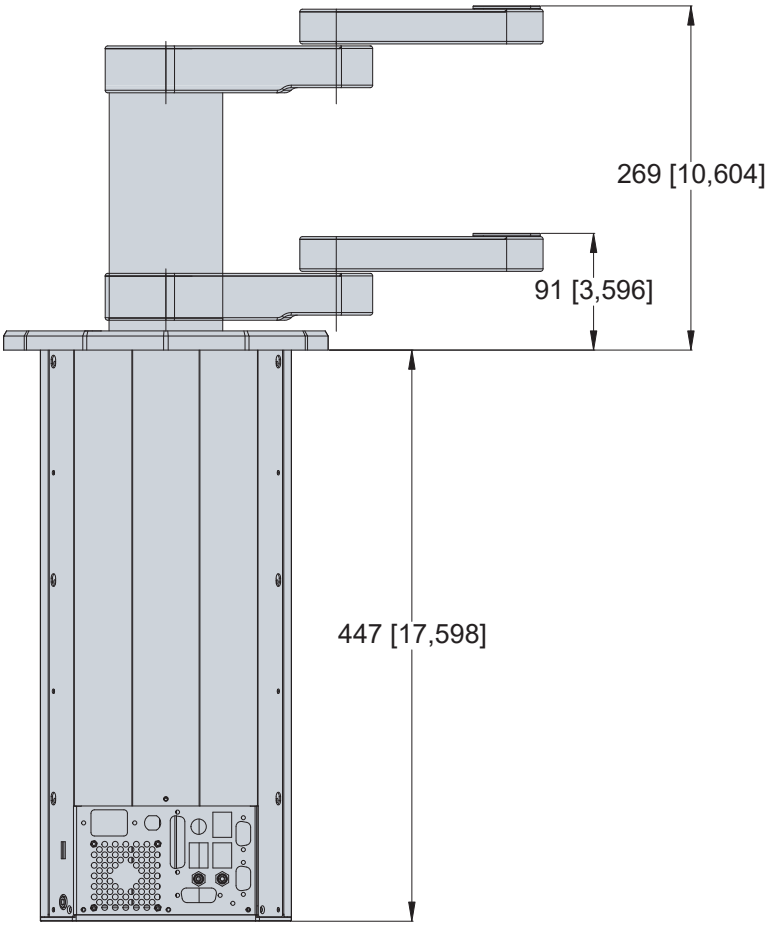

H1 - 14.4" arms with 7" Z body

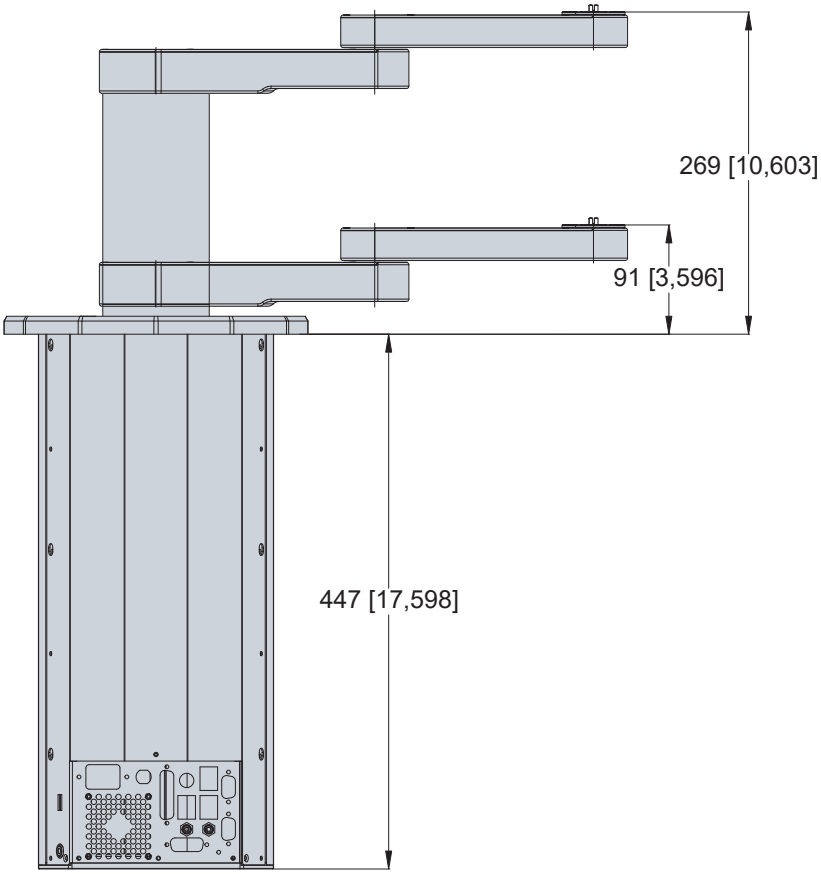

ARM CONFIGURATIONS

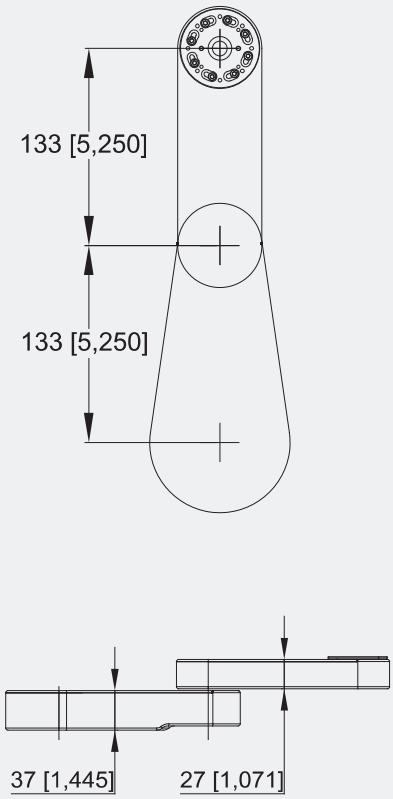

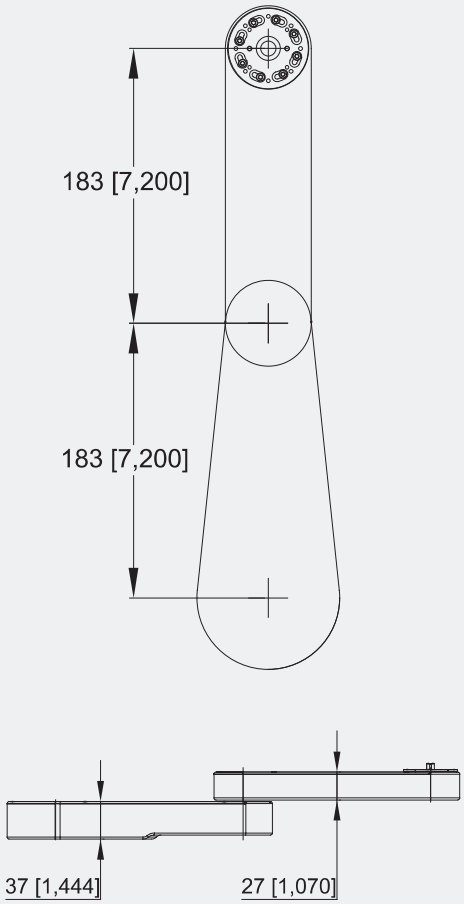

Unless otherwise specified all dimensions are in mm [inch]

Axis	Motion	Maximum velocity	Maximum acceleration	Axis Repeatability
T	> 360°	360°/s	1500°/s²	±0.01°
R	from 10.5" to 14.4"	35 inch/s	300 inch/s²	±0.001" (0.025mm)
Z	7"	18 inch/s	44 inch/s²	±0.001" (0.025mm)

Standard Mounting

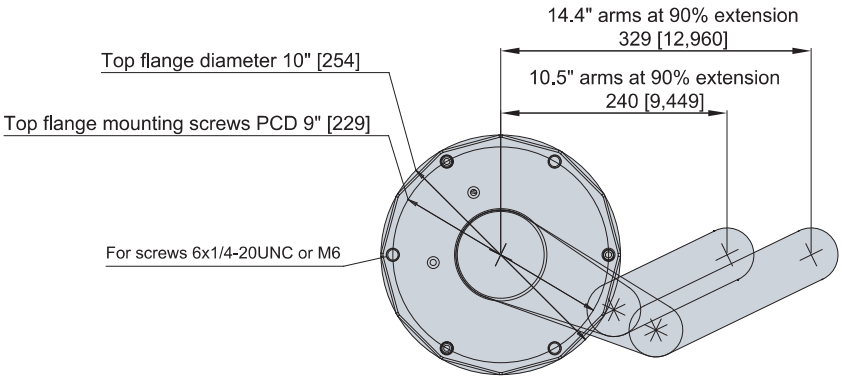

End Effector Mounting Interface

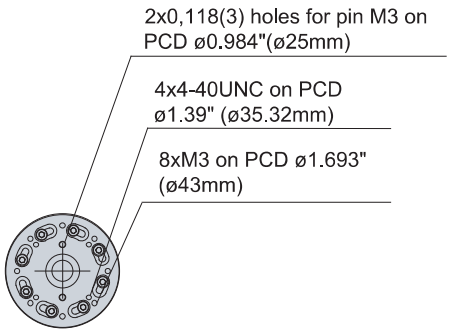

Unless otherwise specified all dimensions are in mm [inch]

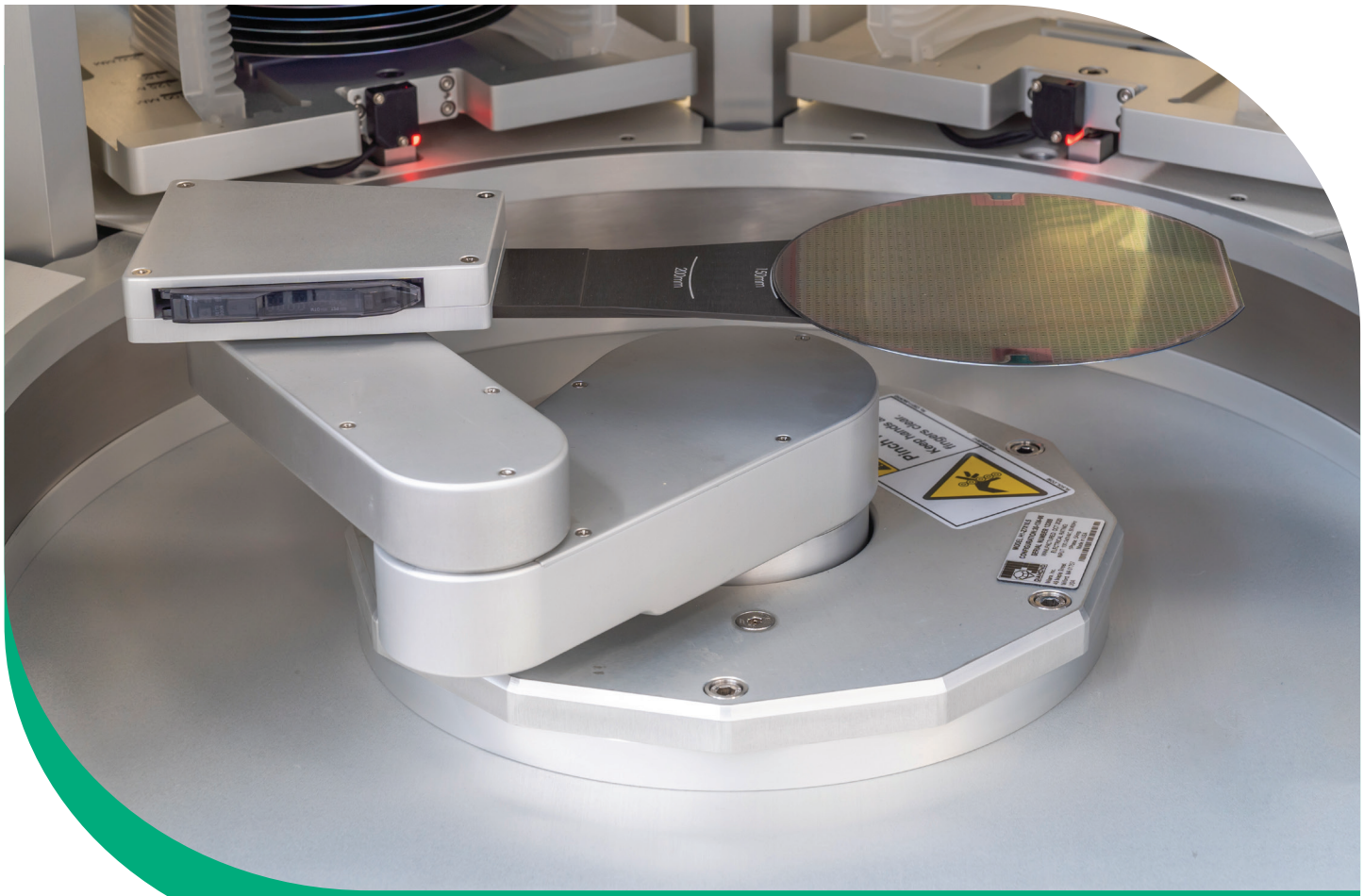

MODEL: H1-Z7X10.5

Made in USA by Milara®, Inc. (www.milarasmt.com), Designed by Logosol, Inc. (www.logosolinc.com)

49 Maple Str., Milford, MA 01757, USA +1.508.533.5322 sales@milarasmt.com