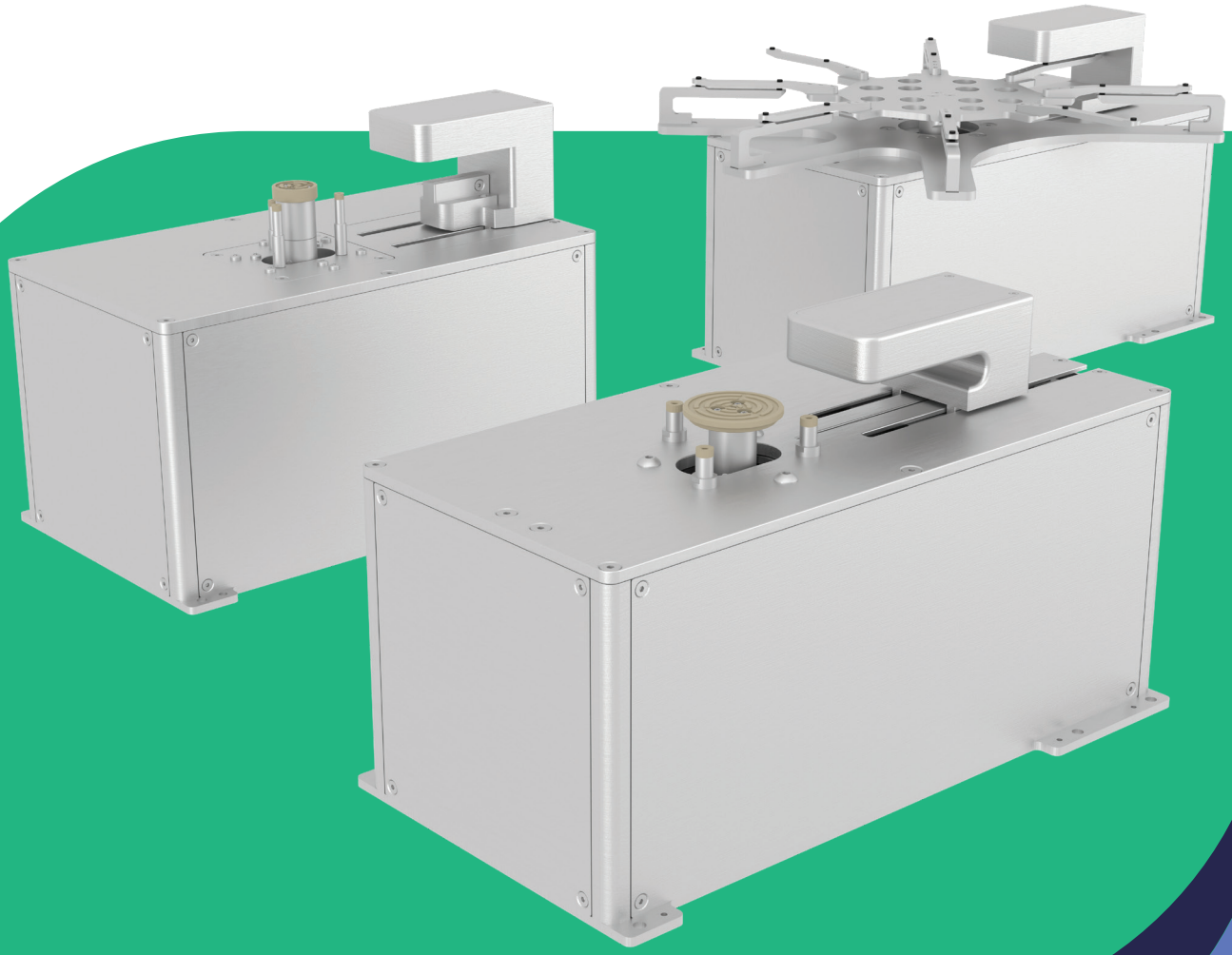

LEADING THE WAY OF INNOVATION

Milara Smart Prealigners

Full Line-up

FEATURES

→ Industry leading alignment precision using a high-resolution encoder

→ Self-calibration and self-diagnostic capabilities

→ RGB + IR light sources – allowing easier and faster edge detection for semi-transparent and glass carriers

→ Moving lighthouse allows alignment of square and round substrates with non-standard sizes

→ Nitrogen purge option for maximum cleanliness

→ Drop-in replacement for common brands in the industry

→ Adaptive light source allows easier and faster edge detection for semi-transparent and glass

SPECIFICATIONS

→ Support non-standard size wafers (e.g. 108 mm, 208 mm etc.)

→ Square substrates support

→ Flat and Notch compatibility

→ Supported Wafer Opacity - Transparent, Semi-Transparent, Opaque

→ Angular Accuracy: 0.015°

→ Centering Accuracy: 20 µm | 0.0007"

→ Initial Offset Limit: 10 mm | 0.39"

→ Alignment time: <4 sec

→ Handling: Vacuum or Gravity

→ Servo Axes: Four

SPECIFICATIONS

→ Chuck and pins materials: Peek, Tekapeek ELS nano, Semitron ESD420, Viton, Kalrez, Ceramic, etc.

→ Facilities Required: 100-240 VAC, 50-60Hz or 24 VDC|3A

→ Minimum Vacuum: 70 kPa at 100 cc|sec. airflow

→ Light source: Adaptive

→ Host Communication: RS232 or Ethernet

→ Cleanliness: ISO 3 (ISO14644) | Class 1 (FED STD 209E) Clean room compliant

→ MTBF: >60 000 hours | >10 000 000 cycles

→ Cetification: TUV (IEC|UL61010-1)

→ Compliance: SEMI S2, S8 and CE | UKCA compliant

Milara Smart Prealigner 3″ - 12″

Part Number	3133-00000-00
Wafer Diameter	From 3″ to 12″
Width	173 mm / 6.811″
Length	317 mm / 12.480″
Height	188.50 mm / 7.421″
Weight	7.420 kg

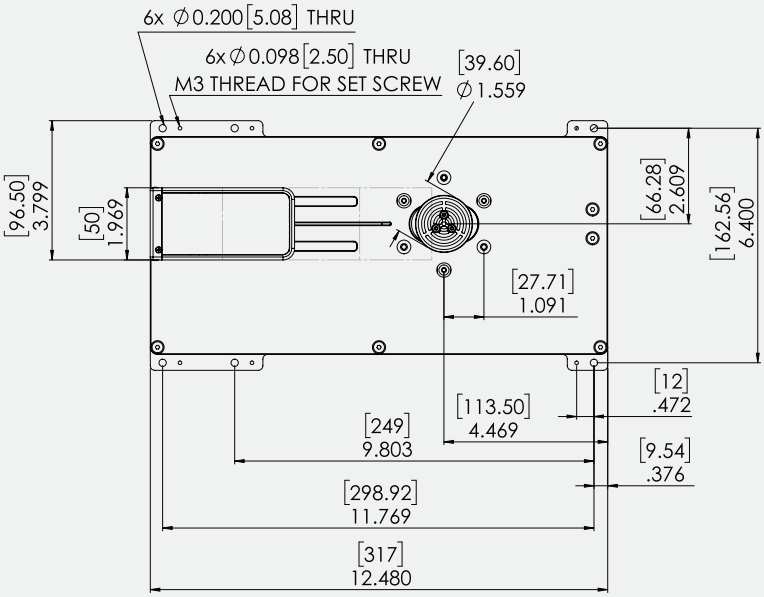

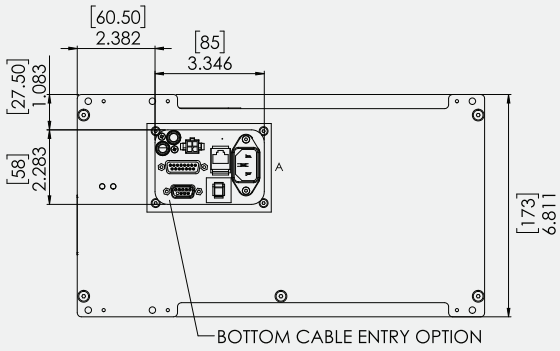

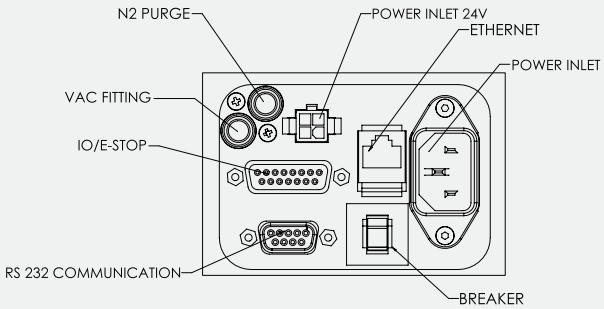

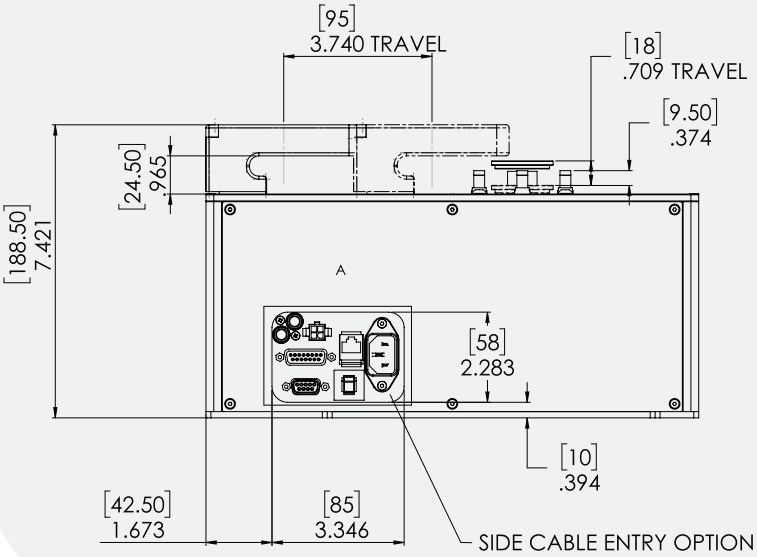

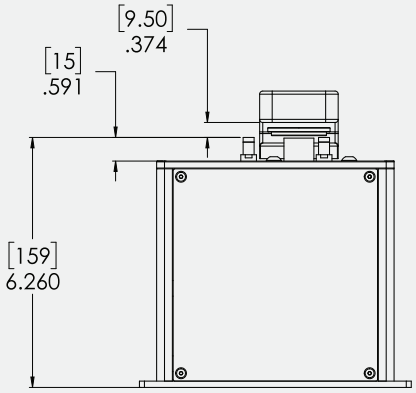

Unless otherwise specified all dimensions are in inch [mm]

Milara Smart Prealigner 2″ - 8″ Short Body

Part Number	3158-00000-00
Wafer Diameter	From 2″ to 8″
Width	173 mm / 6.811″
Length	267 mm / 10.51″
Height	208.5 mm / 8.21″
Weight	6.750 kg

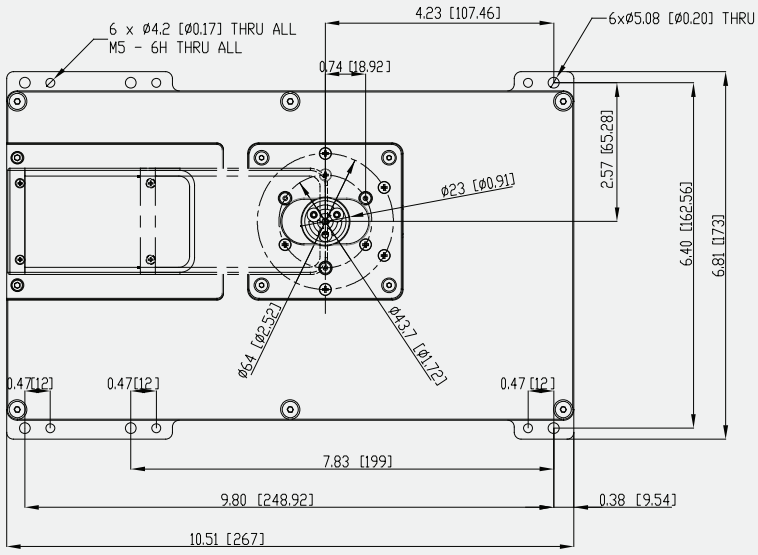

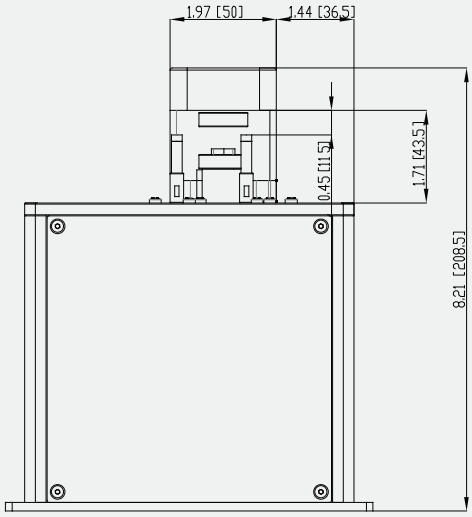

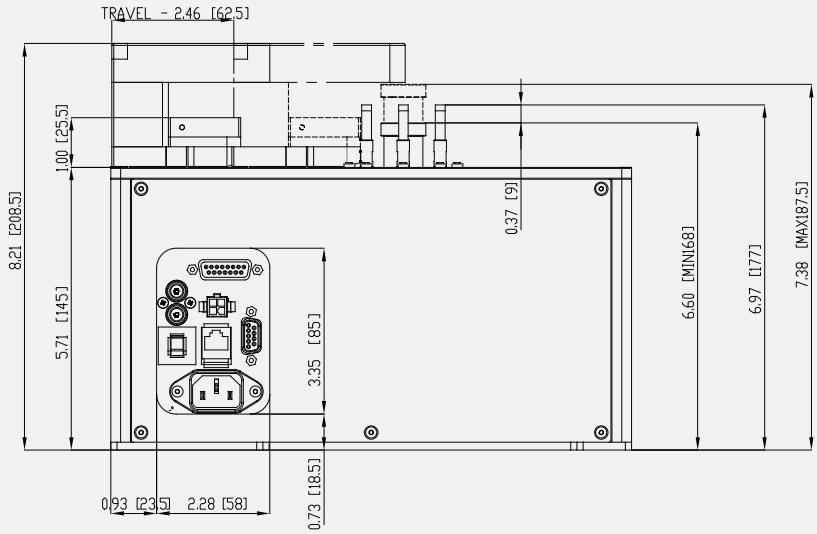

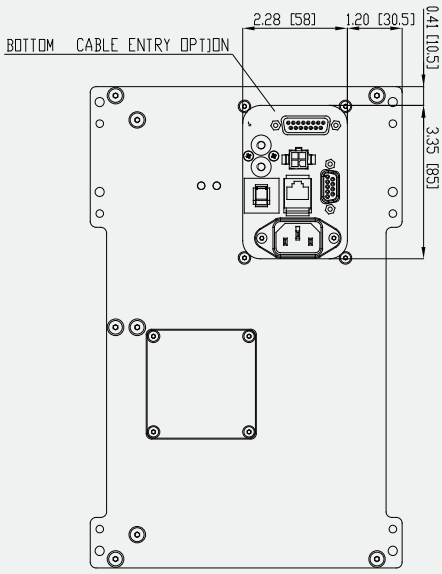

Unless otherwise specified all dimensions are in inch [mm]

Milara Smart Prealigner 8″ - 12″ Edge Grip

Part Number	3153-00000-00
Wafer Diameter	From 8″ to 12″
Width	304.80 mm / 12″
Length	332.10 mm / 13.075″
Height	203.50 mm / 8.012″
Weight	7.785 kg

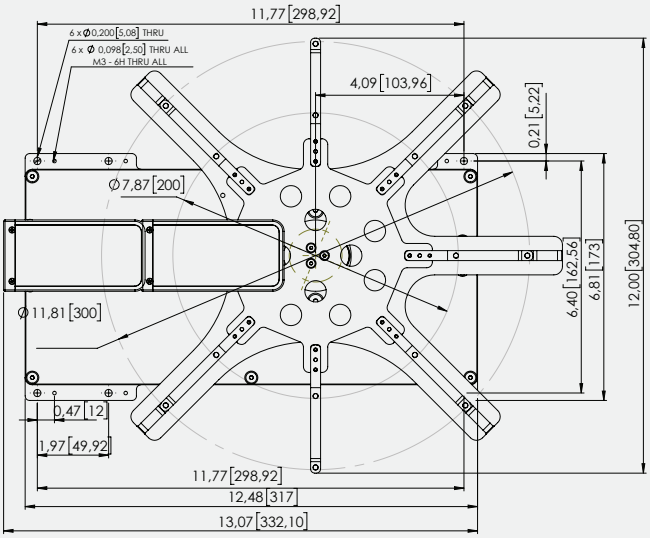

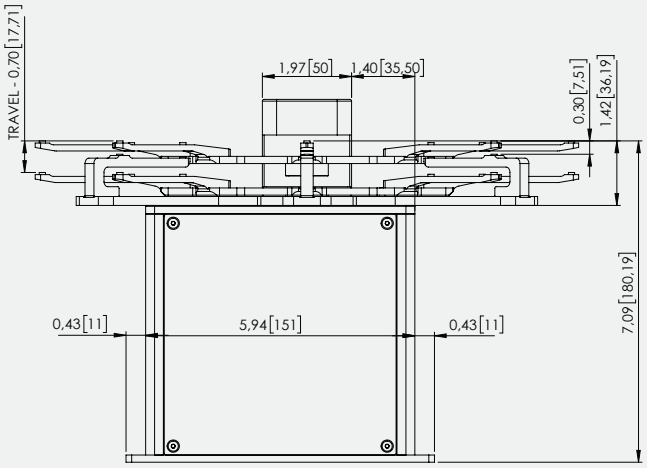

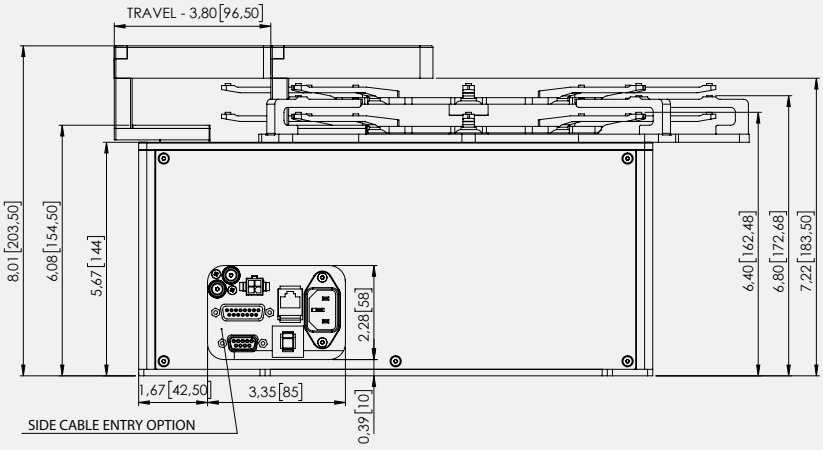

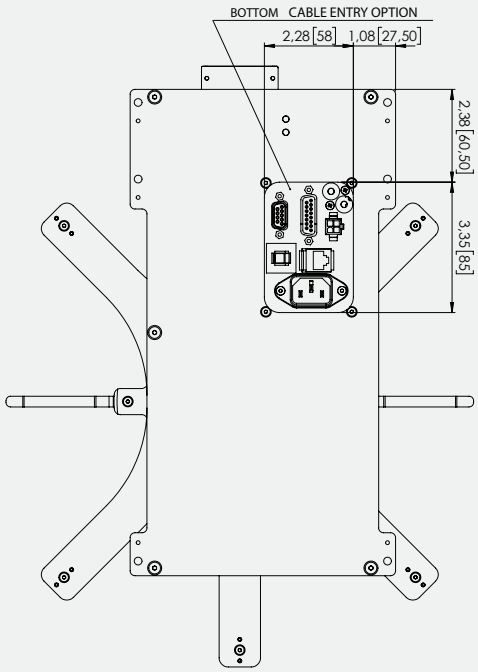

Unless otherwise specified all dimensions are in inch [mm]

Milara Smart Prealigner 6″ - 8″ Edge Grip

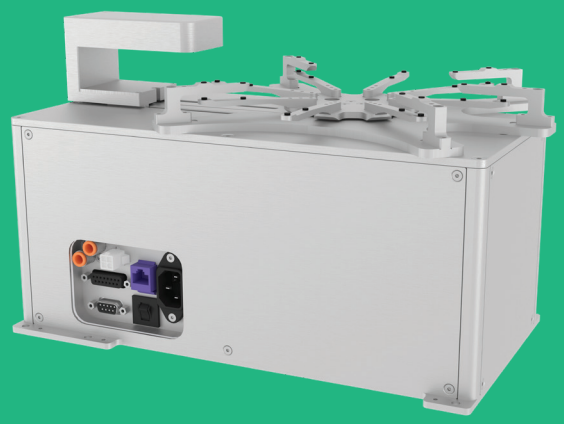

Part Number	3161-00000-00
Wafer Diameter	From 6″ to 8″
Width	203.90 mm / 8.028″
Length	332.10 mm / 13.075″
Height	203.50 mm / 8.012″
Weight	7.685 kg

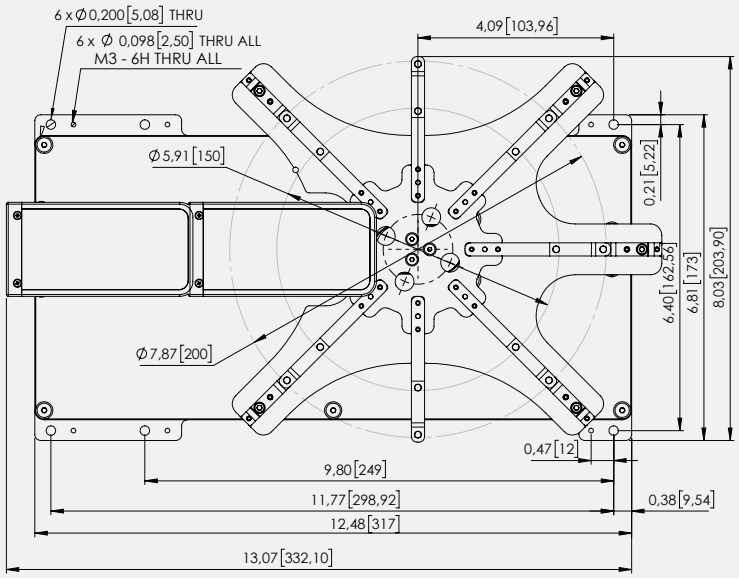

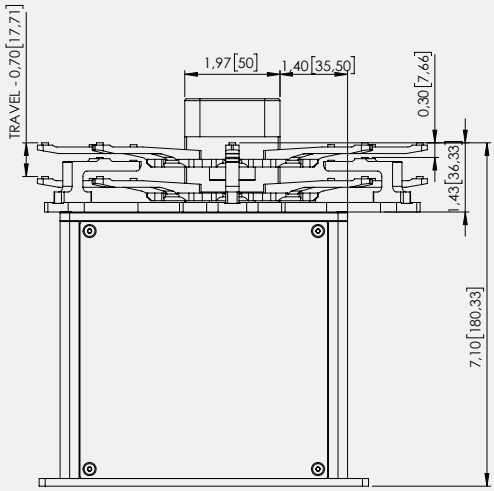

Unless otherwise specified all dimensions are in inch [mm]

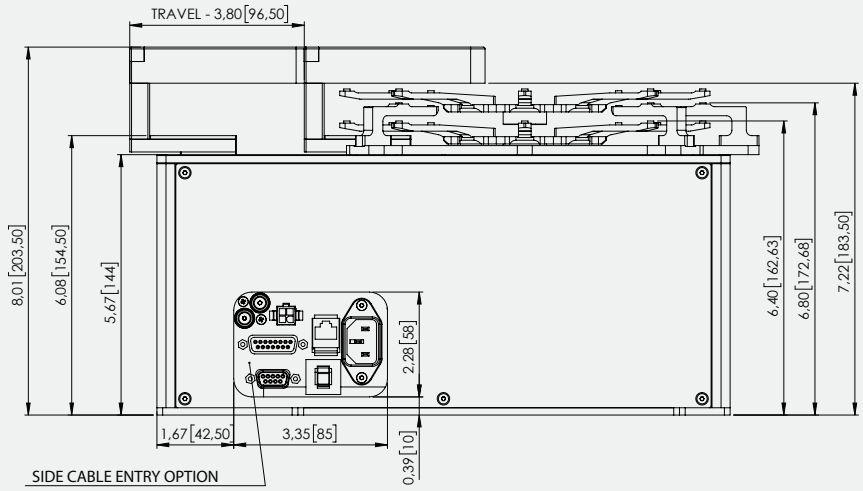

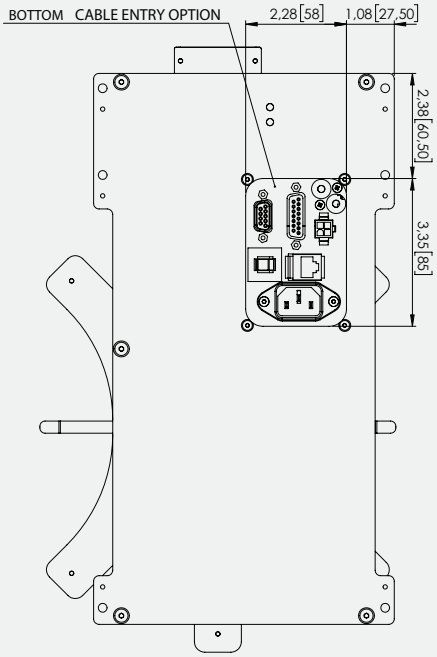

MILARA

LEADING THE WAY OF INNOVATION

PREALIGNER CONFRIGURATION MATRIX

MPA 1 1 1 3 2 2 1 1

Chuck Diameter
1 - 23mm
2 - 40mm
3 - Edge Handling
4 - Suction cups with raised light-house

Wafer Size
1 - 2"-8"
2 - 3"-12"
3 - 6", 8"
4 - 8", 12"

Example
CONFIGURATION
MPA 11132211

- 2-8″ wafers
- 23mm chuck
- PEEK chuck
- 20000 SPR
- Bottom connectors
- 4mm vacuum fitting
- no N_2 purge
- no display

Connectors
1 - Side
2 - Bottom

N_2 Purge
1 - None
2 - 3mm (OD)
3 - 4mm (OD)
4 - 1/4" (OD)

Chuck/Pins Material
1 - PEEK
2 - Suction cups
3 - Edge Handling
4 - Semitron ESD420

Chuck Precision
1 - 5000 SPR
2 - 10000 SPR
3 - 20000 SPR

**SPR = Sample Per Revolution*

Display
1 - No
2 - Yes

Vacuum Fitting
1 - 3mm (OD)
2 - 4mm (OD)
3 - 1/4" (OD)
4 - None

49 Maple Str., Milford, MA 01757, USA
+1.508.533.5322
sales@milarasmt.com
www.milarasmt.com