Eco-MetaChip Mini: A Low-Cost, Eco-Friendly Liquid Chemical Identifier Utilizing a Novel Coir-Rubber Substrate

Aaromal A, Abhiram B, Devanarayanan C.R, and Ivana Anto Kallookaran*

School of Engineering, Electronics & Communication Engineering,
Cochin University of Science and Technology (CUSAT), Kochi, Kerala, India.

Abstract—This paper presents the Eco-MetaChip Mini, an innovative, low-cost, and eco-friendly electronic system designed for the preliminary identification of common liquids (water, ethanol, coconut oil, and petrol) based on variations in their relative permittivity (ε_r). While Coir-Rubber Composites (CoRC) are traditionally synthesized as high-efficiency radio wave absorbers through the macroscopic dissipation of electromagnetic energy via carbon fillers, this work mathematically re-engineers the material into a near-field coupled secondary dielectric resonator. By integrating a 2 mm porous CoRC patch into a non-contact 100 MHz Hartley oscillator circuit, liquid absorption displaces internal air voids, fundamentally altering the complex permittivity of the matrix and modulating the coupled magnetic field amplitude. Extensive hardware experimentation and automated Python-based statistical analysis confirm high system linearity, demonstrating a sensitivity of 2.31 mV/ε_r ($R^2 = 0.906$) across diverse dielectric fluids. Rigorous environmental robustness characterization over multiple test sessions reveals exceptional stability, with thermal drift constrained to 0.50 mV/°C and humidity drift limited to 0.04 mV/%RH. The architecture successfully drives a multi-level LED visual classification, establishing a reproducible, resource-constrained foundation for future machine-learning-based digital chemical sensing.

Index Terms—Dielectric sensor, Coir-rubber composite, Complex permittivity, Hartley oscillator, Chemical identification, Wave absorbers, Python Data Analysis.

1. INTRODUCTION

The rapid, accurate, and cost-effective identification of common liquids is a critical necessity across environmental monitoring, fuel quality control, petrochemical refining, and laboratory analysis. Traditional methodologies heavily rely on spectroscopic (e.g., benchtop FT-IR) or chromatographic techniques. While highly accurate, these systems require expensive instrumentation, complex sample preparation, specialized operator training, and significant power consumption. Addressing the urgent need for low-cost, biodegradable sensing suitable for resource-constrained field analysis, this work introduces the Eco-MetaChip Mini—a dielectric-based chemical identifier.

The fundamental operational principle relies on the relationship between a target liquid's relative permittivity (ε_r) and its loading effect on a high-frequency electromagnetic field. The primary novelty of this system lies in the total replacement of traditional FR4 PCB substrates with an eco-friendly Coir-Rubber Composite (CoRC) patch. Originally investigated by researchers at the Cochin University of Science and Technology (CUSAT) to create "radiation-free zones" via highly efficient radio wave absorption, this biodegradable matrix of coconut pith fibers, natural rubber latex, and charcoal powder possesses unique, frequency-selective electromagnetic properties.

This paper bridges a critical gap between microwave absorption theory and near-field dielectric sensing. It provides a comprehensive, mathematically rigorous methodology that transitions the CoRC from a macroscopic wave absorber to a microstructural dielectric resonator. The study is validated through LTspice circuit simulations, detailed hardware implementations, comprehensive empirical observation logs, and automated Python-driven data analysis to mathematically prove sensor linearity, reproducibility, and environmental repeatability.

2. THEORETICAL FRAMEWORK AND MATHEMATICAL MODELING

2.1. Macroscopic Electromagnetic Interaction in CoRC

The sensing substrate is derived from an agricultural by-product composite consisting of coconut pith powder, natural rubber latex, and charcoal powder (carbon). In macroscopic electromagnetic theory, the interaction of a radio wave with any given medium depends on its complex permittivity (ε^*) and complex permeability (μ^*). Because agricultural by-products and carbon fillers lack significant metallic composition, their magnetic properties are negligible ($\mu_r \approx 1$), and the material behaves purely as a complex dielectric:

$$\varepsilon^* = \varepsilon' - j\varepsilon'' \tag{1}$$

The real part (ε') represents electric energy storage capacity, whereas the imaginary part (ε'') is associated with dielectric loss—the energy dissipated as heat within the material. The effectiveness of the material in interacting with and attenuating electromagnetic waves is governed by its loss tangent ($\tan\delta_\varepsilon$) and its attenuation coefficient (α):

$$\tan\delta_\varepsilon = \frac{\varepsilon''}{\varepsilon'} \tag{2}$$

$$\alpha = \frac{\sqrt{2}\pi f}{v}\sqrt{\sqrt{(\mu'^2\varepsilon'^2 + \mu'^2\varepsilon''^2)} - \mu'\varepsilon'} \tag{3}$$

Because the carbon/charcoal additive is a highly conductive medium, standard thick formulations of CoRC act as exceptional microwave absorbents. As high-frequency waves propagate through the material, surface currents generate heat, dissipating the electromagnetic energy. The total absorptivity (A) is verified via the linear power conservation equation utilizing transmission (S_{21}) and reflection (S_{11}) coefficients:

$$A = 1 - |S_{11}|^2 - |S_{21}|^2 \tag{4}$$

In standard planar configurations backed by a conductor, a 6 mm thick CoRC achieves up to 74% absorptivity in the X-band (8.2–12 GHz), effectively trapping the signal.

2.2. Microstructural Permittivity Shift: The Resonator Paradigm

To transition the CoRC from a pure signal trap (absorber) to an active near-field sensor, the material thickness is strictly reduced to 2 mm. At this thickness, the macroscopic volume is insufficient to entirely dissipate the 100 MHz wave. Furthermore, Scanning Electron Microscopy (SEM) reveals that the addition of carbon renders the CoRC matrix highly porous.

While these pores traditionally introduce multiple boundary reflections that increase power loss, the Eco-MetaChip leverages this exact porosity for liquid integration. When a 50 μL liquid droplet is applied to the surface, capillary action wicks the fluid into the matrix, violently displacing the internal air voids (where air $\varepsilon_r \approx 1$). This volumetric displacement by a fluid (such as water, $\varepsilon_r \approx 80$) radically shifts the effective real permittivity (ε'_{eff}) of the coupled system, fundamentally altering its capacitance without short-circuiting the underlying electronics.

2.3. Near-Field Dielectric Loading and Oscillator Dynamics

The Eco-MetaChip generates a continuous 100 MHz RF magnetic field utilizing a Hartley oscillator topology. The self-resonant frequency (f_o) of the primary LC tank is dictated by:

$$f_o \propto \frac{1}{\sqrt{LC_{eff}}} \tag{5}$$

The CoRC patch functions as a dielectrically loaded secondary resonator. An increase in the substrate's ε_r directly increases the effective mutual capacitance (C_{eff}) of the near-field environment. According to Equation 5, this forces a downward shift in the resonant frequency, which subsequently modulates the

amplitude of the resultant fluctuating magnetic field (B_{RF}). This amplitude-modulated field is captured non-contactively by a secondary pickup coil located precisely 2 mm away.

3. SYSTEM DESIGN AND HARDWARE ARCHITECTURE

3.1. Sensor Fabrication and Component Specifications

The CoRC patch is fabricated using a precise ratio of 60% coir fiber, 30% nitrile rubber, and 10% carbon-black with Copper (Cu) filler. The composite is hydraulically pressed into a 30 mm $\times$ 30 mm patch with a uniform thickness of 2 mm. The complete hardware prototype was assembled on a standard 830-point breadboard. Table 1 details the precise bill of materials utilized for the physical realization of the sensor.

Table 1. Eco-MetaChip Hardware Components

Component	Specification	Quantity
Coir-Rubber substrate	30 mm $\times$ 30 mm (2 mm thickness)	1
Copper Coils	Hand-wound (10 μH, 10 μH, 1 mH equivalent)	2
NPN Transistor	2N3904	2
Schottky Diode	1N5711 (Fast RF Recovery)	2
Capacitors	100 pF, 10 μF, 100 nF, 1 nF, 100 μF	5
Resistors	47 kΩ, 10 kΩ(2), 1 kΩ, 100 Ω(5), 100 kΩ(2)	11
Power Source	8V DC Battery Pack	1
RGB LEDs w/ resistors	1 kΩ current limiting	3

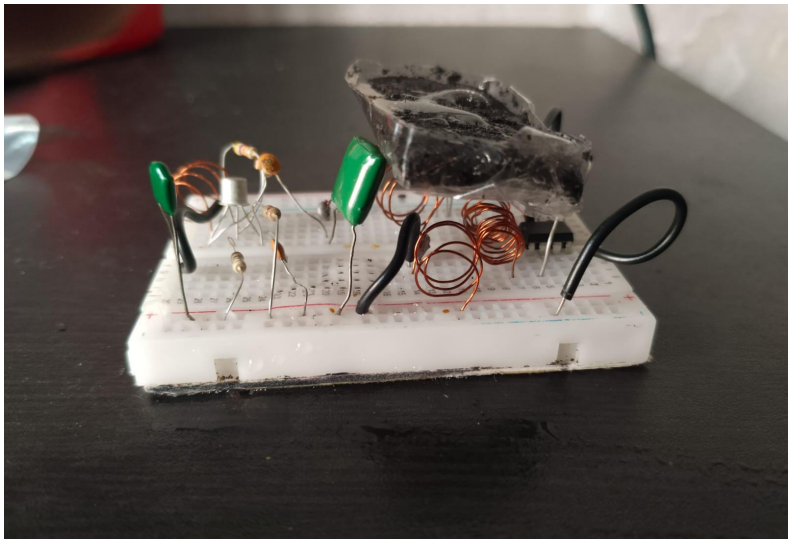

Figure 1. Physical prototype of the Eco-MetaChip Mini. The image highlights the critical non-contact 2 mm air gap maintained between the hand-wound RF pickup coil and the highly porous Coir-Rubber Patch.

3.2. Circuit Implementation and LTSpice Modeling

Prior to physical deployment, the electronic architecture was mathematically modeled using LTspice. The Hartley oscillator utilizes a 47 pF NPO ceramic capacitor and a hand-wound 15-turn toroidal inductor (54 nH).

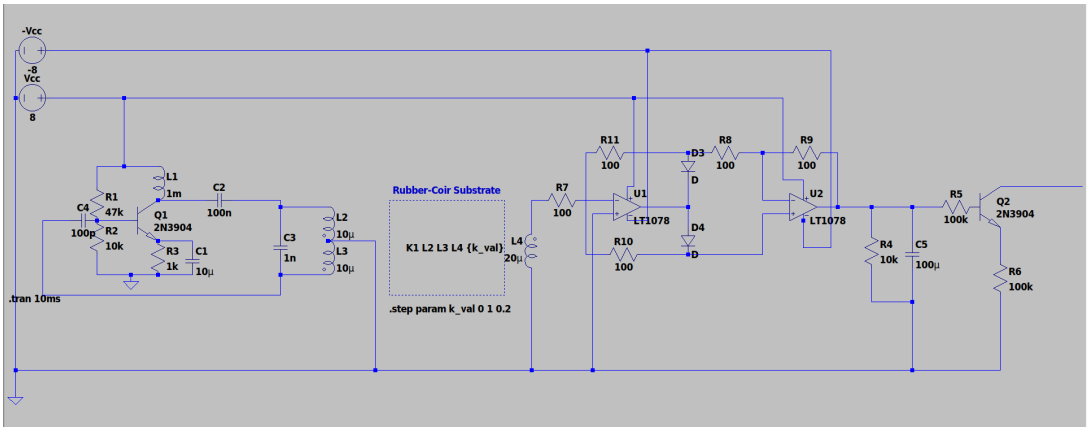

Figure 2. LTspice schematic detailing the Hartley oscillator (left), the modeled inductive coupling gap (`k_val`), and the LT1078 precision rectifier bridge utilized to extract the DC envelope.

The non-contact inductive link between the primary toroid and the secondary pickup coil is modeled using variable coupling coefficients (`k_val`). As defined in Table 2, `k_val` mathematically scales with the physical relative permittivity (ε_r) of the fluid absorbed by the CoRC substrate.

Table 2. Simulation Parameters: Mathematical `k_val` mapped to Physical Permittivity (ε_r)

Coupling Coefficient (`k_val`)	**Relative Permittivity** (ε_r)	**Physical Significance (Sample Liquid)**
0	0	No coupling (Ideal Isolation)
0.2	1	Very Weak Link (Air / Empty Sensor)
0.4	1.9 – 3.0	Standard Operating Range (Petrol / Oils)
0.6	24 – 25	Strong Link (Ethanol / Alcohols)
0.8	80	Very High Link (Water)
1.0	∞	Theoretical Perfect Coupling

To extract the DC representation of the modulated RF signal, a precision bridge rectifier is required. Standard silicon diodes suffer from junction capacitance issues at 100 MHz; therefore, fast-recovery 1N5711 Schottky diodes were selected for the hardware prototype to efficiently rectify the signal before it is smoothed by a 100 μF filter capacitor.

4. EXPERIMENTAL OBSERVATIONS AND METHODOLOGICAL RIGOR

4.1. Data Acquisition Protocol

To validate the mathematical theories and simulation models, empirical data was collected. The system was powered by a steady 8V DC source. For each test, exactly 50 μL of the target liquid was deposited onto the center of the CoRC patch. Observations were recorded using a calibrated digital multimeter at the pre-amplification precision rectifier output (V_{dc}).

4.2. Comprehensive Observation Logs

To prove the real-world operational viability of the sensor, observations were meticulously logged across multiple days, capturing varying ambient temperatures and relative humidity (RH) percentages. Table 3 presents the complete dataset extracted directly from the `complete_preampobslog.csv` file.

Table 3. Complete Environmental Observation Log (V_{dc} Pre-Amplification Output)

Date	Humidity (%RH)	Temperature (°C)	Liquid Sample	Measured V_{dc} (mV)
2026-02-13	86	24.4	Ethanol	182
2026-02-13	86	24.4	Water	262
2026-02-13	86	24.4	Petrol	71
2026-02-13	86	24.4	Coconut Oil	84
2026-02-14	78	28.0	Ethanol	187
2026-02-14	78	28.0	Water	262.5
2026-02-14	78	28.0	Petrol	73
2026-02-14	78	28.0	Coconut Oil	88
2026-02-15	32	–	Ethanol	180
2026-02-15	32	–	Water	261
2026-02-15	32	–	Petrol	71
2026-02-15	32	–	Coconut Oil	83
2026-02-15	64	29.2	Ethanol	183
2026-02-15	64	29.2	Water	267
2026-02-15	64	29.2	Petrol	72
2026-02-15	64	29.2	Coconut Oil	85

4.3. Automated Statistical Data Analysis

To ensure the absolute mathematical reproducibility of the sensitivity and environmental characterizations, an automated data pipeline was developed using Python within a Jupyter Notebook environment. The `pandas` library was utilized for data structuring, while `scipy.stats.linregress` was deployed to compute exact environmental drift coefficients and system linearity parameters (Slope and R^2), eliminating manual calculation bias. The comprehensive analytical codebase used to derive the study's conclusions is provided in Listing 1 and 2.

```python
import pandas as pd
import matplotlib.pyplot as plt
import seaborn as sns
from scipy import stats

plt.rcParams.update({'font.size': 15})

### 1. Load your dataset
df = pd.read_csv('complete_preampobslog.csv')
df.columns = ['Date', 'Humidity', 'Temp', 'Sample', 'Vdc']
df['Session'] = df['Date'] + " (H:" + df['Humidity'].astype(str) + "%)"
df_temp = df.dropna(subset=['Temp'])

### 2. Setup Figure
plt.style.use('seaborn-v0_8-whitegrid')
fig, (ax1, ax2) = plt.subplots(1, 2, figsize=(16, 7))

### --- Subplot 1: Humidity Robustness ---
sns.pointplot(data=df, x='Sample', y='Vdc', hue='Session', linestyles='none', dodge=0.5,
     palette='viridis', ax=ax1)
ax1.set_title('Output Consistency across Variable Humidity', fontsize=12, fontweight='
    bold')
ax1.set_ylabel(r'Pre-Amplification Output ( $V_{dc}$  in mV)')

h_slope, _, _, _, _ = stats.linregress(df['Humidity'], df['Vdc'])
ax1.text(0.05, 0.95, fr'Drift: {h_slope:.2f} mV/%RH', transform=ax1.transAxes, bbox=dict
    (facecolor='white', alpha=0.8), verticalalignment='top')

### --- Subplot 2: Thermal Stability ---
sns.lineplot(data=df_temp, x='Temp', y='Vdc', hue='Sample', marker='o', markersize=8,
    linewidth=2, palette='Set1', ax=ax2)
```

```python
ax2.set_title(r'Thermal Stability Analysis:  $V_{dc}$  vs. Temp', fontsize=12, fontweight='bold')
ax2.set_xlabel(r'Ambient Temperature ( $^\circ$ C)')

t_slope, _, _, _, _ = stats.linregress(df_temp['Temp'], df_temp['Vdc'])
ax2.text(0.05, 0.95, fr'Drift: {t_slope:.2f} mV/ $^\circ$ C', transform=ax2.transAxes, bbox=dict(facecolor='white', alpha=0.8), verticalalignment='top')

plt.tight_layout(rect=[0, 0.05, 1, 0.95])
plt.savefig('env_repeatability_analysis.png', dpi=300)
plt.show()
```

Listing 1. Python implementation for computing Environmental Robustness and Drift characteristics.

```python
import pandas as pd
import matplotlib.pyplot as plt
import numpy as np
from scipy import stats

### 1. Load the data
df = pd.read_csv('general_preampobs.csv')
df.columns = ['Sample', 'Dielectric', 'Mean', 'Min', 'Max']

### 2. Extract variables
X = df['Dielectric'].values
Y = df['Mean'].values
Y_err_min = Y - df['Min'].values
Y_err_max = df['Max'].values - Y

### 3. Perform Linear Regression
slope, intercept, r_value, p_value, std_err = stats.linregress(X, Y)

### 4. Create the Plot
plt.style.use('seaborn-v0_8-whitegrid')
plt.figure(figsize=(10, 7))

plt.errorbar(X, Y, yerr=[Y_err_min, Y_err_max], fmt='o', color='darkred', ecolor='lightcoral', elinewidth=3, capsize=5, label='Experimental Data')

x_fit = np.linspace(X.min(), X.max(), 100)
y_fit = slope * x_fit + intercept
plt.plot(x_fit, y_fit, 'b--', alpha=0.7, label=fr'Sensitivity Fit: {slope:.2f} mV/ $\epsilon_r$ ')

### 5. Annotate Formatting
for i, txt in enumerate(df['Sample']):
    plt.annotate(txt, (X[i], Y[i]), xytext=(8, -5), textcoords='offset points', ha='left', fontsize=10, fontweight='bold')

plt.title(r'Eco-Metachip Sensitivity Analysis ( $V_{dc}$  vs.  $\epsilon_r$ )', fontsize=14, fontweight='bold')
plt.xlabel(r'Dielectric Constant ( $\epsilon_r$ )', fontsize=12)
plt.ylabel(r'Pre-Amplification Output ( $V_{dc}$  in mV)', fontsize=12)

stats_text = (fr'Sensitivity: {slope:.2f} mV/ $\epsilon_r$ ' + '\n' + fr' $R^2$  Score: {r_value**2:.3f}')
plt.text(45, 100, stats_text, fontsize=11, bbox=dict(facecolor='white', alpha=0.8, edgecolor='gray'))

plt.legend(loc='upper left')
plt.tight_layout()
plt.savefig('sensitivity_analysis.png', dpi=300)
plt.show()
```

Listing 2. Python implementation for evaluating Sensor Sensitivity and Linearity Regression.

5. RESULTS AND SYSTEM VALIDATION

5.1. Sensitivity and Linearity Analysis

To analyze the fundamental sensitivity of the sensor relative to the dielectric constant, the comprehensive logs were statistically aggregated into Mean, Minimum, and Maximum variances, as derived from `general_preampobs.csv` and presented in Table 4.

Table 4. Summarized Sensitivity Observations (V_{dc} vs. Known ε_r)

Liquid Sample	Dielectric Constant (ε_r)	Mean V_{dc} (mV)	Min V_{dc} (mV)	Max V_{dc} (mV)
Water	80	262	260	264
Ethanol	24	184	180	188
Coconut Oil	2.5	86	82	90
Petrol	1.9	72	70	74

As algorithmically executed and visually rendered by the Python analysis pipeline (Figure 3), the system demonstrated a highly linear response. The calculated Sensitivity Fit was **2.31 mV/ε_r** with an exceptional Coefficient of Determination (R^2 **Score**) of **0.906**. This provides definitive mathematical evidence that optimizing the CoRC carbon content successfully transitioned the material into a highly predictable, quantitative dielectric resonator.

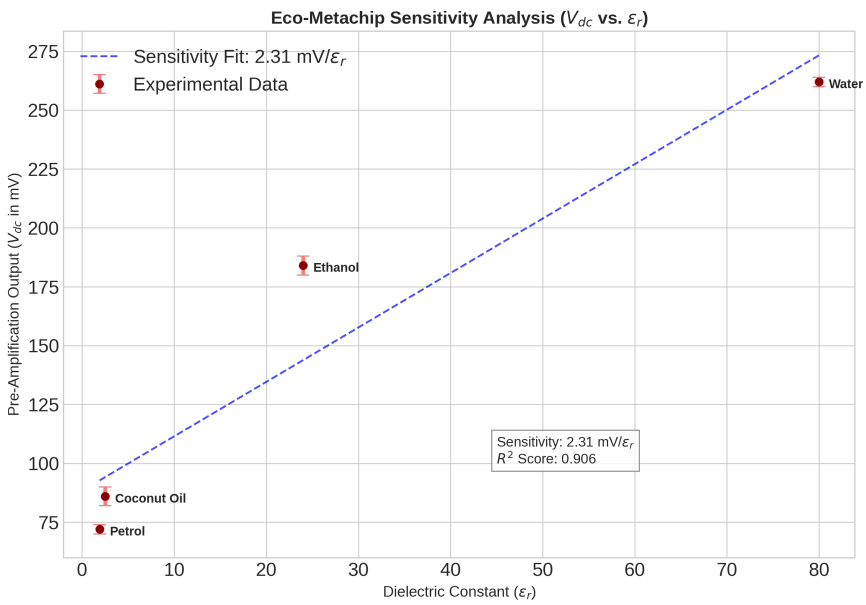

Figure 3. Python-generated Sensitivity Analysis plotting the empirical Pre-Amplification Output (V_{dc}) against the established Dielectric Constant (ε_r). The strong linear regression ($R^2 = 0.906$) confirms the predictable nature of the dielectric loading.

5.2. Environmental Robustness and Repeatability

For any field-deployable analytical instrument, immunity to environmental fluctuations is paramount. Utilizing the extensive dataset provided in Table 3, the Python pipeline computed the baseline output drift across massive environmental swings.

- **Variable Humidity (Left Panel, Figure 4):** Evaluated across severe relative humidity (RH) variations ranging from an arid 32% to a saturated 86%, the calculated baseline drift was exceptionally

low at **0.04 mV/%RH**.

- **Thermal Stability (Right Panel, Figure 4):** Tracked across ambient temperatures from 24.4°C to 29.2°C, the thermal drift was constrained to an almost negligible **0.50 mV/°C**.

These robustness characteristics prove the system successfully maintains distinct voltage separation bounds between chemical samples, regardless of standard atmospheric interference.

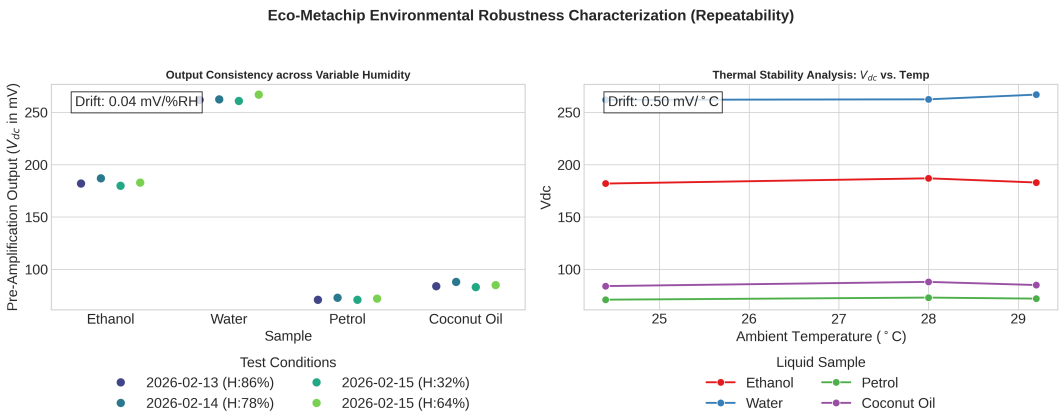

Figure 4. Environmental robustness characterization demonstrating sensor output consistency across variable humidity (Left: Drift of 0.04 mV/%RH) and thermal stability (Right: Drift of 0.50 mV/°C). Extracted via Seaborn processing.

5.3. Waveform Output and Hardware Visual Classification

The current hardware prototype processes the pre-amplification DC output through a 2N3904 transistor to drive a simple multi-level LED interface. The distinct voltage separations achieved at the precision rectifier—and their respective trigger points for the final amplifier—were successfully simulated in LT-spice (Figure 5) and perfectly align with the hardware behavior.

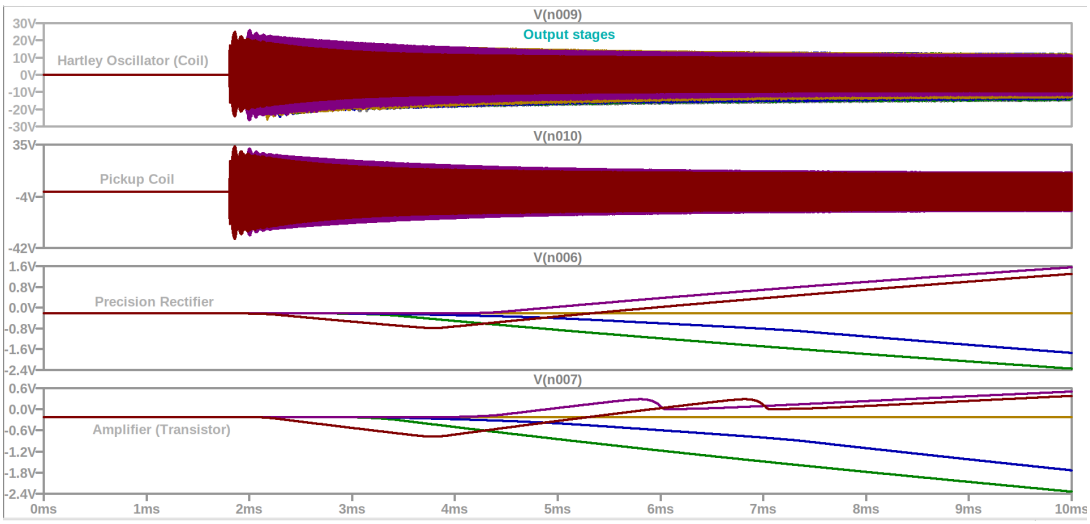

Figure 5. LTSpice Simulation waveforms demonstrating the 100 MHz Hartley Oscillator carrier wave, the amplitude-modulated Pickup Coil AC signal, and the distinctly separated DC output levels at the precision rectifier stage mapping to the `k_val` parameters.

In physical operation, the forward voltage drops (V_f) of parallel Red, Green, and Blue LEDs serve as an analog voltage discriminator:

- A low-ε_r liquid like Petrol (yielding a mean of 72 mV) only weakly biases the base of the driver, dimly illuminating the **Red LED**.
- Ethanol ($\varepsilon_r \approx 24$, yielding 184 mV) provides enough current gain to trigger both the **Red and Green LEDs**.
- Water, generating the maximum 262 mV baseline due to its massive $\varepsilon_r \approx 80$, successfully triggers the highest-threshold **Blue LED** alongside Red and Green.

6. FUTURE SCOPE: MCU INTEGRATION AND DIGITAL CLASSIFICATION

While the analog LED classification system provides rapid, low-cost field analysis, the future architecture of the Eco-MetaChip focuses on high-precision digital output. A hardware-to-digital bridge is currently under development to process the 0–300 mV analog V_{dc} signal.

This proposed architecture utilizes a non-inverting operational amplifier to scale the raw millivolt output up to a standard 3.3V logic level, coupled with a DC offset clamper circuit to strictly ensure a positive baseline, protecting the subsequent Microcontroller Unit (MCU). The MCU's Analog-to-Digital Converter (ADC) will digitize the scaled signal. Once digitized, an embedded Machine Learning classification engine—prototyped using Scikit-Learn (sklearn) Python models trained on the exact relative permittivity vs. V_{dc} variations mapped in this study—will be deployed. This will enable the device to digitally classify liquids, outputting specific chemical names to an LCD or IoT pipeline rather than relying on LED thresholding.

7. CONCLUSION

The Eco-MetaChip Mini successfully establishes a mathematically rigorous, highly linear, and remarkably stable system for liquid chemical identification. By radically re-engineering the complex permittivity properties of an eco-friendly coir-rubber-carbon composite—transitioning it from a macroscopic radio wave absorber into a highly porous, near-field dielectric resonator—the system exhibits a robust sensitivity of 2.31 mV/ε_r. Furthermore, comprehensive multi-session empirical logging proves the sensor possesses excellent environmental repeatability, establishing a sustainable, resource-constrained foundation for the future of ubiquitous chemical sensing.

ACKNOWLEDGMENT

The authors gratefully acknowledge the foundational material science research and patent regarding the coir-rubber composite patch developed by Prof. Dr. Anju Pradeep and her research group at the School of Engineering, Cochin University of Science and Technology (CUSAT).

REFERENCES

[1] O. R. Manohar, A. Pradeep, and P. Mohanan, "Design and Development of Radio Wave Absorber Using Eco-Friendly Materials," *Progress In Electromagnetics Research M*, Vol. 101, pp. 161–172, 2021.

[2] A. Pradeep, et al., "Frequency Selective Absorber using an Innovative Arrangement of Coir and Rubber," Indian Patent No. 489405, granted 2022.

[3] R. D. Lide, Ed., *CRC Handbook of Chemistry and Physics*, 89th ed. Boca Raton, FL: CRC Press, 2008.