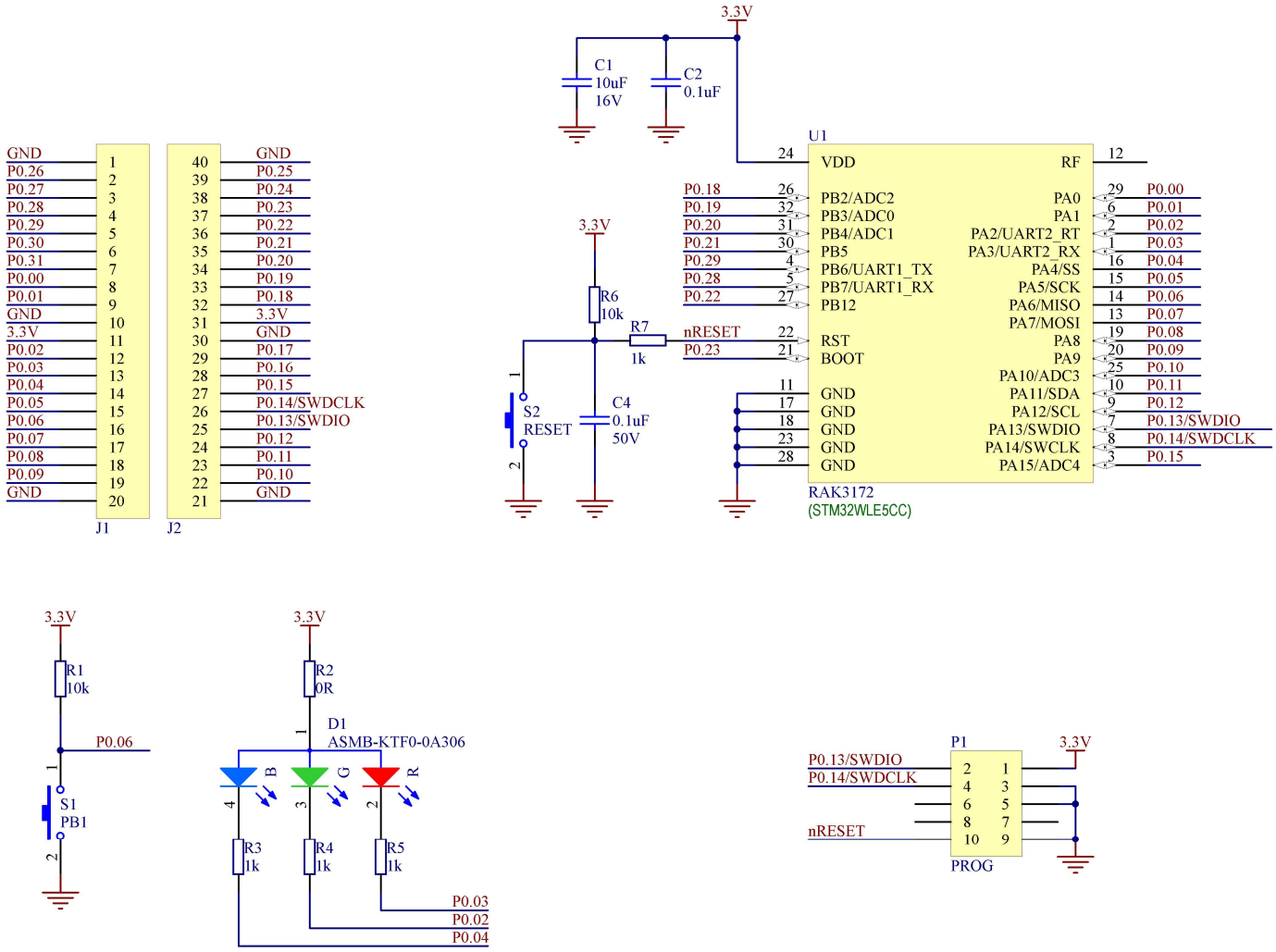

Lemon IoT

Title	*Lemon IoT - LoRaWAN*
Revision: 1.0	Sheet 1 of 1
Date: 5/02/2023	Time: 7:13:47 PM
File: lemonIot_lora.SchDoc	

AARON MOHTAR & CO
BRINGING YOUR IDEAS TO LIFE