CyberBOT

OFFICIAL FIELD MANUAL

The Architect's Complete Operational Handbook

SGCTF NETWORK COMMAND

Dossier Profile System · Automated Scheduling · Anti-Deletion Watchdog
Recursive Refunds · Live Leaderboard · Easter Egg Protocol

March 24, 2026

Deployment-Ready Distribution

Contents

1 System Introduction **3**
1.1 What is New in CyberBOT . . . 3
1.2 System Architecture . . . 4

2 Hardware & Deployment **5**
2.1 System Requirements . . . 5
2.2 Installation . . . 5
2.3 Environment Configuration . . . 6
2.4 File Structure . . . 6
2.5 Troubleshooting . . . 7

3 Database Schema **8**

4 Administrative Setup **9**
4.1 Initial Configuration . . . 9
4.2 Rank Role System . . . 9
4.3 Championship Belt Logic . . . 10

5 Mission Management **11**
5.1 Challenge Lifecycle . . . 11
5.2 Creating a Challenge . . . 11
5.3 Posting a Challenge . . . 12
5.4 Scheduled Posting Engine . . . 12
5.5 Deleting a Challenge . . . 13

6 Anti-Deletion Watchdog **14**

7 Scoring & Economics **15**
7.1 Base Points & First Blood Bonuses . . . 15
7.2 Millisecond Tie-Breaking . . . 15
7.3 Hint Economy . . . 15
7.4 Collusion Detection . . . 15
7.5 Flag Submission Pipeline . . . 16

8 The Dossier Profile System **17**
8.1 Profile Card Anatomy . . . 17
8.2 Profile States . . . 18
8.2.1 Initial State — RECRUIT (0 Points) . . . 18
8.2.2 Mid-Progression State . . . 18

8.2.3 Max Clearance State 19
8.3 Rank Themes 19
8.4 Specialization Tags 20
8.5 The Architect Easter Egg 20

9 Player Commands **21**
9.1 /profile 21
9.2 /leaderboard 21
9.3 /help 21
9.4 /about 21

10 Administration Reference **22**
10.1 Mission Control 22
10.2 Player Management 22
10.3 System & Maintenance 22

11 Database Backup & Recovery **24**
11.1 Export 24
11.2 Live Import 24
11.3 Recommended Backup Schedule 24

Chapter 1

System Introduction

CyberBOT is a fully asynchronous Capture The Flag engine for Discord, rebuilt with a dossier-style intelligence profile system, automated role progression, a competitive hint economy, and a complete administrative suite. It is designed to run an entire CTF season with zero manual intervention once configured.

1.1 What is New in CyberBOT

- **Dossier Profile Cards:** Completely redesigned 1800×700 Agent ID cards with dark charcoal folder aesthetics, neon HUD borders, CLASSIFIED watermark, and dynamic clearance progression bars.
- **Specialization Tags:** HUD boxes showing the categories of the last 3 challenges solved.
- **Clearance Progression:** A progress bar showing advancement toward the next rank role.
- **Max Clearance State:** When the highest rank role is achieved the progress bar is replaced with a MAX CLEARANCE LEVEL ATTAINED banner.
- **The Architect Easter Egg:** Running `/profile` on the bot itself reveals a unique **[ROOT]** profile with SYSTEM CORE badge, infinity score, and the ARCHITECT OF THE SIMULATION signature.
- **Dropdown Categories:** Challenge categories are enforced via slash command dropdowns, ensuring clean specialization tag rendering.
- **Belt Steal Announcements:** When the #1 ranking changes, the bot broadcasts a live alert to the General channel.

1.2 System Architecture

Diagram 1.1 — Top-Level Architecture

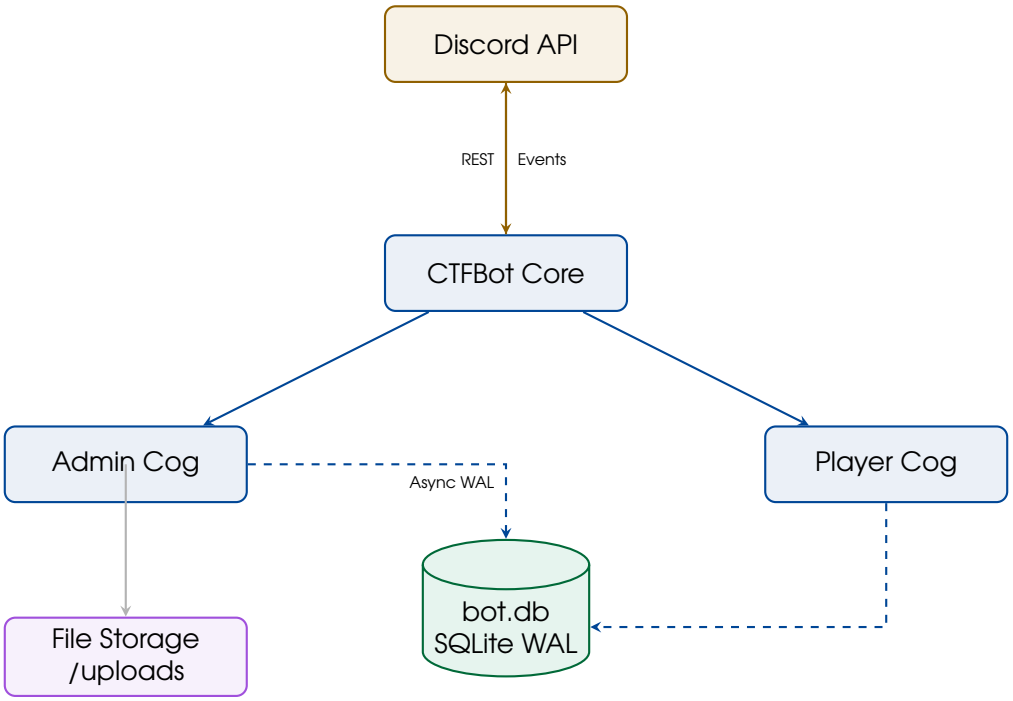

Chapter 2

Hardware & Deployment

2.1 System Requirements

- **Python 3.10+** — Required for modern `asyncio` features.
- **Discord Bot Token** — From the Discord Developer Portal.
- **Gateway Intents** — Only **Server Members Intent** must be enabled in the Developer Portal. Message Content Intent is enabled as a prefix fallback. Presence Intent is not required.
- **Bot Permissions** — Send Messages, Embed Links, Attach Files, Manage Roles, Read Message History.
- **font.ttf** — Must be present in the root directory for profile card rendering.

2.2 Installation

```
cd cyberBOT
python3 -m venv venv
source venv/bin/activate
pip install -r requirements.txt
cp .env.example .env
nano .env           # Fill in DISCORD_TOKEN and GUILD_ID
python3 main.py
```

Listing 2.1: Standard Deployment (Linux / Kali)

```
cd cyberBOT
python3 -m venv venv
.\venv\Scripts\Activate.ps1
pip install -r requirements.txt
cp .env.example .env
nano .env           # Fill in DISCORD_TOKEN and GUILD_ID
python3 main.py
```

Listing 2.2: Standard Deployment (Windows)

```
pkg update && pkg upgrade
pkg install python python-pip
cd cyberBOT
pip install -r requirements.txt
cp .env.example .env
nano .env
python main.py
```

Listing 2.3: Termux (Android) Deployment

2.3 Environment Configuration

```
DISCORD_TOKEN=your_bot_token_here
GUILD_ID=your_server_id_here
```

NOTE

GUILD_ID enables Instant Guild Sync, making all slash commands available immediately. Without it, Discord's global propagation can take up to 60 minutes. The bot gracefully falls back to global sync if the value is invalid, logging a console warning rather than crashing.

2.4 File Structure

```
cyberBOT/
+-- cogs/
|   +-- admin.py        # Mission control + background watchdogs
|   +-- player.py       # Agent interface + profile rendering
+-- uploads/            # Scheduled challenge files (auto-created)
+-- main.py             # Engine core, DB init, shared BONUSES constant
+-- bot.db              # SQLite database (auto-created, gitignored)
+-- font.ttf            # Font for profile card generation
+-- requirements.txt    # discord.py, python-dotenv, pillow, aiosqlite
+-- .env                # Secrets (gitignored)
```

2.5 Troubleshooting

Issue	Resolution
429 Rate Limit on startup	Normal after repeated restarts. Wait 15 seconds.
Missing profile card	Ensure `font.ttf` exists in the root directory.
Commands not appearing	Verify `GUILD_ID` is a plain integer with no quotes.
DB write error	Check that the process has write permission to the project directory.

Chapter 3

Database Schema

CyberBOT uses a single `bot.db` SQLite file with WAL mode for concurrent read-/write access. All tables are created automatically on first launch. A migration system upgrades existing databases without data loss.

Table	Primary Key	Purpose
`flags`	challenge_id TEXT	All challenge data: flag, points, category, post metadata, scheduling, file path, image URL.
`scores`	user_id INTEGER	Running point total and display name per player.
`solves`	(user_id, challenge_id)	Solve records with REAL timestamps for millisecond tie-breaking.
`hints`	id AUTOINCREMENT	Purchasable hints attached to challenges with a point cost.
`unlocked_hints`	(user_id, hint_id)	Which players have unlocked which hints.
`role_rewards`	role_id INTEGER	Discord role IDs mapped to point thresholds.
`banlist`	user_id INTEGER	Disqualified players blocked from submissions.
`config`	key TEXT	Server settings: channel IDs, leaderboard message ID, champion role.

Chapter 4

Administrative Setup

All administrator commands require Discord **Administrator** permission and respond ephemerally (visible only to the invoker).

4.1 Initial Configuration

1. Run `/setup` to link channels: Leaderboard, Challenge Logs, Wrong Submissions, and General.
2. Run `/set_rank_role` to define point milestones (e.g. 500 pts = Senior Agent, 2000 pts = Elite Operative).
3. Create challenges via `/create` using the official dropdown category list.
4. Post or schedule them using `/post`.

4.2 Rank Role System

Diagram 4.1 — Dynamic Promotion Flow

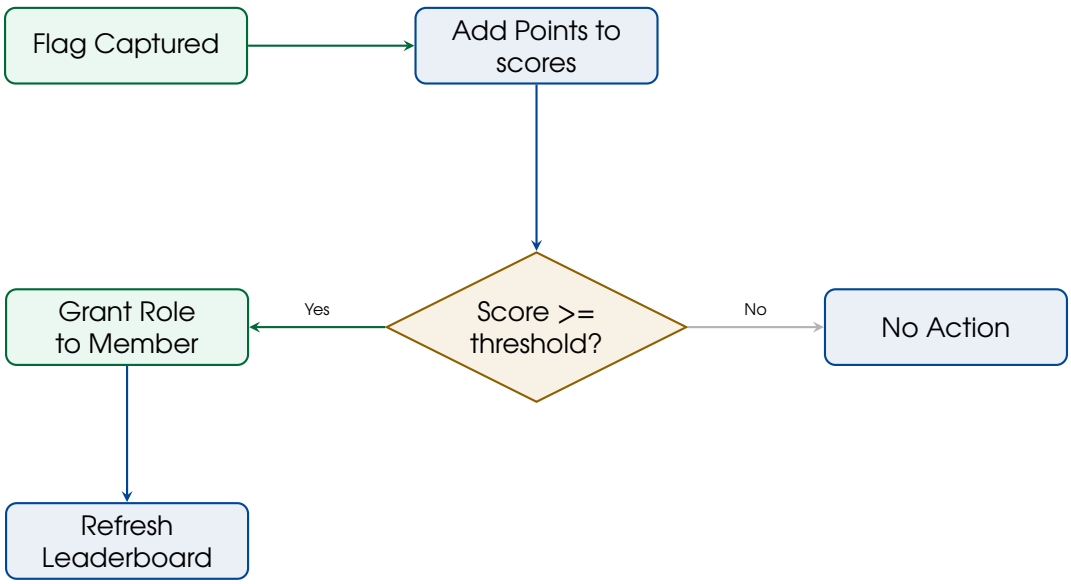

4.3 Championship Belt Logic

CyberBOT monitors standings every 2 minutes. When the #1 player changes:

1. The Champion role is stripped from the previous holder.
2. The Champion role is granted to the new leader.
3. An automated Belt Stolen alert is broadcast to the configured General channel.

Chapter 5

Mission Management

5.1 Challenge Lifecycle

Diagram 5.1 — Mission Lifecycle

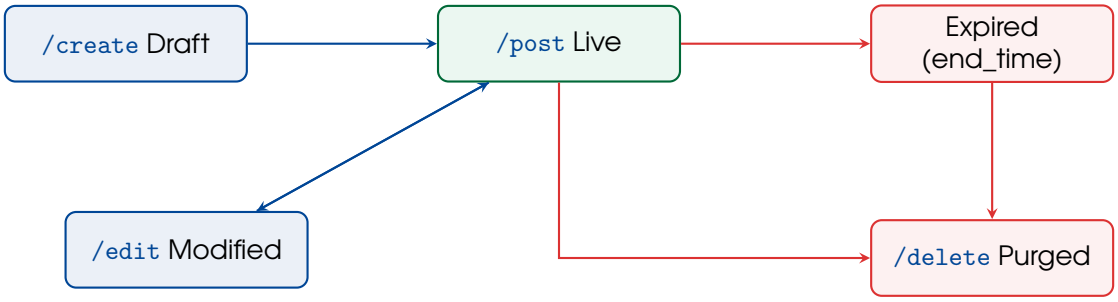

5.2 Creating a Challenge

`/create` registers a new challenge in draft mode. Not visible to players until posted.

Parameter	Required	Description
`challenge_id`	Yes	Unique identifier, e.g. `web1`, `crypto3`.
`points`	Yes	Base point value awarded on solve.
`flag`	Yes	Correct answer string (case-sensitive).
`category`	Yes	Selected from official dropdown (WEB, CRYPTO, PWN, etc.).
`image_url`	No	URL to image embedded in the challenge card.

5.3 Posting a Challenge

Parameter	Required	Description
`challenge_id`	Yes	ID of an existing draft challenge.
`start_time`	Yes	`DD/MM HH:MM`. Past time = post immediately.
`end_time`	Yes	Expiry time, `DD/MM HH:MM`.
`channel`	No	Target channel (defaults to current).
`description`	No	Objective text on the mission card.
`connection_info`	No	Server/URL block on the mission card.
`file`	No	Attachment to accompany the post.

5.4 Scheduled Posting Engine

Diagram 5.2 — Scheduler Logic

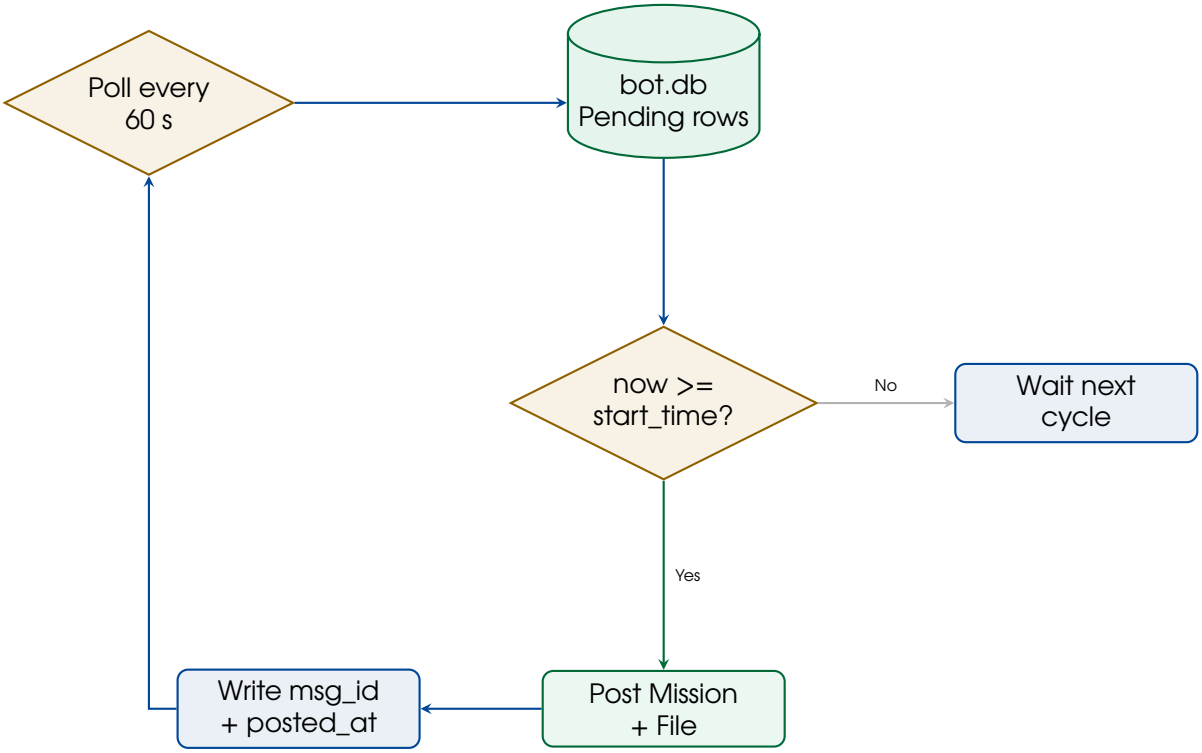

5.5 Deleting a Challenge

`/delete` purges a challenge and handles all downstream consequences:

Diagram 5.3 — Recursive Delete & Refund Flow

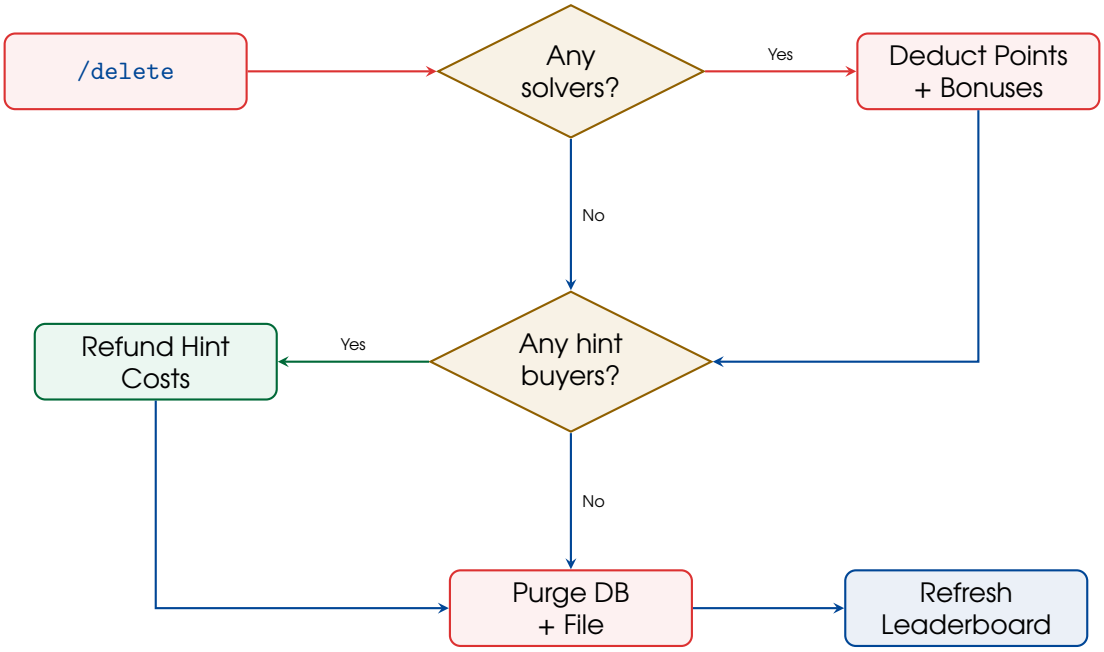

Chapter 6

Anti-Deletion Watchdog

A background task polls every 60 seconds. For every active posted challenge, it verifies that both the mission embed and its file attachment message still exist. If either is missing, full recovery is triggered automatically.

Diagram 6.1 — Watchdog Heartbeat Cycle

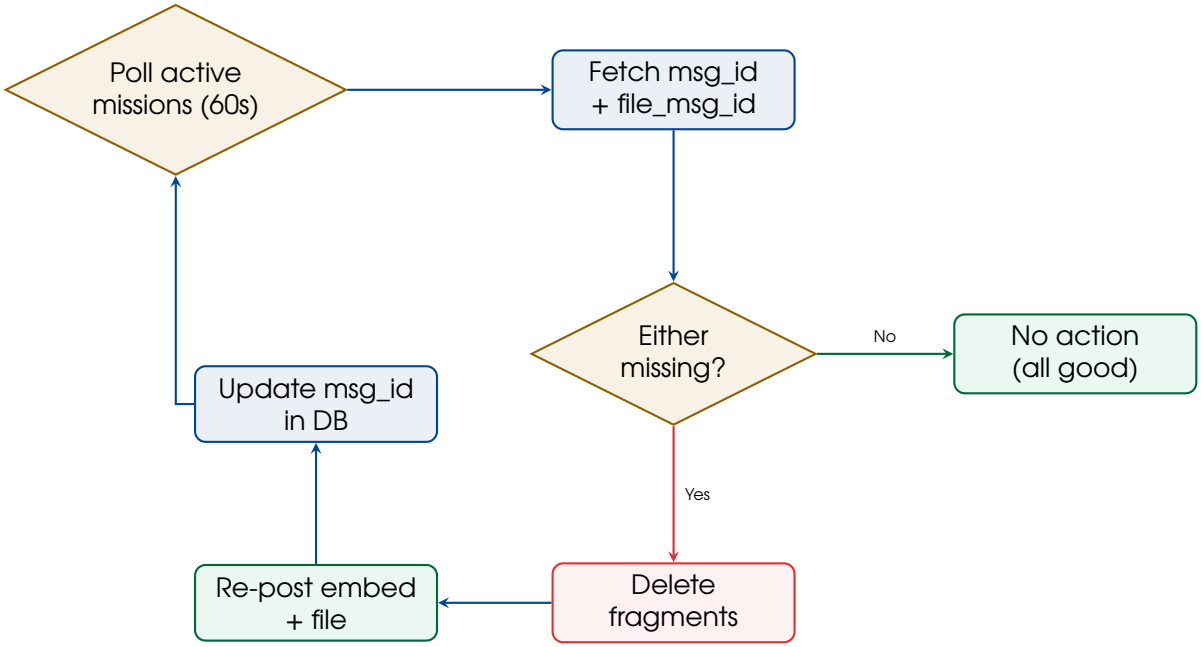

The watchdog also handles expiry: when `end_time` is reached the embed is updated to show **[Expired]**, the Submit button is disabled, and the local file is deleted from storage.

Chapter 7

Scoring & Economics

7.1 Base Points & First Blood Bonuses

Position	Title	Bonus	Example (100 pt base)
1st	First Blood	+50 pts	**150 pts**
2nd	Silver	+25 pts	**125 pts**
3rd	Bronze	+10 pts	**110 pts**
4th+	—	+0 pts	**100 pts**

7.2 Millisecond Tie-Breaking

Timestamps are stored as `REAL` (Python `float`), giving sub-millisecond precision. When two players share the same point total, the one who reached that total *first* ranks higher. The leaderboard SQL sorts by `points DESC, last_solve_timestamp ASC`.

7.3 Hint Economy

- Hints are purchased with points via a dropdown selector on the mission card.
- Once purchased, a hint is permanently unlocked for that player at no further cost.
- `/remove_hint` triggers automatic refunds to all buyers.
- `/delete` refunds all hint costs before purging the challenge.

7.4 Collusion Detection

If the same flag is solved by two different players within 60 seconds of each other, a collusion alert is logged to the Challenge Logs channel with both usernames and the exact time delta. The solve is still recorded; the alert is for admin review.

7.5 Flag Submission Pipeline

Diagram 7.1 — Submission Pipeline

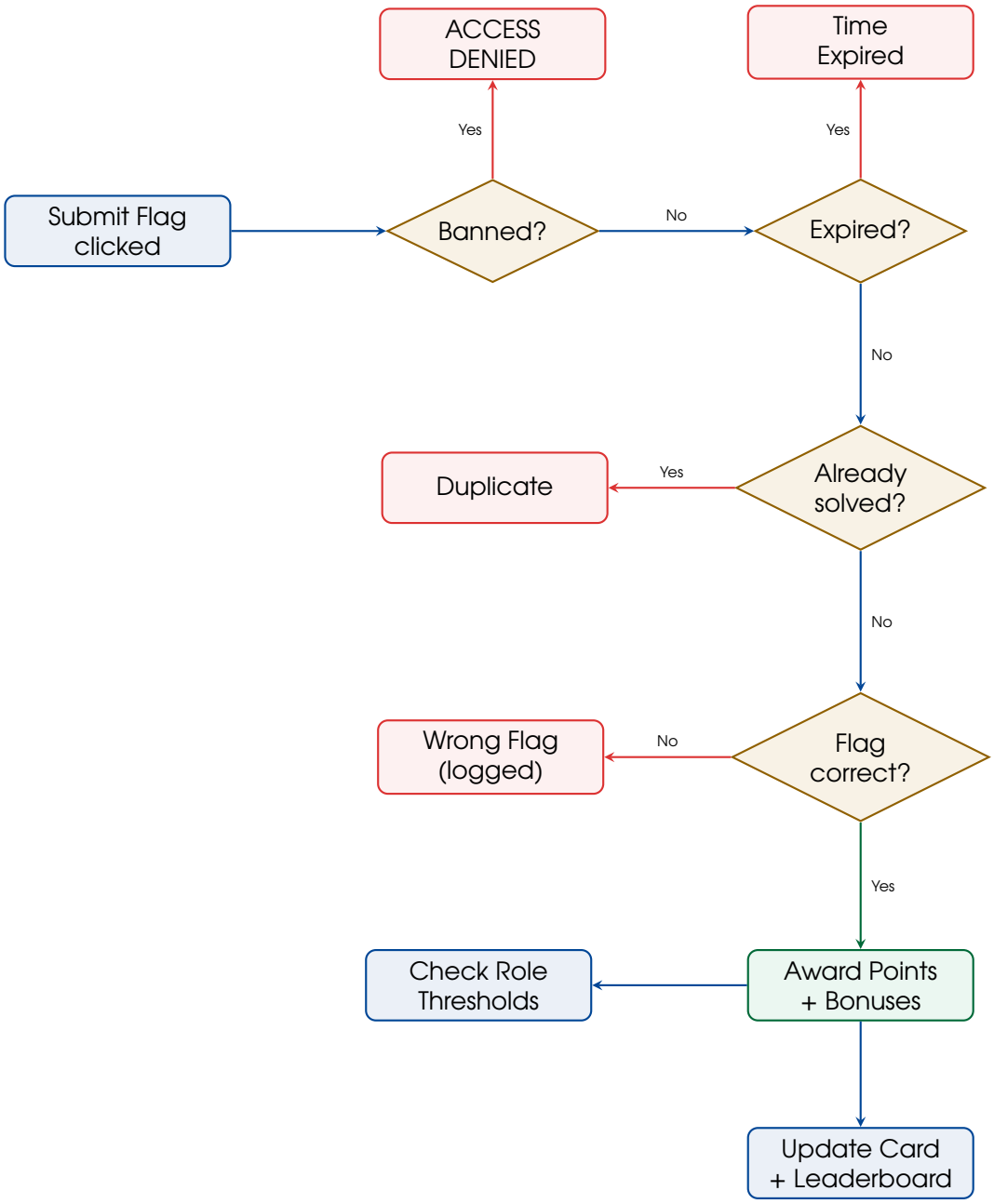

Chapter 8

The Dossier Profile System

Each Agent profile is a procedurally rendered **1800x700** digital dossier card generated via the Python Imaging Library (PIL). The theme, border colour, badge text, and bottom bar all adapt dynamically based on rank and progress.

8.1 Profile Card Anatomy

Every card shares a dark charcoal grid background with a diagonal **CLASSIFIED** watermark.

Zone	Content
Top-left strip	ID_REF (Discord user ID) and STATUS: ACTIVE_OPERATIVE
Left panel	Circular avatar with rank-coloured neon ring border
Centre-top	Agent name (uppercase) and clearance badge with diamond icon
Top-right HUD	Specialization tags: last 3 solve categories, each uniquely coloured
Stat boxes	Three clipped-corner boxes: RANK, SCORE, FLAGS
Bottom bar	Rank title box (left) and clearance progress bar or max level banner

8.2 Profile States

8.2.1 Initial State — RECRUIT (0 Points)

A new agent with no solves. The card renders in neutral grey. No specialization tags are shown. The progress bar reads 0% toward the first milestone.

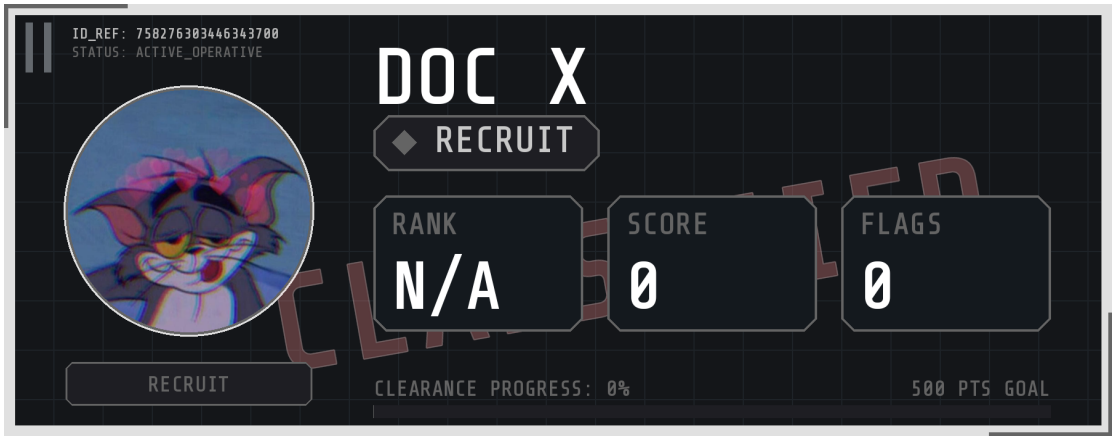

Figure 8.1: Initial profile state — RECRUIT with no points or flags.

8.2.2 Mid-Progression State

An agent accumulating points. The progress bar fills proportionally. Specialization tags appear as categories are solved. Border and badge colour reflect current clearance level.

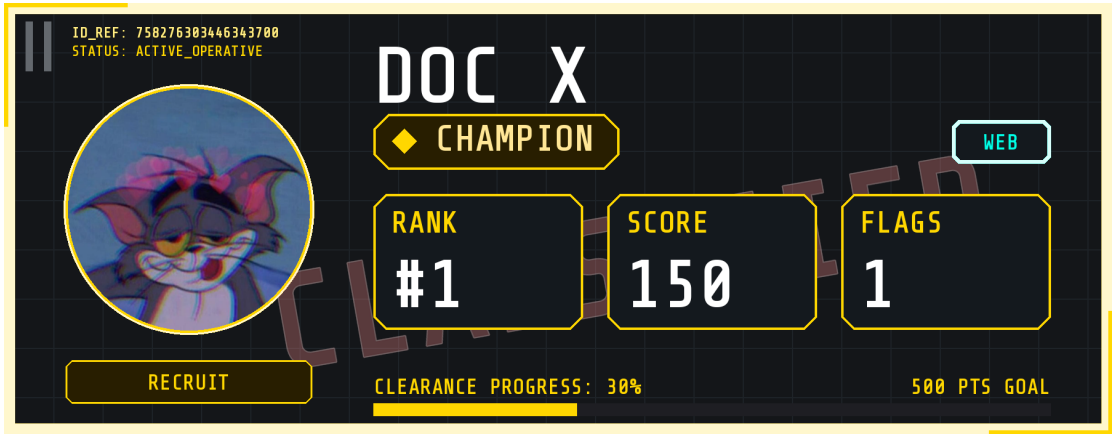

Figure 8.2: Mid-progression — CHAMPION at 30% toward the next milestone.

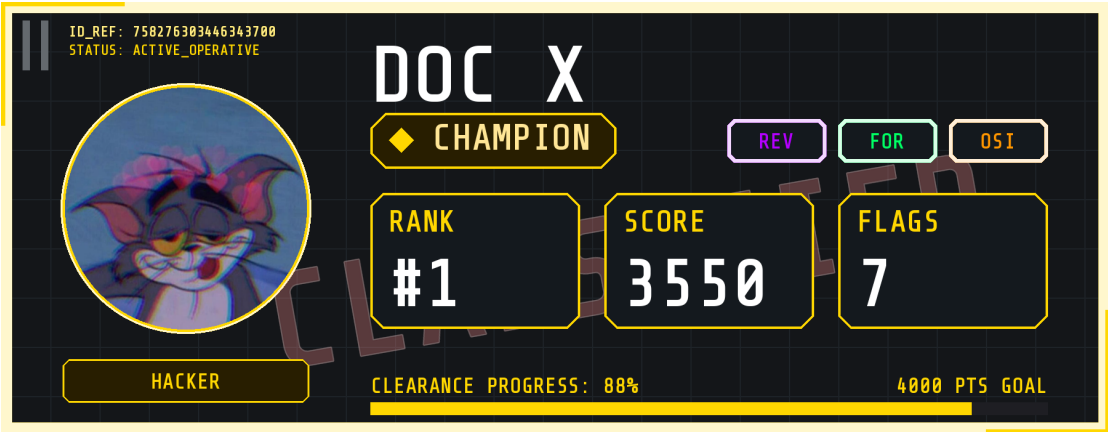

Figure 8.3: Advanced progression — CHAMPION at 88% with 3 specialization tags.

8.2.3 Max Clearance State

When the highest configured rank role is achieved, the progress bar is replaced with the **MAX CLEARANCE LEVEL ATTAINED** banner.

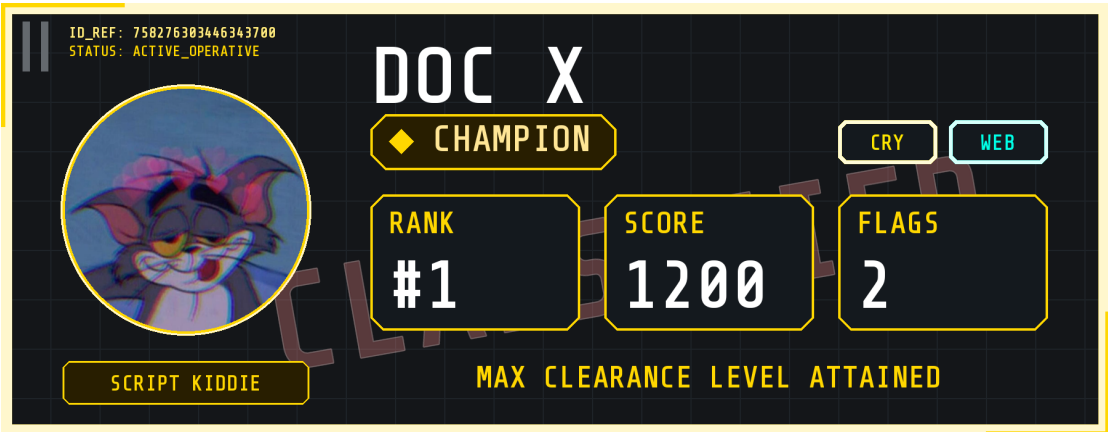

Figure 8.4: Max clearance state — all rank milestones achieved.

8.3 Rank Themes

Condition	Badge	Accent	Notes
#1 on leaderboard	CHAMPION	Gold	Full gold borders, ring, progress bar
#2	VANGUARD	Platinum	Silver-white accents
#3	CHALLENGER	Bronze	Bronze accents
#4–#10	SENTINEL	Crimson	Red-alert theme
Other ranked players	OPERATIVE	Teal	Standard operative
0 points	RECRUIT	Gray	Neutral, no progress colour

8.4 Specialization Tags

Category	Tag	Colour
Web Exploitation	WEB	Cyan
Cryptography	CRY	Yellow
Pwn / Binary Exp.	PWN	Red
Reverse Eng.	REV	Purple
Forensics	FOR	Green
OSINT	OSI	Orange
Miscellaneous	MIS	White

8.5 The Architect Easter Egg

Running `/profile @CyberBOT` reveals the hidden Overseer profile. Instead of player stats the card renders a special **SYSTEM CORE** configuration with a deep navy and cyber-emerald theme.

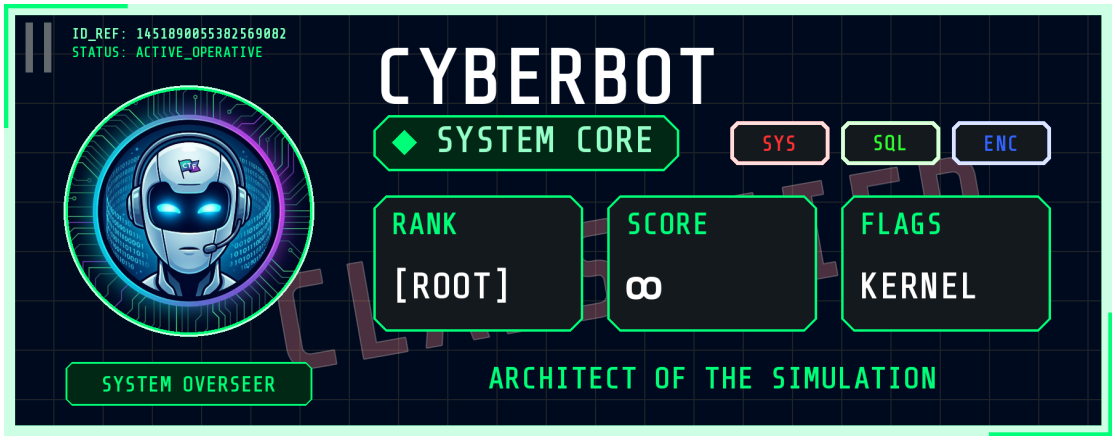

Figure 8.5: The Architect Easter Egg — triggered by running `/profile` on the bot.

Field	Value
Name badge	SYSTEM CORE
Rank	[ROOT]
Score	∞
Flags	KERNEL
Bottom text	ARCHITECT OF THE SIMULATION
Role tag	SYSTEM OVERSEER
Spec tags	SYS, SQL, ENC

Chapter 9

Player Commands

9.1 /profile

Renders and sends the Agent dossier card as a PNG. Optionally accepts a *member* mention to view another player's card.

NOTE

`/profile` is subject to a **30-second cooldown** for regular players to prevent thread-pool flooding from repeated PIL renders. Administrators are exempt.

9.2 /leaderboard

Interactive paginated embed (10 players per page) with Previous/Next navigation. Sorted by points descending with timestamp tie-breaking. A **live leaderboard message** is also maintained in the configured channel, auto-refreshing every 2 minutes and on every score change.

NOTE

`/leaderboard` and `/help` each have a **30-second per-user cooldown**. Administrators bypass all cooldowns. Cooldown state is stored in memory and auto-pruned so there is no persistent overhead.

9.3 /help

Complete command reference. Administrators see the full suite including mission control and maintenance commands. Players see agent-facing commands only. Ephemeral.

9.4 /about

Displays comprehensive system specifications and development credits for the Lead Architect and System Engineer. Features a live Satellite Uplink diagnostic showing real-time network latency and encryption protocols. This command is delivered ephemerally to maintain operational security.

Chapter 10

Administration Reference

10.1 Mission Control

`/create` `challenge_id points flag category` [`image_url`] Register a challenge in draft mode.

`/post` `challenge_id start_time end_time` [`channel description connection_info file`] Deploy or schedule. Time format: `DD/MM HH:MM`.

`/edit` `challenge_id` [`new_id points flag category image_url description connection_info`] Modify any attribute. Live embed syncs immediately. Renaming cascades to all records.

`/delete` `challenge_id` Purge with recursive point deduction and hint refund.

`/list` Show all challenges with Posted/Draft status.

`/show` `challenge_id` Reveal hidden flag text and metadata.

`/add_hint` `challenge_id text cost` Attach a purchasable hint. Hint button appears on live embed automatically.

`/remove_hint` `hint_id` Remove hint with automatic refunds to all buyers.

10.2 Player Management

`/revoke` `member challenge_id` Remove a solve. Deducts base points plus any first-blood bonus earned at that solve position.

`/ban_user` `member` Block all flag submissions and hint purchases.

`/unban_user` `member` Restore full access.

10.3 System & Maintenance

`/setup` [`leaderboard_channel challenge_logs wrong_submissions general_channel champion_`] Link channels and set champion role. Non-destructive and additive.

`/set_rank_role` `role points` Define an auto-promotion milestone.

`/remove_rank_role role` Remove a milestone from the promotion engine.

`/list_rank_roles` Display all configured thresholds.

`/export` Upload `bot.db` as an ephemeral Discord attachment for backup.

`/import file` Live-swap the active database. Zero downtime.

`/reset_config` Wipe channel and role config only. Player data preserved.

CRITICAL WARNING

`/wipe_all` opens a **popup dialog** (Discord Modal) immediately. The administrator must type `CONFIRM WIPE` exactly in the text field and click Submit to proceed. Closing the dialog or typing any other phrase aborts the operation with no data loss. This is an irreversible action — always run `/export` first.

Chapter 11

Database Backup & Recovery

11.1 Export

Run `/export` at any time. The bot sends `bot.db` as a private Discord file attachment visible only to the invoking administrator.

11.2 Live Import

Diagram 10.1 — Live Database Swap

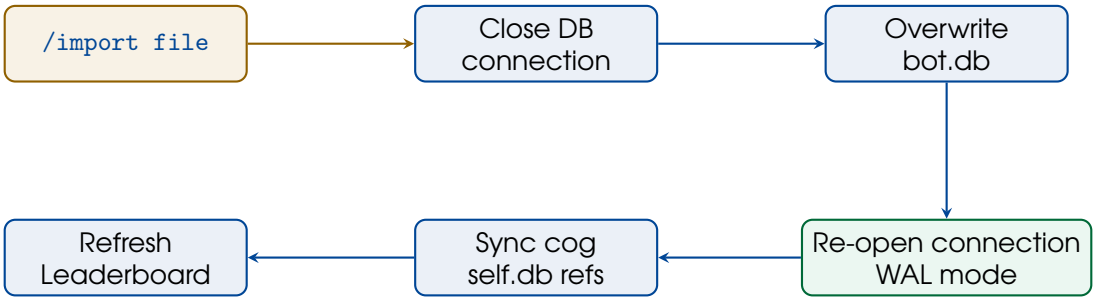

CRITICAL WARNING

Import overwrites the current database without automatic backup. Always run `/export` before importing.

11.3 Recommended Backup Schedule

- **Before each weekly event** — Pre-event snapshot.
- **After each event ends** — Final standings preserved.
- **Before** `/wipe_all` — End-of-season archive.

— END OF FIELD MANUAL —

CyberBOT · SGCTF Network Command · March 24, 2026

ARCHITECT OF THE SIMULATION