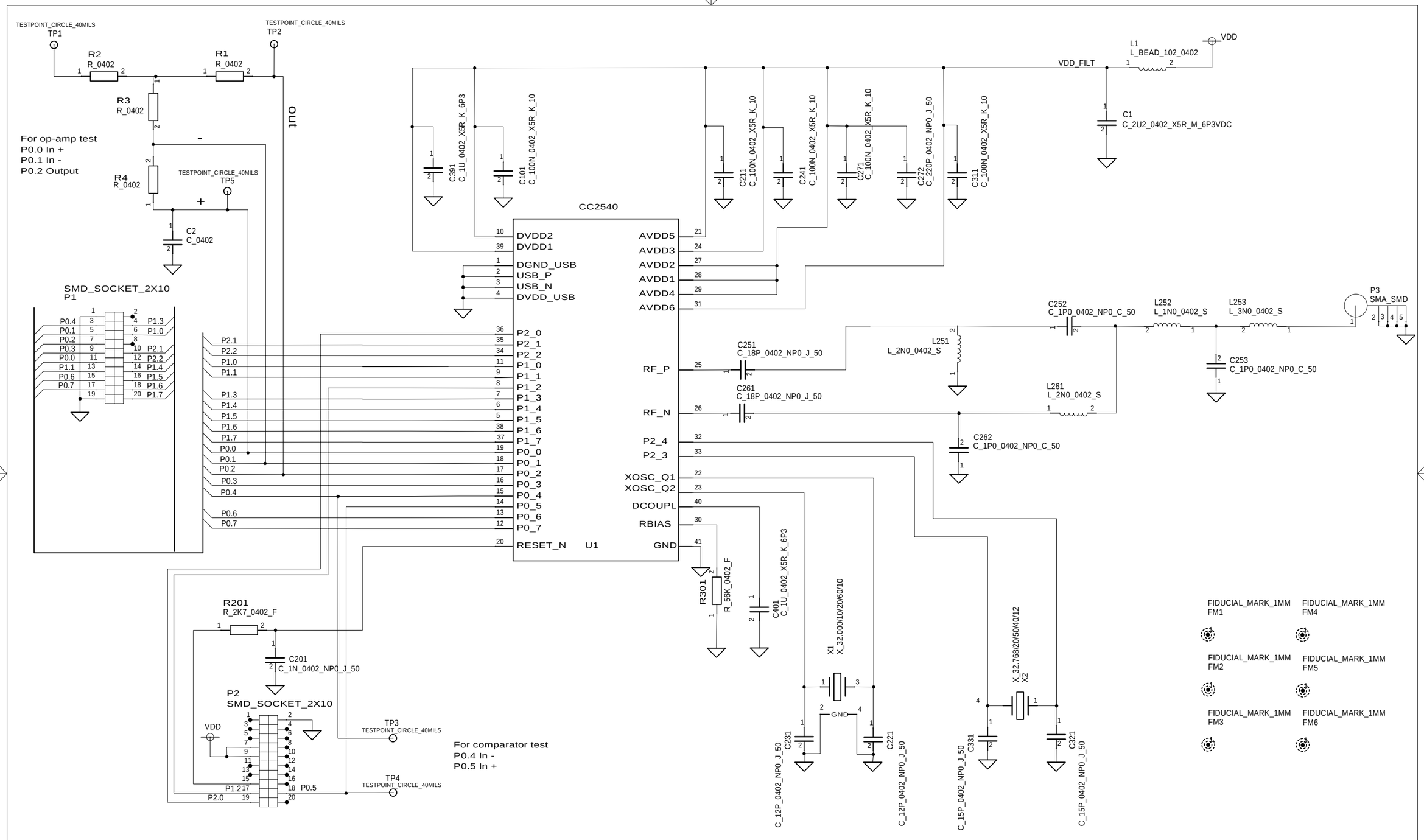

CONTRACT NO.		COMPANY NAME Texas Instruments			
APPROVALS	DATE	DWG CC2540EM Discrete			
DRAWN	SVG	SIZE A4	FSCM NO.	DWG NO.	REV. 1.5.1
CHECKED	NN				
ISSUED		SCALE			SHEET 1 (1)