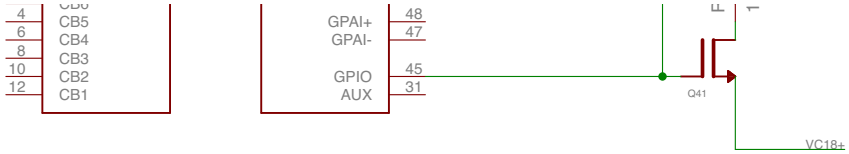

Device #4 cell interface, balancing, thermistors, GPIO

RELEASE

Board: Battery Interface Module
Drawn by Aaron Bonnell-Kangas
Revision date: v2.0.2 - 2016-02-28
Last modified date: 2/28/16 11:41 PM

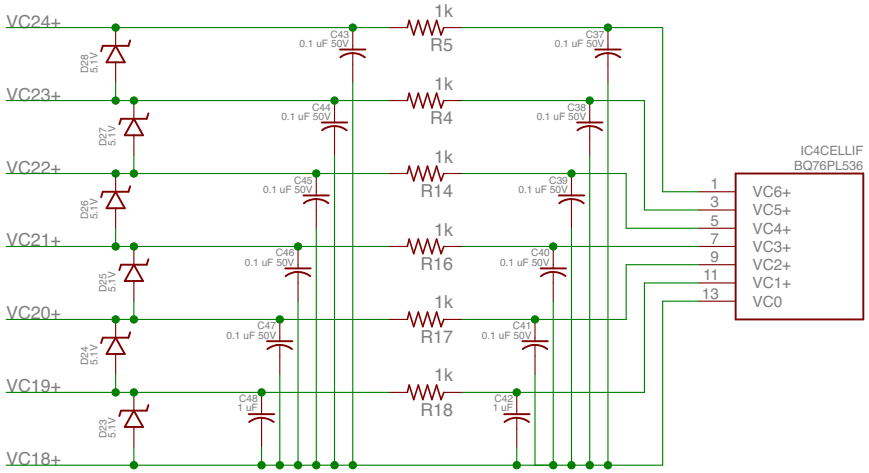
VC24+
VC23+
VC22+
VC21+
VC20+
VC19+
VC18+
D28 5.1V
D27 5.1V
D26 5.1V
D25 5.1V
D24 5.1V
D23 5.1V
C43 0.1 uF 50V
C44 0.1 uF 50V
C45 0.1 uF 50V
C46 0.1 uF 50V
C47 0.1 uF 50V
C48 1 uF
C37 0.1 uF 50V
C38 0.1 uF 50V
C39 0.1 uF 50V
C40 0.1 uF 50V
C41 0.1 uF 50V
C42 1 uF
1k
R5
R4
R14
R16
R17
R18
IC4CELLIF
BQ76PL536
1
3
5
7
9
11
13
VC6+
VC5+
VC4+
VC3+
VC2+
VC1+
VC0

IC4BALANCEIF
BQ76PL536
2
CB6

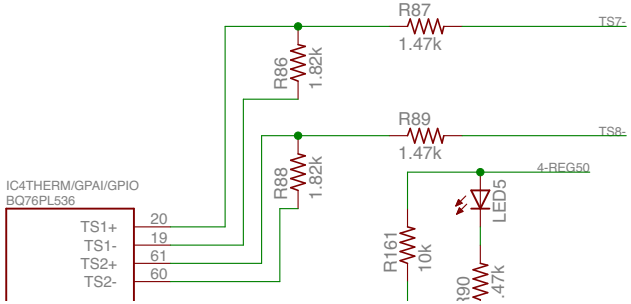
R87
1.47k
TS7-
R86
1.82k
R89
1.47k
TS8-
4-REG50
IC4THERM/GPAI/GPIO
BQ76PL536
R88
1.82k
LED5
TS1+
TS1-
TS2+
TS2-
20
19
61
60
R161
10k
.47k

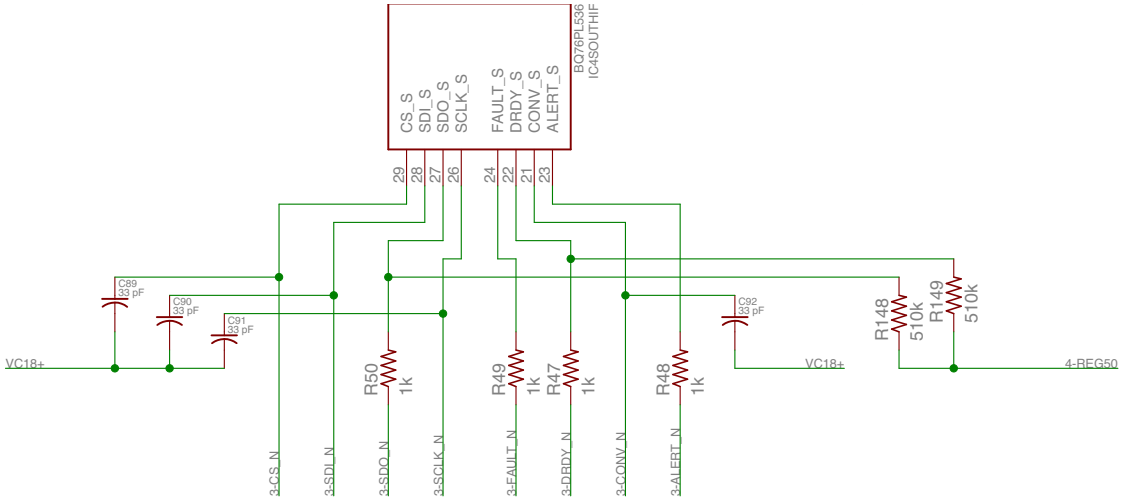

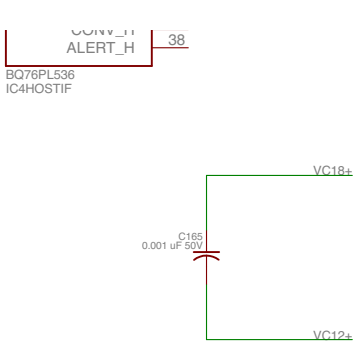

Device #4 stack comms + power

RELEASE

Board: Battery Interface Module
Drawn by Aaron Bonnell-Kangas
Revision date: v2.0.2 - 2016-02-28
Last modified date: 2/28/16 11:41 PM

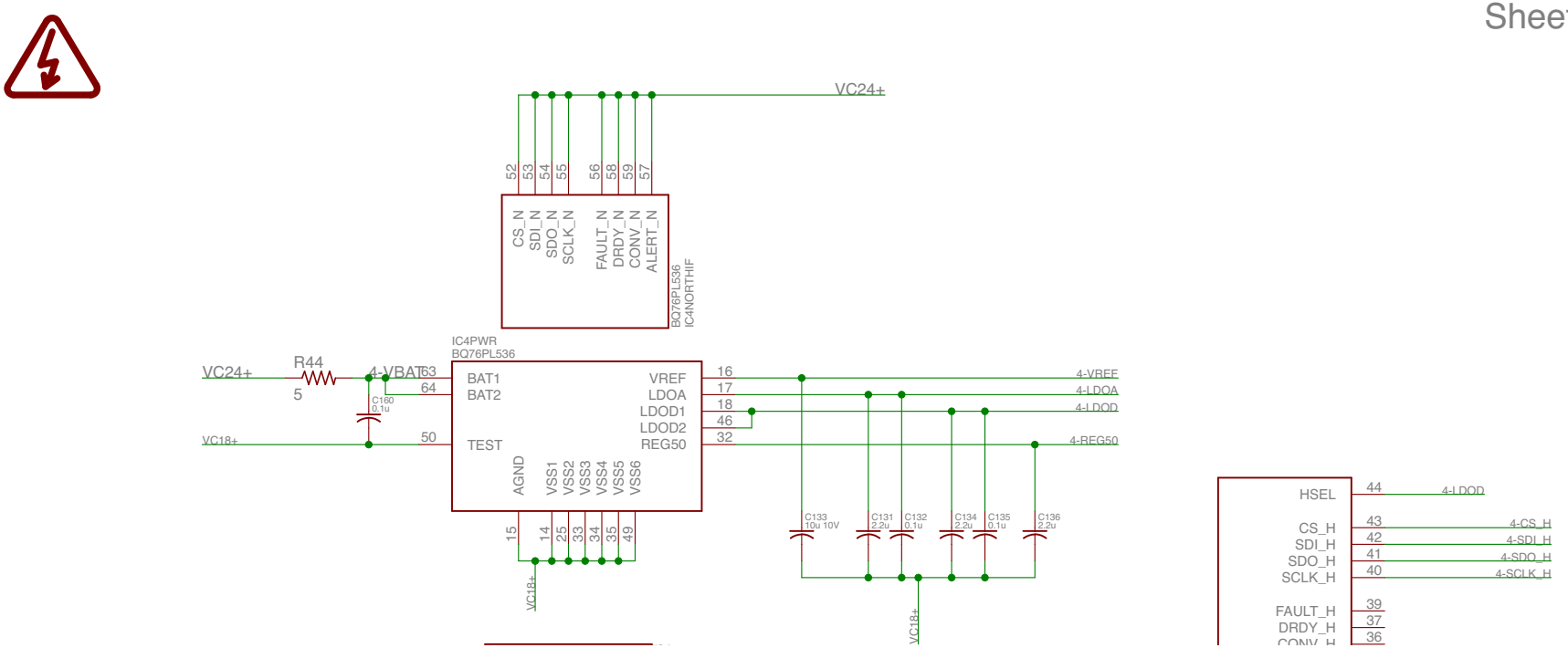
VC24+
52
53
54
55
56
58
59
57
CS_N
SDI_N
SDO_N
SCLK_N
FAULT_N
DRDY_N
CONV_N
ALERT_N
BQ76PL536
IC4NORTHIF
IC4PWR
BQ76PL536
VC24+
R44
5
4-VBAT
63
64
C160
0.1u
VC18+
50
BAT1
BAT2
TEST
AGND
VSS1
VSS2
VSS3
VSS4
VSS5
VSS6
15
14
25
33
34
35
49
VC18+
VREF
LDOA
LDOD1
LDOD2
REG50
16
17
18
46
32
4-VREF
4-LDOA
4-LDOD
4-REG50
C133
10u 10V
C131
2.2u
C132
0.1u
C134
2.2u
C135
0.1u
C136
2.2u
VC18+
HSEL
44
4-LDOD
CS_H
SDI_H
SDO_H
SCLK_H
43
42
41
40
4-CS_H
4-SDI_H
4-SDO_H
4-SCLK_H
FAULT_H
DRDY_H
39
37

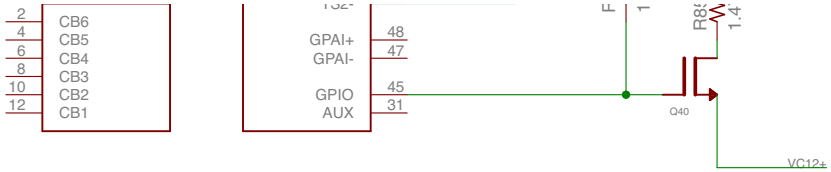

Device #3 cell interface, balancing, thermistors, GPIO

RELEASE

Board: Battery Interface Module
Drawn by Aaron Bonnell-Kangas
Revision date: v2.0.2 - 2016-02-28
Last modified date: 2/28/16 11:41 PM

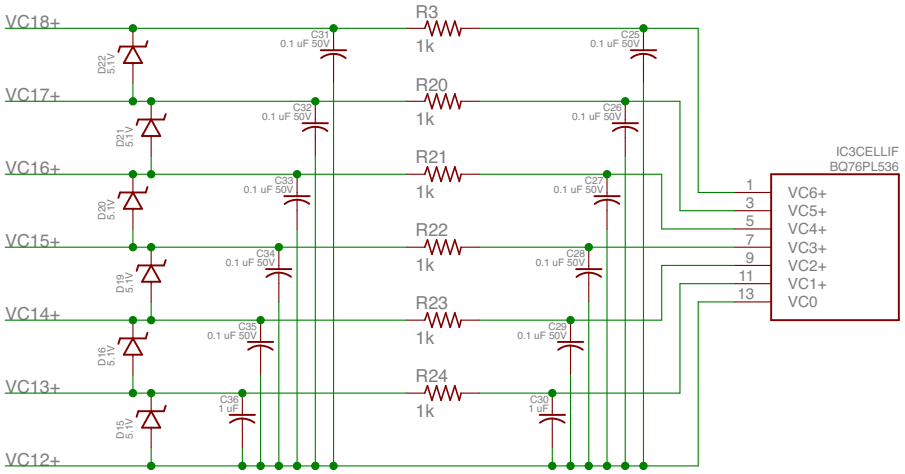

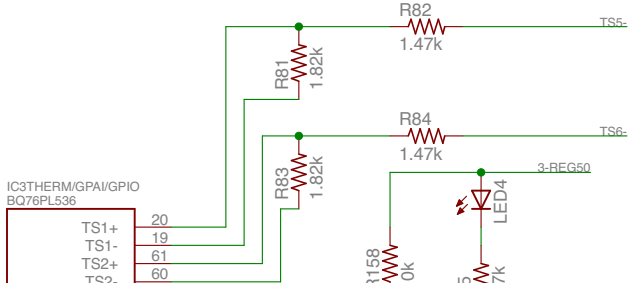

IC3BALANCEIF
BQ76PL536

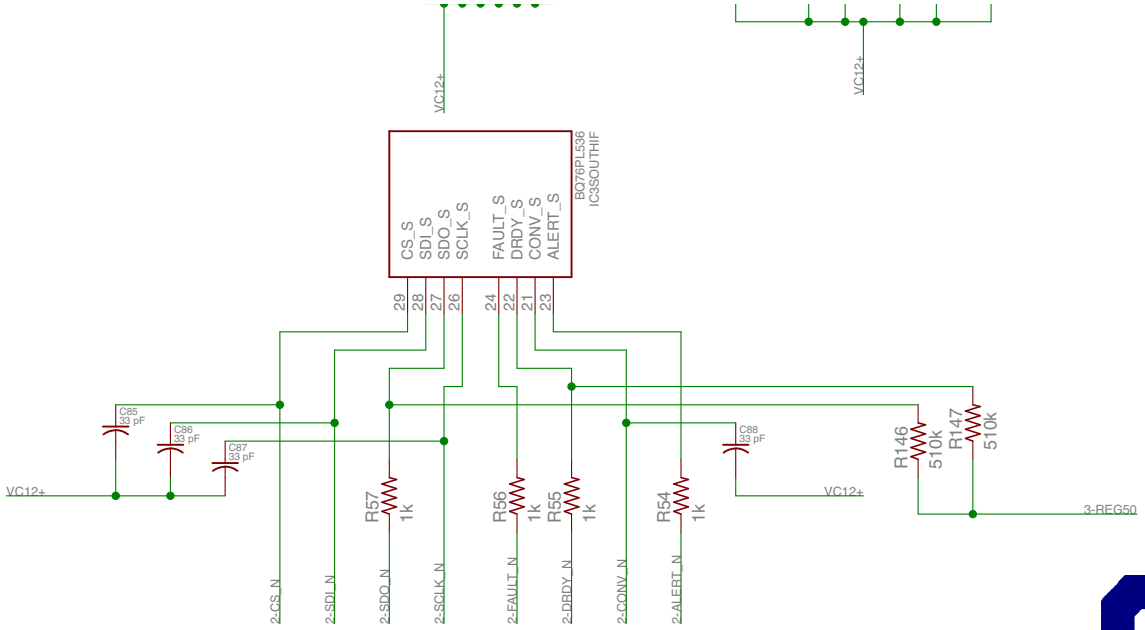

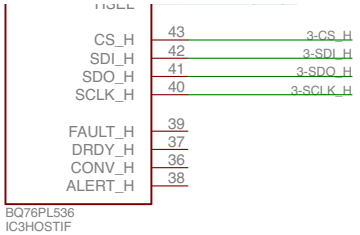

Device #3 stack comms + power

RELEASE

Board: Battery Interface Module

Drawn by Aaron Bonnell-Kangas

Revision date: v2.0.2 - 2016-02-28

Last modified date: 2/28/16 11:41 PM

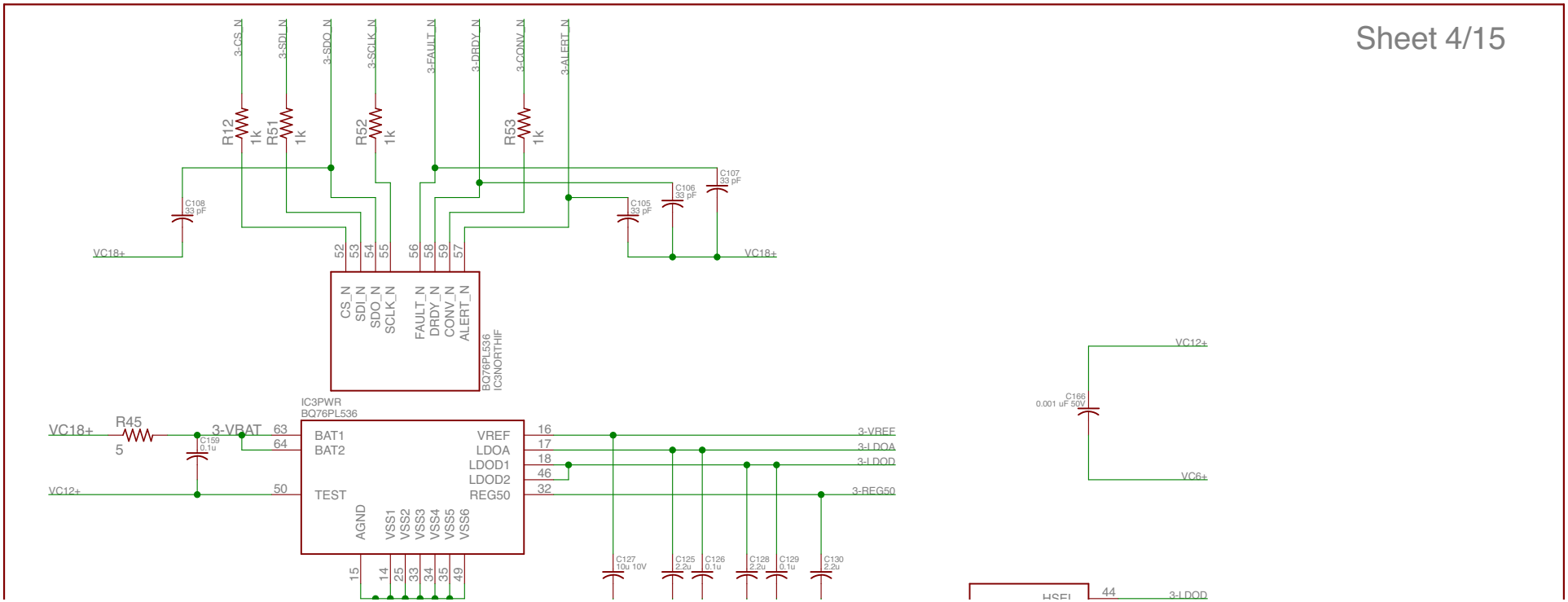
3-CS_N
3-SDI_N
3-SDO_N
3-SCLK_N
3-FAULT_N
3-DRDY_N
3-CONV_N
3-ALERT_N
R12 1k
R51 1k
R52 1k
R53 1k
C108 33 pF
C105 33 pF
C106 33 pF
C107 33 pF
VC18+
52 53 54 55 56 58 59 57
CS_N SDI_N SDO_N SCLK_N FAULT_N DRDY_N CONV_N ALERT_N
BQ76PL536 IC3NORTHIF
IC3PWR
BQ76PL536
R45 5
C159 0.1u
3-VBAT
63 64
BAT1 BAT2
TEST
50
VREF LDOA LDOD1 LDOD2 REG50
16 17 18 46 32
3-VREF
3-LDOA
3-LDOD
3-REG50
AGND VSS1 VSS2 VSS3 VSS4 VSS5 VSS6
15 14 25 33 34 35 49
C127 10u 10V
C125 2.2u
C126 0.1u
C128 2.2u
C129 0.1u
C130 2.2u
C166 0.001 uF 50V
VC6+
HSFI 44

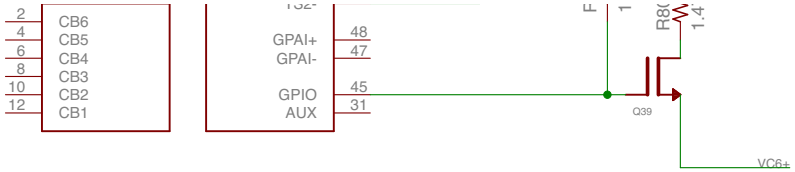

Device #2 cell interface, balancing, thermistors, GPIO

RELEASE

Board: Battery Interface Module
Drawn by Aaron Bonnell-Kangas
Revision date: v2.0.2 - 2016-02-28
Last modified date: 2/28/16 11:41 PM

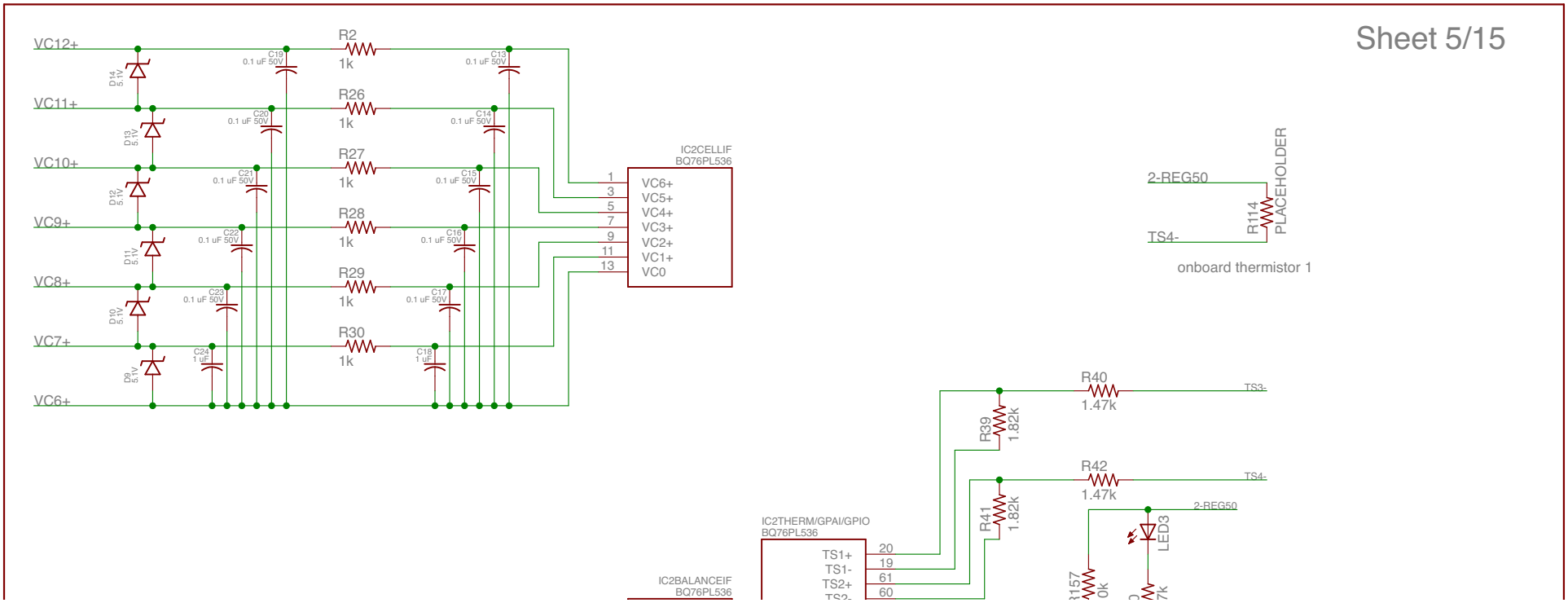
Sheet 5/15
VC12+
VC11+
VC10+
VC9+
VC8+
VC7+
VC6+
R2
R26
R27
R28
R29
R30
1k
C19
C20
C21
C22
C23
C24
C13
C14
C15
C16
C17
C18
0.1 uF 50V
1 uF
D14
D13
D12
D11
D10
D9
5.1V
IC2CELLIF
BQ76PL536
1
3
5
7
9
11
13
VC6+
VC5+
VC4+
VC3+
VC2+
VC1+
VC0
2-REG50
TS4-
R114
PLACEHOLDER
onboard thermistor 1
IC2BALANCEIF
BQ76PL536
IC2THERM/GPAI/GPIO
BQ76PL536
TS1+
TS1-
TS2+
20
19
61
60
R39
1.82k
R41
1.82k
R40
1.47k
R42
1.47k
TS3-
TS4-
2-REG50
LED3
0k
7k

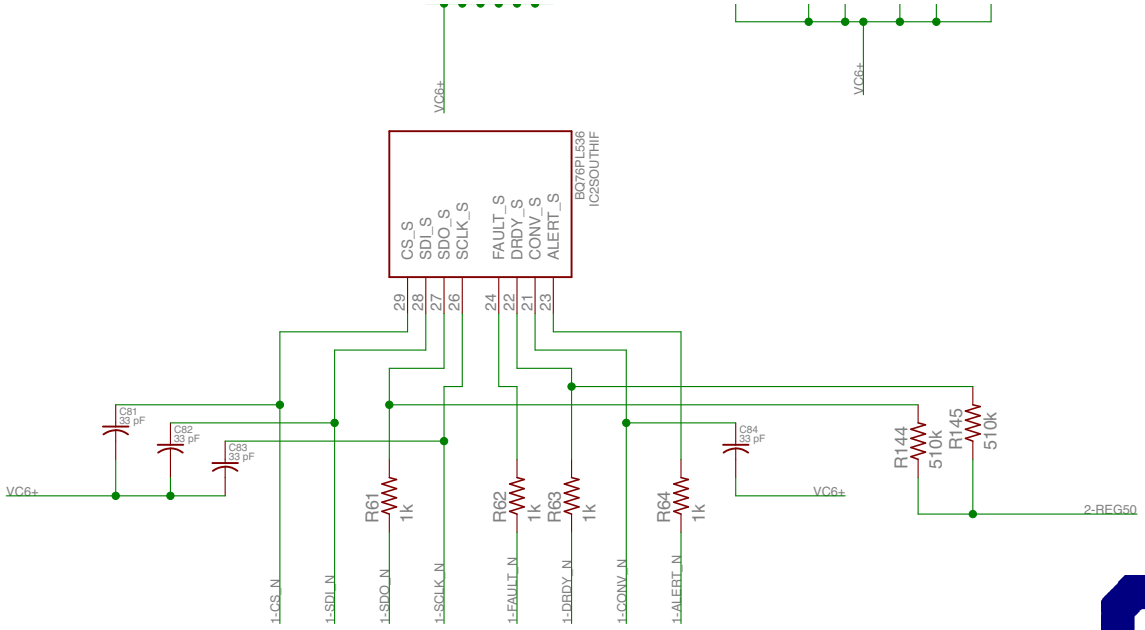

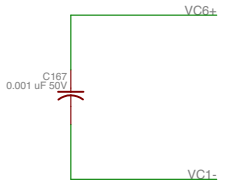

Device #2 stack comms + power

RELEASE

Board: Battery Interface Module

Drawn by Aaron Bonnell-Kangas

Revision date: v2.0.2 - 2016-02-28

Last modified date: 2/28/16 11:41 PM

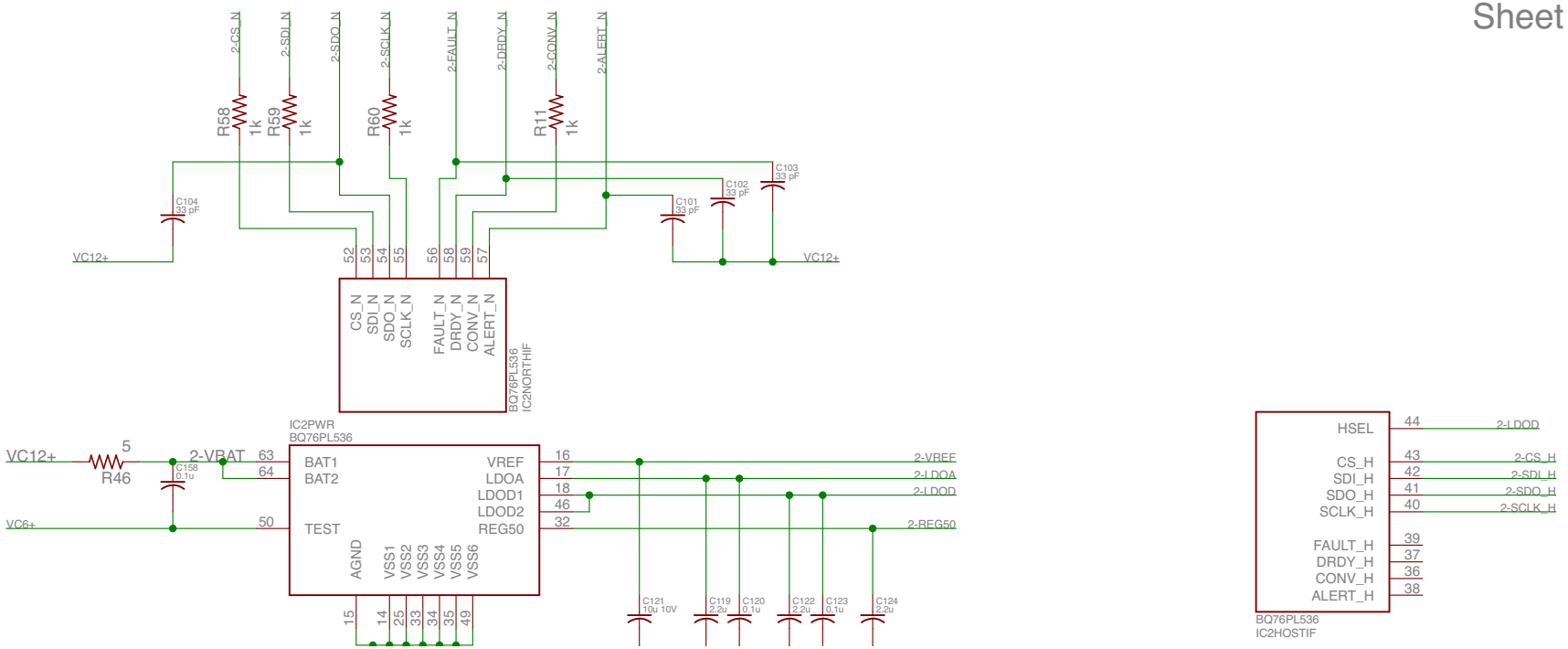
2-CS_N
2-SDI_N
2-SDO_N
2-SCLK_N
2-FAULT_N
2-DRDY_N
2-CONV_N
2-ALERT_N
R58 1k
R59 1k
R60 1k
R11 1k
C104 33 pF
C103 33 pF
C102 33 pF
C101 33 pF
VC12+
VC12+
52 53 54 55 56 58 59 57
CS_N SDI_N SDO_N SCLK_N FAULT_N DRDY_N CONV_N ALERT_N
BQ76PL536 IC2NORTHIF
IC2PWR
BQ76PL536
VC12+
5
R46
2-VBAT
C158 0.1u
VC6+
63 64 50
BAT1 BAT2 TEST
VREF LDOA LDOD1 LDOD2 REG50
16 17 18 46 32
2-VREF
2-LDOA
2-LDOD
2-REG50
AGND VSS1 VSS2 VSS3 VSS4 VSS5 VSS6
15 14 25 33 34 35 49
C121 10u 10V
C119 2.2u
C120 0.1u
C122 2.2u
C123 0.1u
C124 2.2u
HSEL
CS_H SDI_H SDO_H SCLK_H
FAULT_H DRDY_H CONV_H ALERT_H
44 43 42 41 40 39 37 36 38
2-LDOD
2-CS_H
2-SDI_H
2-SDO_H
2-SCLK_H
BQ76PL536
IC2HOSTIF

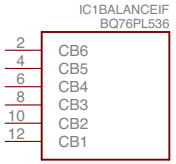

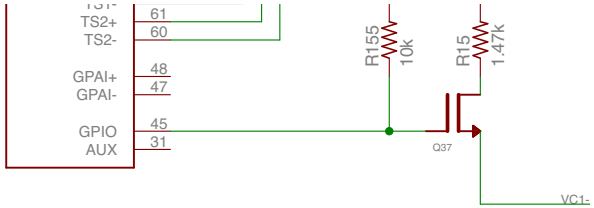

Device #1 cell interface, balancing, thermistors, GPIO

RELEASE

Board: Battery Interface Module
Drawn by Aaron Bonnell-Kangas
Revision date: v2.0.2 - 2016-02-28
Last modified date: 2/28/16 11:41 PM

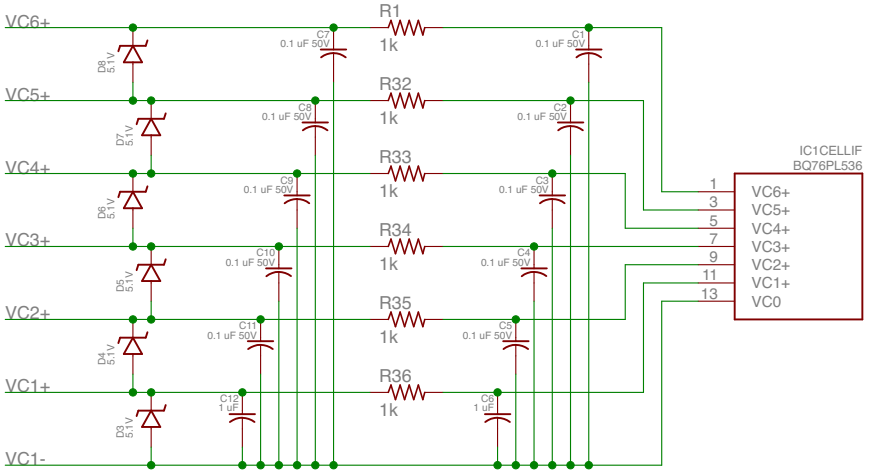
VC6+
VC5+
VC4+
VC3+
VC2+
VC1+
VC1-
R1
1k
R32
1k
R33
1k
R34
1k
R35
1k
R36
1k
C7
0.1 uF 50V
C1
0.1 uF 50V
C8
0.1 uF 50V
C2
0.1 uF 50V
C9
0.1 uF 50V
C3
0.1 uF 50V
C10
0.1 uF 50V
C4
0.1 uF 50V
C11
0.1 uF 50V
C5
0.1 uF 50V
C12
1 uF
C6
1 uF
D8
5.1V
D7
5.1V
D6
5.1V
D5
5.1V
D4
5.1V
D3
5.1V
IC1CELLIF
BQ76PL536
1
3
5
7
9
11
13
VC6+
VC5+
VC4+
VC3+
VC2+
VC1+
VC0

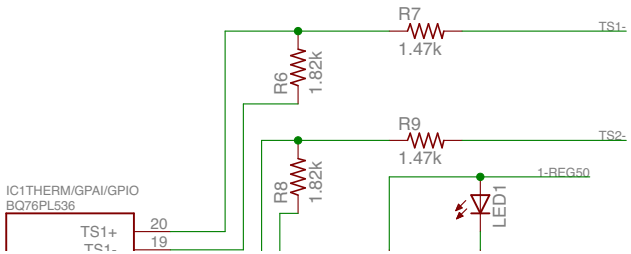
R7
1.47k
TS1-
R6
1.82k
R9
1.47k
TS2-
R8
1.82k
1-REG50
LED1
IC1THERM/GPAI/GPIO
BQ76PL536
TS1+
20
19

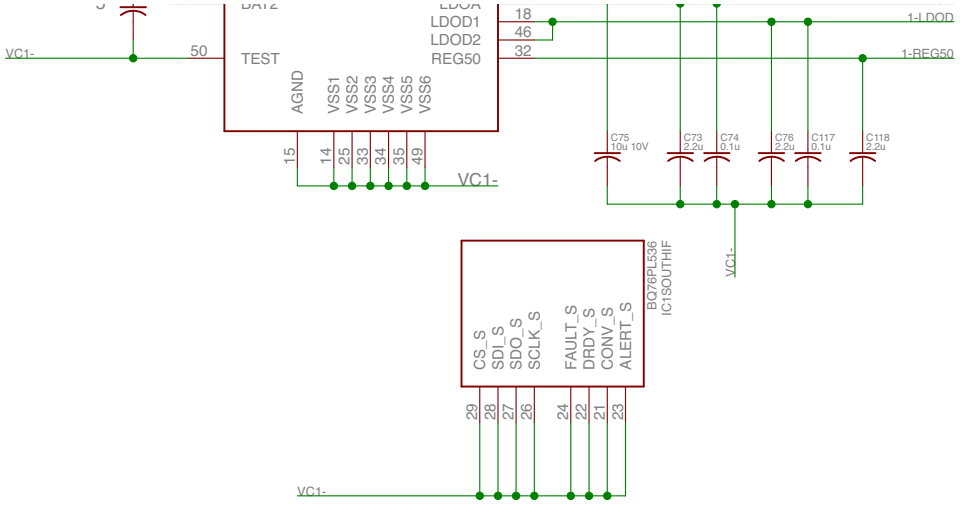

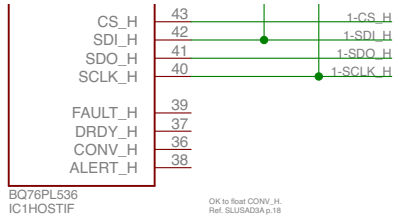

Device #1 stack comms + power

RELEASE

Board: Battery Interface Module

Drawn by Aaron Bonnell-Kangas

Revision date: v2.0.2 - 2016-02-28

Last modified date: 2/28/16 11:41 PM

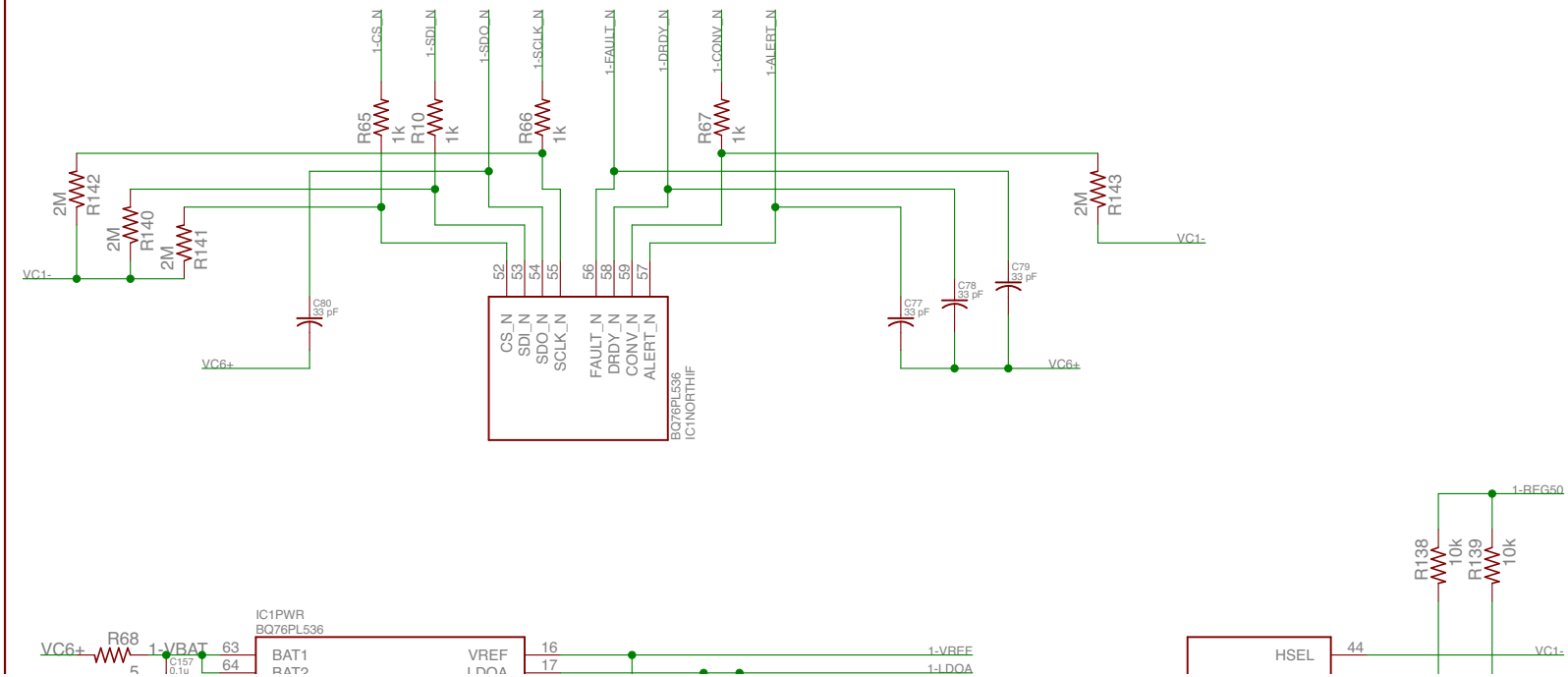
1-CS_N
1-SDI_N
1-SDO_N
1-SCLK_N
1-FAULT_N
1-DRDY_N
1-CONV_N
1-ALERT_N
R65 1k
R10 1k
R66 1k
R67 1k
2M R142
2M R140
2M R141
2M R143
VC1-
C80 33 pF
C77 33 pF
C78 33 pF
C79 33 pF
VC6+
52 53 54 55 56 58 59 57
CS_N SDI_N SDO_N SCLK_N FAULT_N DRDY_N CONV_N ALERT_N
BQ76PL536
IC1NORTHIF
IC1PWR
BQ76PL536
VC6+
R68
1-VBAT
63 64
BAT1 BAT2
C157 0.1u
VREF LDOA
16 17
1-VREF
1-LDOA
1-REG50
R138 10k
R139 10k
HSEL
44
VC1-

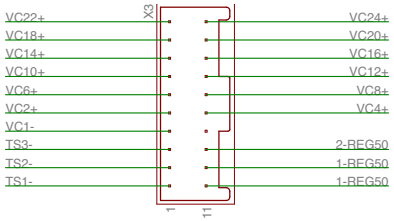

Cell and thermistor connectors

RELEASE

Board: Battery Interface Module
Drawn by Aaron Bonnell-Kangas
Revision date: v2.0.2 - 2016-02-28
Last modified date: 2/28/16 11:41 PM

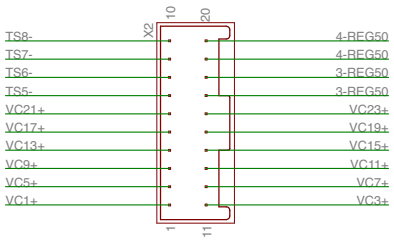
X2
10
20
1
11
TS8-
TS7-
TS6-
TS5-
VC21+
VC17+
VC13+
VC9+
VC5+
VC1+
4-REG50
4-REG50
3-REG50
3-REG50
VC23+
VC19+
VC15+
VC11+
VC7+
VC3+

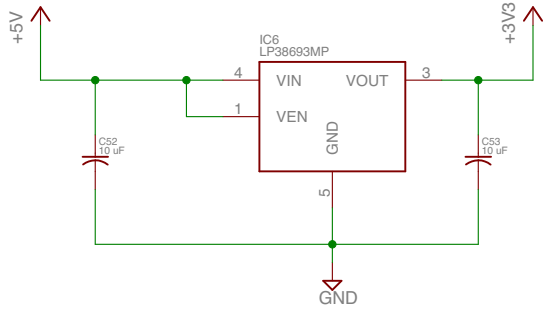

12V - 5V, 5V-3V3 power

RELEASE

Board: Battery Interface Module
Drawn by Aaron Bonnell-Kangas
Revision date: v2.0.2 - 2016-02-28
Last modified date: 2/28/16 11:41 PM

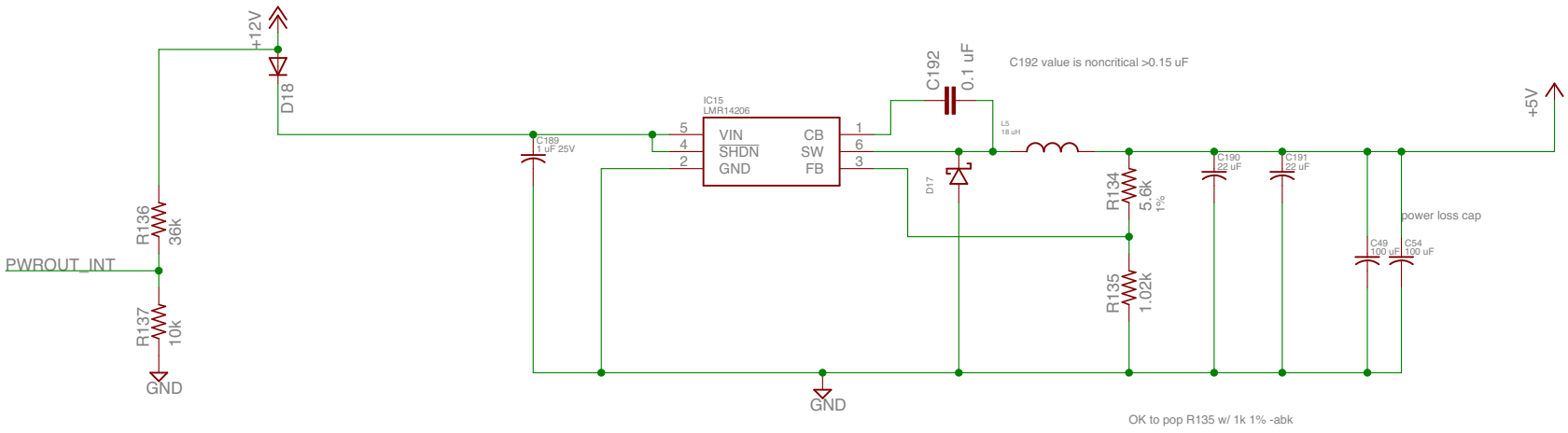

ref. WEBENCH design

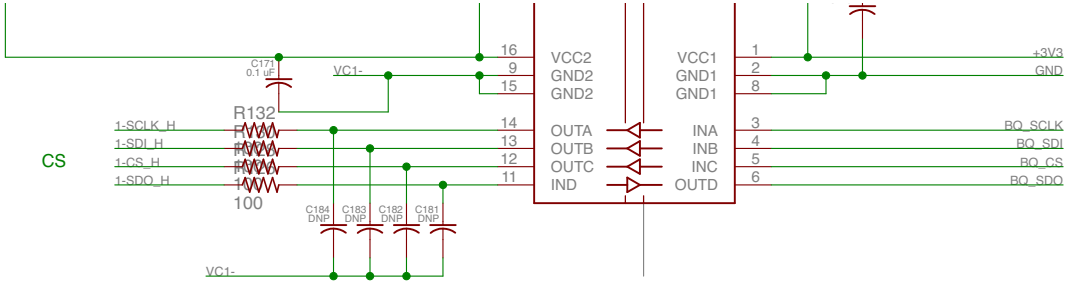

C181-C188 DNP UNLESS EMERGENCY

Isolated comms interface

RELEASE

Board: Battery Interface Module
Drawn by Aaron Bonnell-Kangas
Revision date: v2.0.2 - 2016-02-28
Last modified date: 2/28/16 11:41 PM

Battery side

Host side

Sheet 11/15

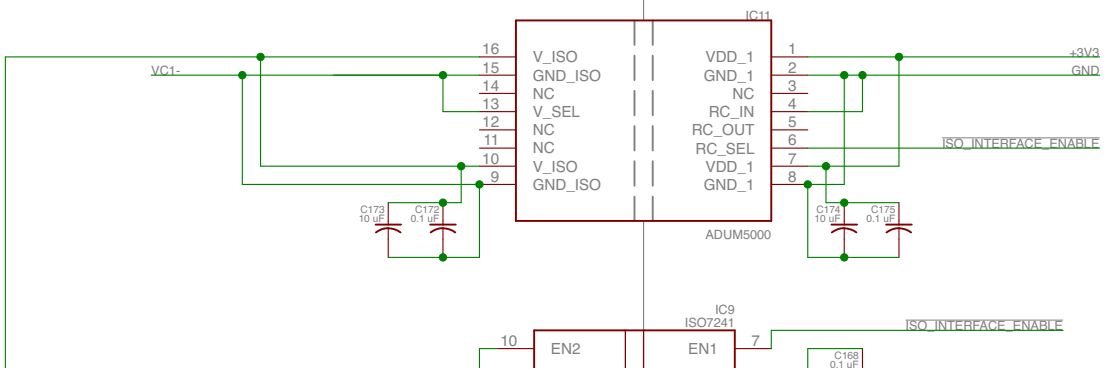

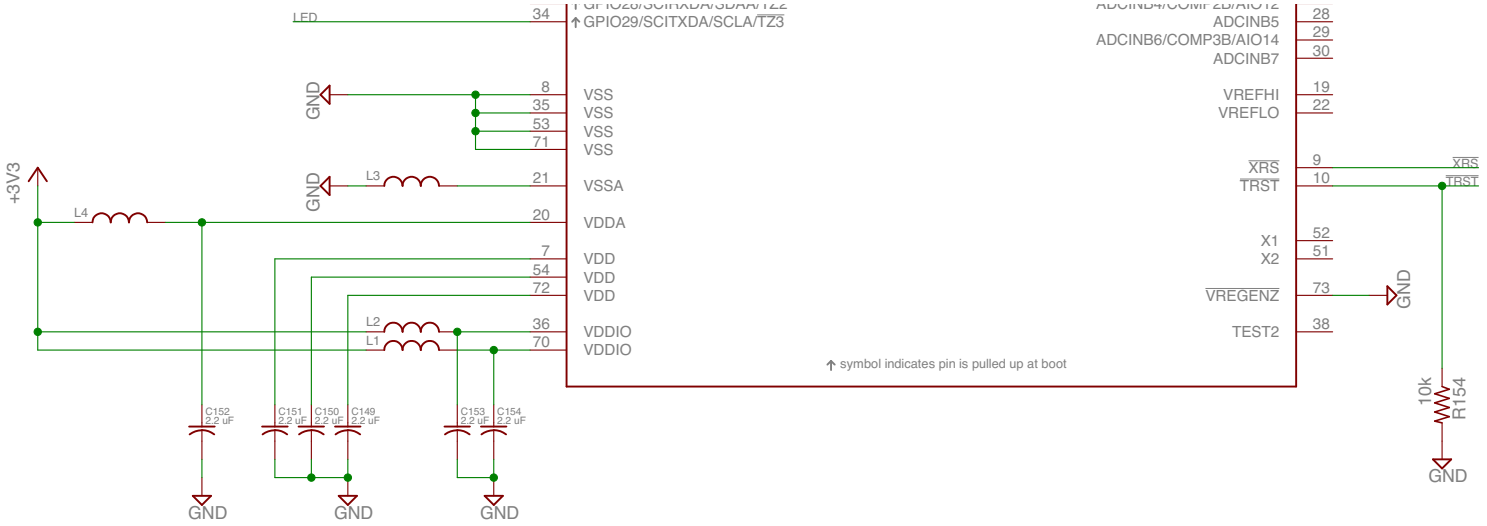

F28035 connections

RELEASE

Board: Battery Interface Module

Drawn by Aaron Bonnell-Kangas

Revision date: v2.0.2 - 2016-02-28

Last modified date: 2/28/16 11:41 PM

IC7
TMS320F28034PNT
69 GPIO0/EPWM1A
68 GPIO1/EPWM1B/COMP1OUT
67 GPIO2/EPWM2A
66 GPIO3/EPWM2B/SPISOMIA/COMP2OUT
63 GPIO4/EPWM3A
62 GPIO5/EPWM6B/LINRXA/HRCAP2
50 GPIO6/EPWM4A/EPWMSYNCI/EPWMSYNCO
49 GPIO7/EPWM4B/SCIRXDA
43 GPIO8/EPWM5A/ADCSOCAO
39 GPIO9/EPWM5B/LINTXA/HRCAP1
65 GPIO10/EPWM6A/ADCSOCBO
61 GPIO11/EPWM6B/LINRXA/HRCAP2
47 GPIO12/TZ1/SCITXDA/SPISOMIB
BQ_SDO 76 GPIO13/TZ2/SPISOMIB
BQ_SCLK 77 GPIO14/TZ3/LINTXA/SPICLKB
75 GPIO15/TZ1/LINRXA/SPISTEB
46 GPIO16/SPISOMIA/TZ2
42 GPIO17/SPISOMIA/TZ3
41 GPIO18/SPICLKA/LINTXA/XCLKOUT
55 GPIO19/XCLKIN/SPISTEA/LINRXA/ECAP1
ISO_INTERFACE_ENABLE 78 GPIO20/EQEP1A/COMP1OUT
79 GPIO21/EQEP1B/COMP2OUT
BQ_CS 1 GPIO22/EQEP1S/LINTXA
4 GPIO23/EQEP1I/LINRXA
BQ_SDI 80 GPIO24/ECAP1/SPISIMOB
44 GPIO25/SPISOMIB
37 GPIO26/HRCAP1/SPICLKB
31 GPIO27/HRCAP2/SPISTEB
40 GPIO28/SCIRXDA/SDAA/TZ2
GPIO30/CANRXA 33 CAN-RX
GPIO31/CANTXA 32 CAN-TX
GPIO32/SDAA/EPWMSYNCI/ADCSOCAO 2
GPIO33/SCLA/EPWMSYNCO/ADCSOCBO 3
GPIO34/COMP2OUT/COMP3OUT 74
GPIO35/TDI 59 TDI
GPIO36/TMS 60 TMS
GPIO37/TDO 58 TDO
GPIO38/TCK/XCLKIN 57 TCK
GPIO39 56
GPIO40/EPWM7A 64
GPIO41/EPWM7B 48
GPIO42/COMP1OUT 5
GPIO43/COMP42OUT 6
GPIO44 45
ADCINA0 18
ADCINA1 17
ADCINA2/COMP1A/AIO2 16
ADCINA3 15
ADCINA4/COMP2A/AIO4 14
ADCINA5 13
ADCINA6/COMP3A/AIO6 12 PWROUT_INT
ADCINA7 11
ADCINB0 23
ADCINB1 24
ADCINB2/COMP1B/AIO10 25
ADCINB3 26
ADCINB4/COMP2B/AIO12 27

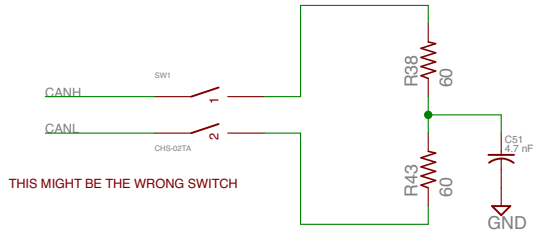

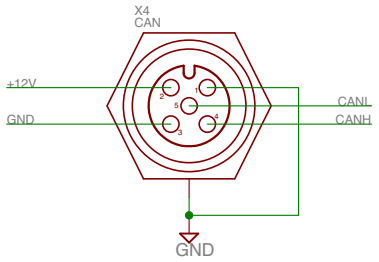

CAN interface and termination

RELEASE

Board: Battery Interface Module
Drawn by Aaron Bonnell-Kangas
Revision date: v2.0.2 - 2016-02-28
Last modified date: 2/28/16 11:41 PM

Sheet 13/15

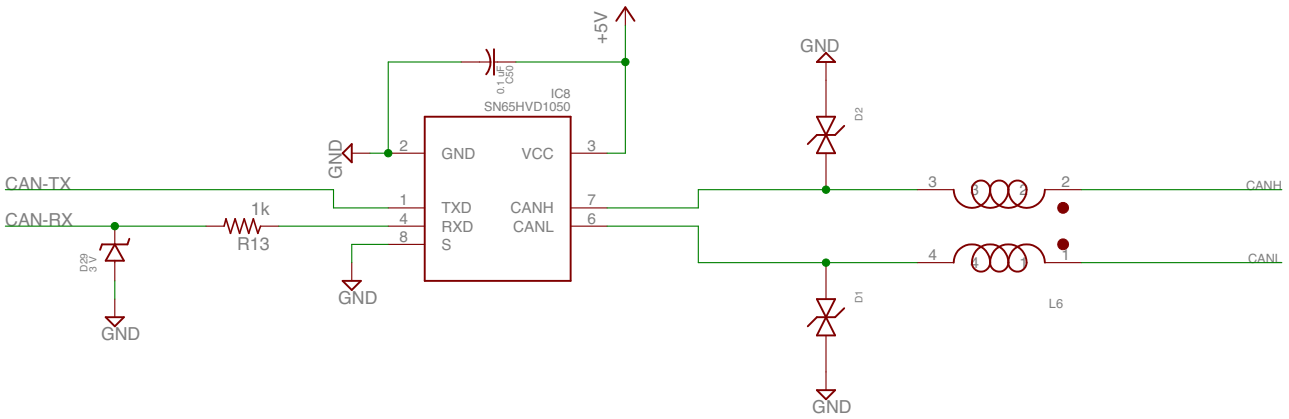

+5V
0.1 uF
C50
IC8
SN65HVD1050
GND
VCC
TXD
RXD
S
CANH
CANL
CAN-TX
CAN-RX
1k
R13
D29
3 V
GND
GND
GND
GND
D2
D1
L6
CANH
CANL

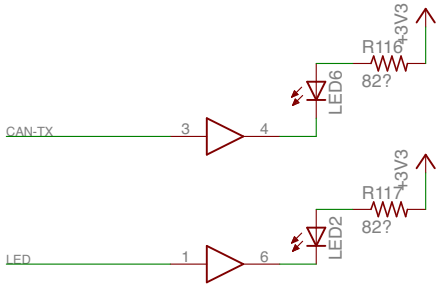

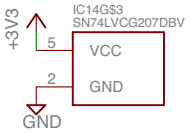

JTAG, LEDs

RELEASE

Board: Battery Interface Module
Drawn by Aaron Bonnell-Kangas
Revision date: v2.0.2 - 2016-02-28
Last modified date: 2/28/16 11:41 PM

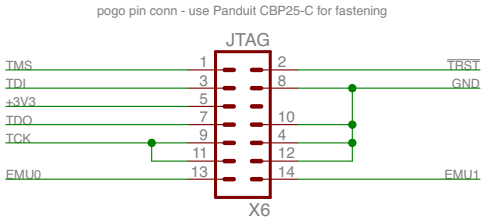
pogo pin conn - use Panduit CBP25-C for fastening
JTAG
TMS
TDI
+3V3
TDO
TCK
EMU0
1
3
5
7
9
11
13
2
8
10
4
12
14
TRST
GND
EMU1
X6

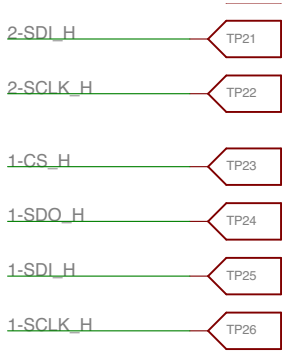

Test points

RELEASE

Board:
Drawn by
Revision date:
Last modified date: 2/28/16 11:41 PM

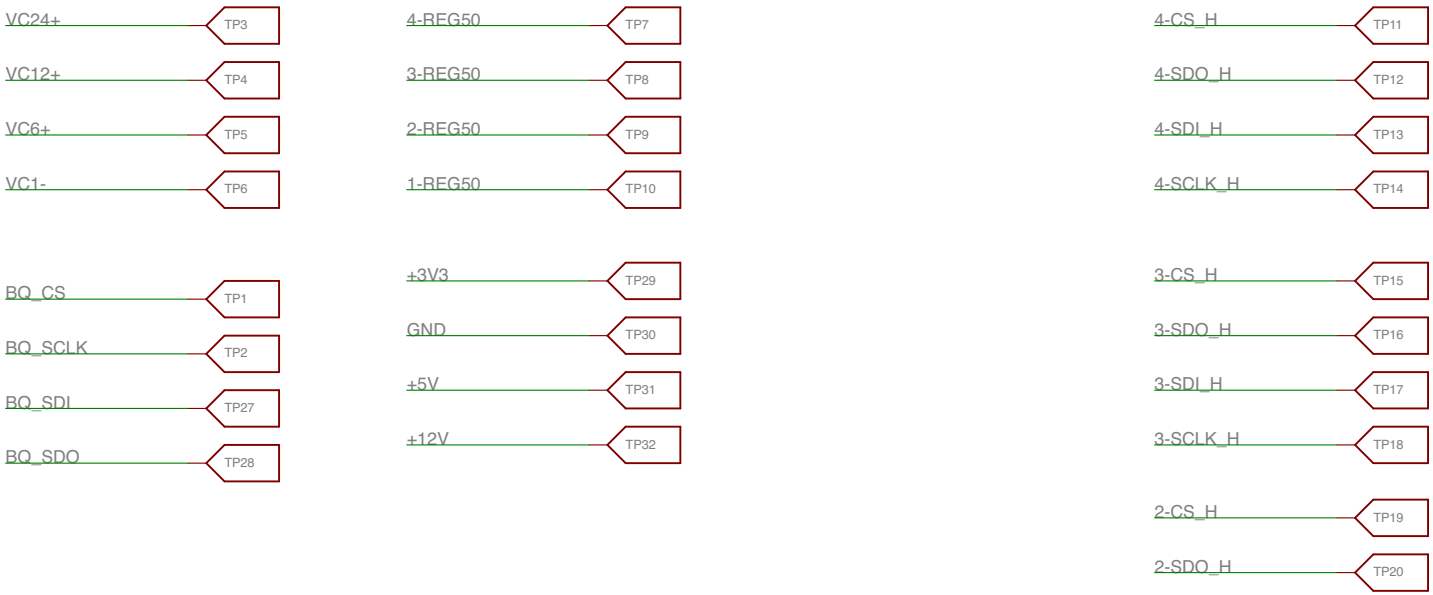
VC24+
TP3
VC12+
TP4
VC6+
TP5
VC1-
TP6
BQ_CS
TP1
BQ_SCLK
TP2
BQ_SDI
TP27
BQ_SDO
TP28
4-REG50
TP7
3-REG50
TP8
2-REG50
TP9
1-REG50
TP10
+3V3
TP29
GND
TP30
+5V
TP31
+12V
TP32
4-CS_H
TP11
4-SDO_H
TP12
4-SDI_H
TP13
4-SCLK_H
TP14
3-CS_H
TP15
3-SDO_H
TP16
3-SDI_H
TP17
3-SCLK_H
TP18
2-CS_H
TP19
2-SDO_H
TP20