Project Report

Student Name: Aaryaman Singh
UID: 24MCA20449
Branch: MCA
Section/Group: 3A
Semester: 4th
Date of Performance: 20/04/2026
Subject Name: Internet of things lab
Subject Code: 24CAP-751

1. **Aim:** IoT Based Smart Toll Gate System to automatically collect toll and monitor vehicle movement from a remote location.

2. **Objectives:**
   - To automate toll collection using RFID technology to reduce manual work and human errors.
   - To identify vehicles automatically by reading RFID cards/tags for fast processing at toll gates.
   - To control gate operations (open/close) using a servo motor based on vehicle validation and balance.
   - To monitor and manage the system remotely using IoT (Wi-Fi/Blynk app) for real-time updates.
   - To reduce traffic congestion and waiting time at toll plazas by enabling quick and efficient vehicle movement.

3. **Components Required:**

Sno	Name of Component	Qty.
1.	NodeMCU (ESP8266)	1
2.	RFID Reader (RC522)	1
3.	RFID Card/Tag	4
4.	LED	2
5.	LCD Display (16x2)	1
6.	Breadboard	1
7.	Servo Motor (Gate Control)	1
8.	Buzzer	1

4. Details of Components:

1. NodeMCU (ESP8266):

The NodeMCU is a low-cost IoT development board based on the ESP8266 Wi-Fi module. It is used as the main controller in this project to process data and connect the system to the internet. It controls all components like RFID reader, sensors, and servo motor.

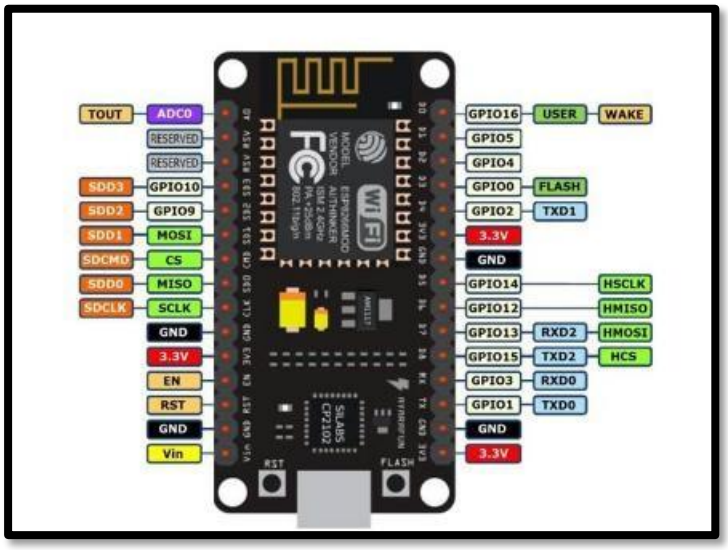

Figure 1: NodeMCU Board

2. RFID Reader (RC522):

The RFID Reader (RC522) is a widely used module for wireless identification and data transfer using radio frequency signals. It operates at 13.56 MHz and is capable of reading data stored in RFID cards or tags.

Figure 2: RFID Reader (RC522)

3. RFID Card/Tag:

RFID cards or tags are passive devices that store unique identification data. These cards do not require a power source and are activated when placed near the RFID reader. In the smart toll gate system, each vehicle is assigned an RFID card which contains user information such as ID and balance.

Figure 3: RFID Card/Tag

4. Servo Motor (Gate Control):

The servo motor is used to control the opening and closing of the toll gate. It operates based on signals received from the NodeMCU. If the RFID card is valid and sufficient balance is available, the servo motor rotates to open the gate. Otherwise, it remains closed. Servo motors provide precise control over angular movement, making them ideal for gate automation.

Figure 4: Servo Motor

5. LCD Display (16x2):

The 16x2 LCD display is used to show important information such as user balance, system messages, and gate status. It helps in providing real-time feedback to the user, such as “Welcome”, “Balance Deducted”, or “Insufficient Balance”. The display enhances user interaction and system transparency.

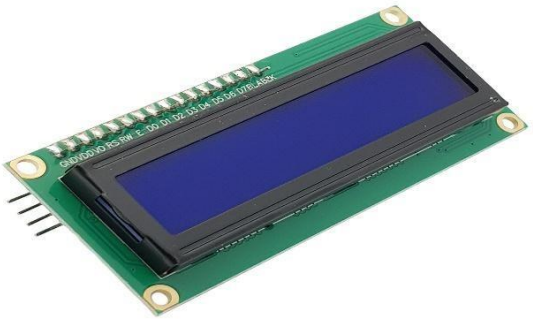

Figure 5: LCD Display

6. Buzzer:

The buzzer is an audio signaling device used to provide alerts and notifications. In this project, it produces sound when an RFID card is scanned or when there is an error such as insufficient balance. It improves user awareness and system response.

Figure 6: Buzzer

7. LED:

LEDs (Light Emitting Diodes) are used as visual indicators in the system. Different LEDs can be used to indicate different statuses, such as green for successful transaction and red for insufficient balance. LEDs help in quick visual understanding of system operations.

Figure 7: LED

8. Breadboard:

The breadboard is used for assembling the circuit without soldering. It allows easy connection and modification of components during testing and development. It is an essential tool for prototyping electronic circuits.

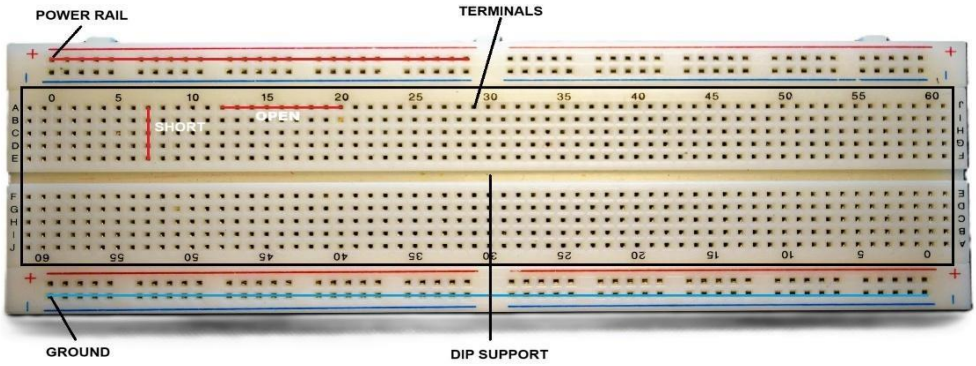

Figure 8: Breadboard

5. Block Diagram of Designed Model:

The proposed system is built around the NodeMCU (ESP8266), which acts as the central controller and enables Wi-Fi-based IoT functionality. When a vehicle arrives, the IR sensor detects its presence and triggers the system, after which the RFID reader (RC522) scans the vehicle's RFID tag. The NodeMCU processes the scanned data and verifies whether sufficient balance is available; if valid, the toll amount is deducted automatically and a signal is sent to the servo motor to open the gate, otherwise the gate remains closed. The LCD display (16×2) provides real-time messages such as "Welcome," "Balance," or "Insufficient Balance," while the buzzer and LED offer audio-visual indications of system status. Additionally, through its Wi-Fi capability, the NodeMCU connects to the Blynk application, allowing real-time monitoring and remote access to transaction data, thereby ensuring an efficient, automated toll collection system that minimizes waiting time and improves traffic flow.

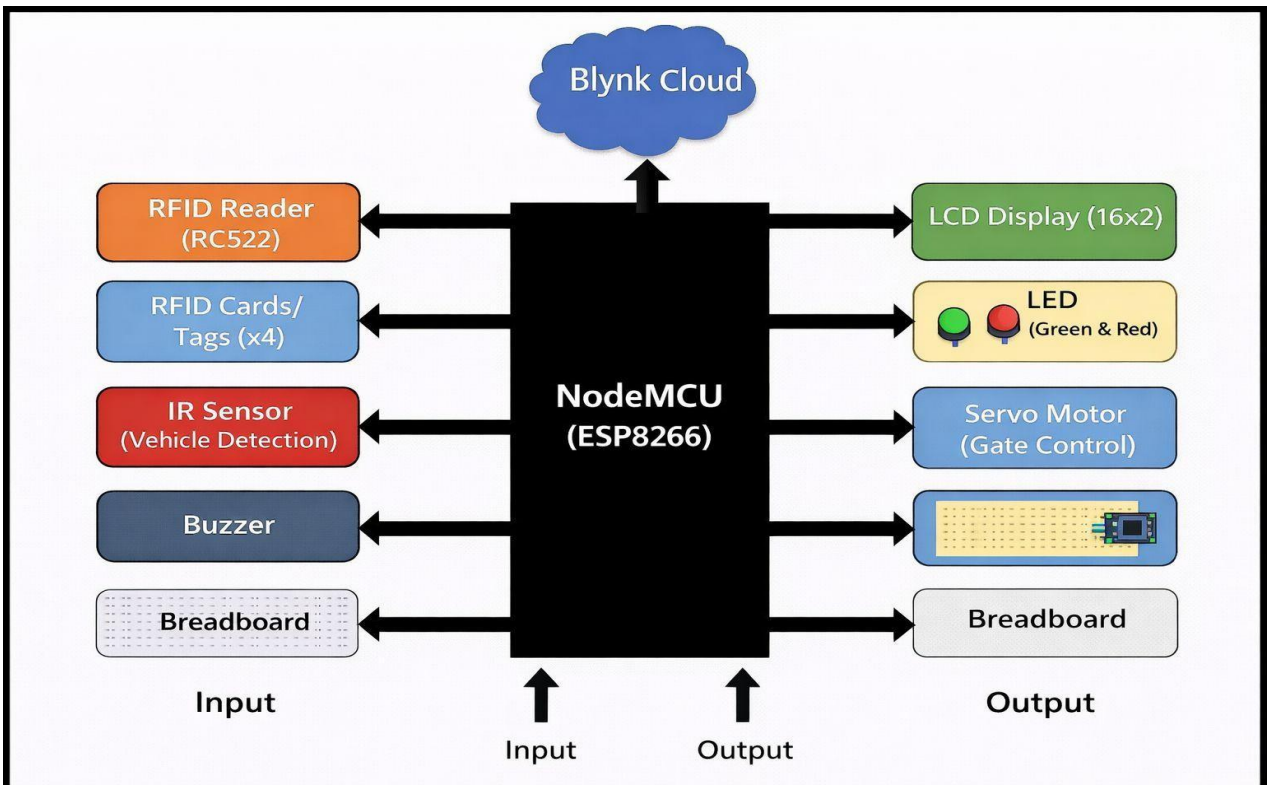

Figure 10: Block Diagram of Model

6. Working of Designed Model:

- As shown in the block diagram, the system uses NodeMCU (ESP8266) as the main controller, which connects all components and enables IoT-based monitoring through Wi-Fi (Blynk App).
- When a vehicle arrives, the IR sensor detects its presence, and the RFID reader scans the RFID card/tag to identify the vehicle and send data to the controller.
- The NodeMCU processes the data, checks the user's balance, and displays the status on the LCD display, while also sending updates to the IoT platform.
- If sufficient balance is available, the toll amount is deducted, the servo motor opens the gate, and a success message is displayed; otherwise, the gate remains closed, and a buzzer alert with "Insufficient Balance" is shown.
- After the vehicle passes, the gate automatically closes, and the system resets for the next vehicle, ensuring smooth and efficient toll operation.

7. Pictures of Prototype:

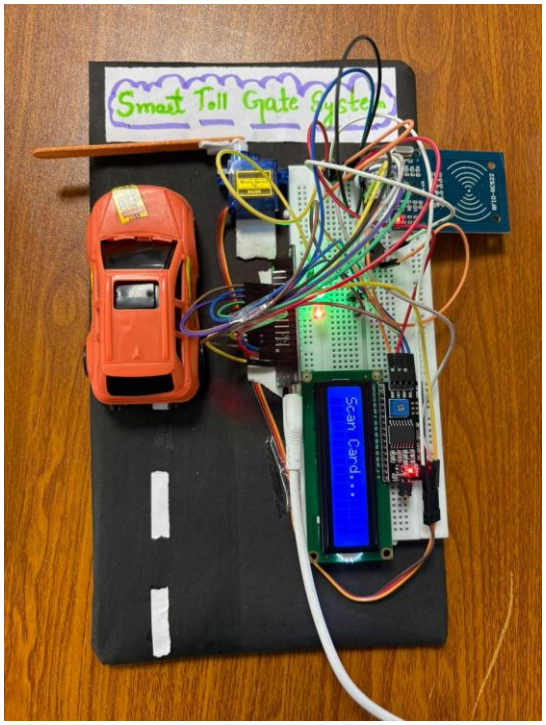

Figure 11: Prototype

8. Output of Deigned Model/Prototype

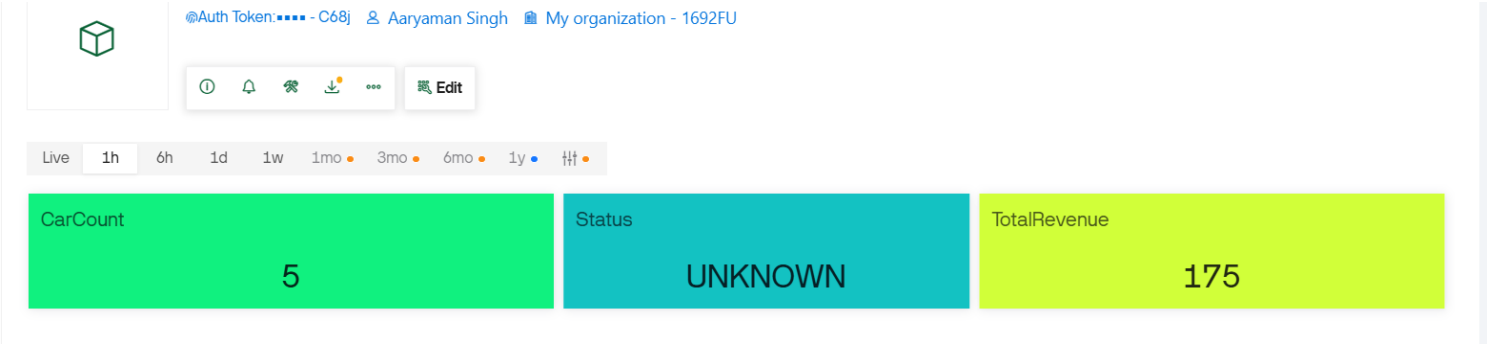

Figure 12: Deigned Model/Prototype

9. Learning outcomes (What I have learnt):

- Gained understanding of IoT system design using the NodeMCU ESP8266 for controlling and connecting devices.
- Acquired knowledge of vehicle identification using the RFID RC522 Module for fast and accurate toll processing.
- Developed skills in interfacing hardware components such as sensors, LCD display, and servo motor with a microcontroller.
- Learned to implement automation for gate control based on vehicle detection and validation conditions.
- Understood how to perform real-time monitoring and control using the Blynk IoT App in an IoT environment.