Worksheet 1

Student Name: Aaryaman Singh
UID: 24MCA20449
Branch: MCA / UIC
Section/Group: 3-A
Semester: 4th
Date of Performance: 19/01/2026
Subject Name: Internet of Things Labs
Subject Code: 24CAP-751

1. Aim/Overview of the practical:

Interface an Arduino Uno with Led and follow the certain cases. Use 6 Led and Name them L1 to L6.

a) Turn ON LEDs one-by-one from L1 to L6, each with a 300ms delay.
b) Create a chasing effect from L1 to L6 and back to L1.
c) Alternate between (L1, L2), (L3, L4), and (L5, L6) with 2 seconds delay.

2. Apparatus (For applied/experimental sciences/materials based labs):

Hardware Requirements

- Arduino Uno
- Breadboard
- 6 LEDs
- Connecting wires

Software requirements

- Tinkercad Circuits
- Arduino programming environment

3. Circuit Diagram(TinkerCad):

Case 1: Turn ON LEDs one-by-one from L1 to L6, each with a 300ms delay.

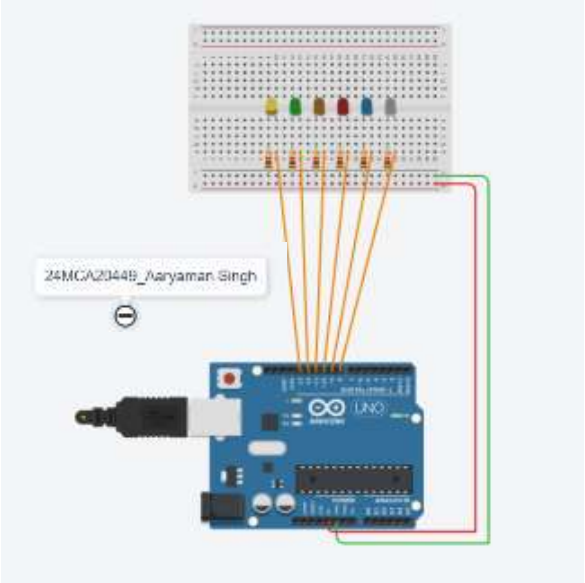

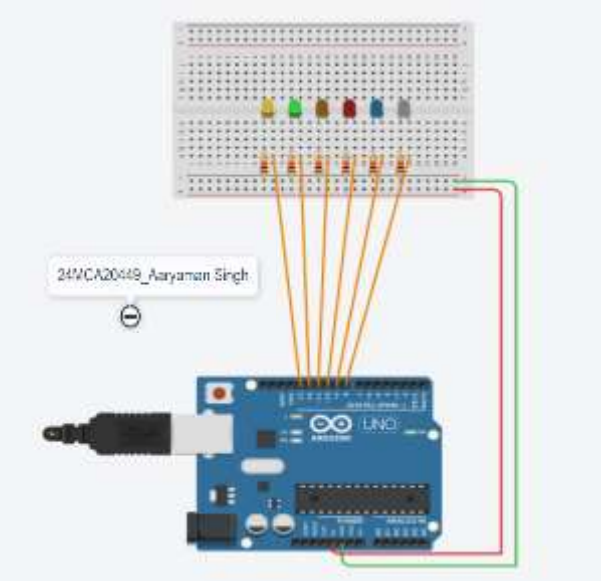

Case 2: Create a chasing effect from L1 to L6 and back to L1.

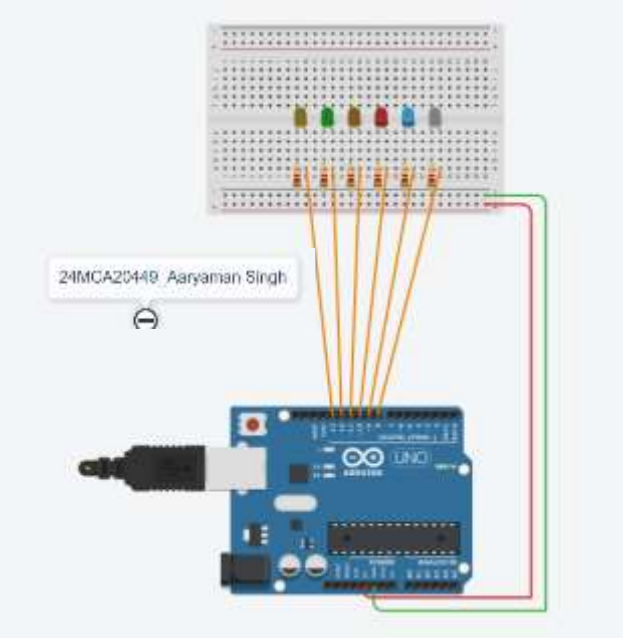

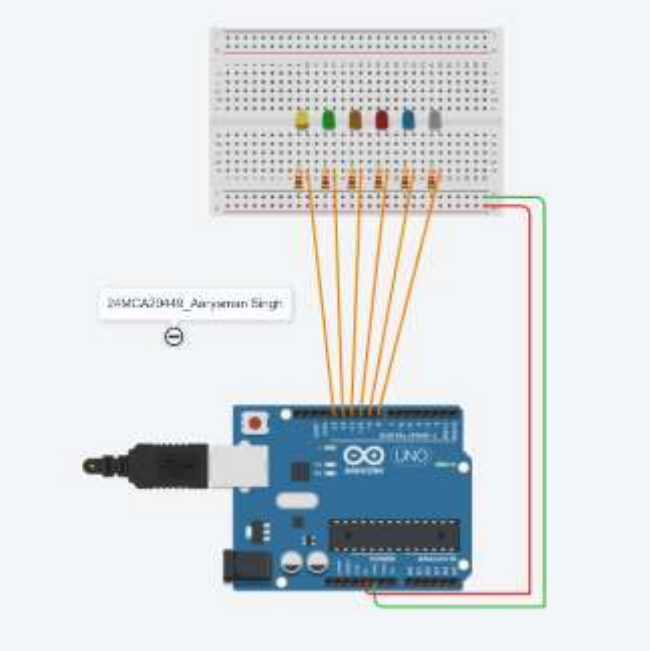

Case 3: Alternate between (L1, L2), (L3, L4), and (L5, L6) with 2 seconds delay.

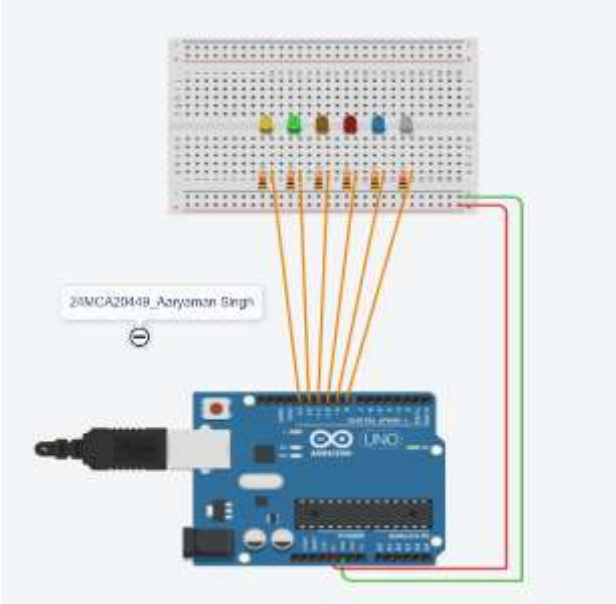

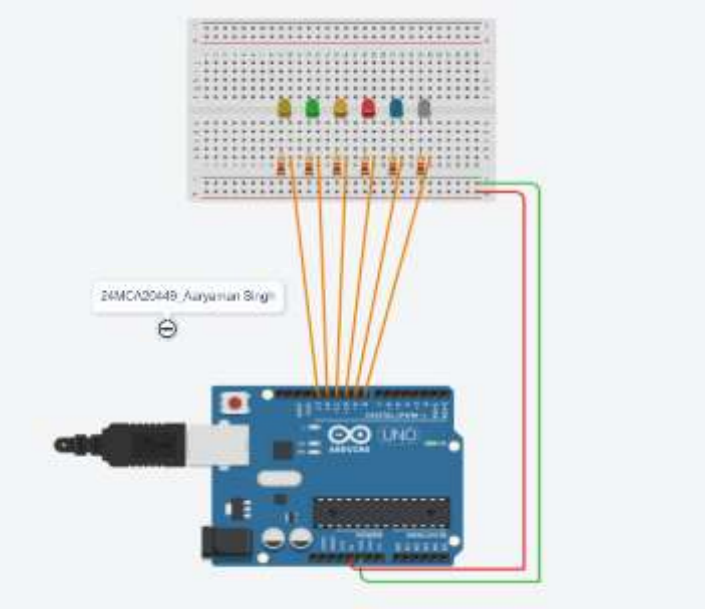

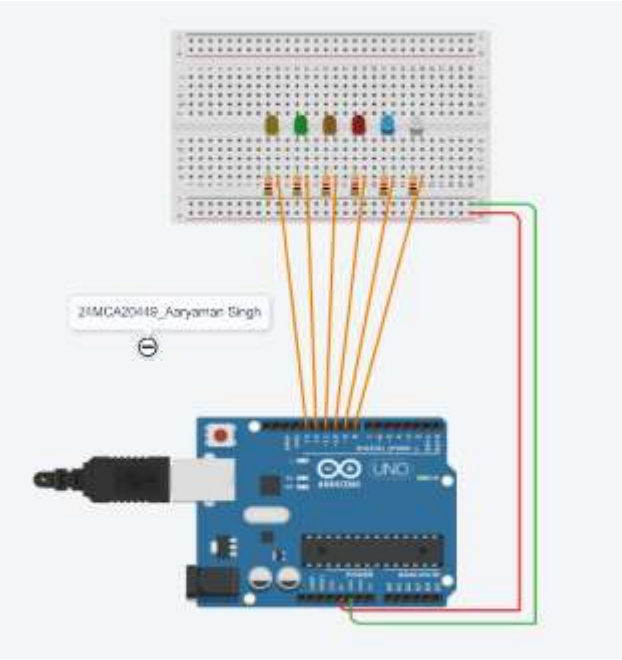

4. Coding:

(1) Turn ON LEDs one-by-one from L1 to L6, each with a 300ms delay.

```
 void setup() {
  pinMode(13, OUTPUT);    // L1
  pinMode(12, OUTPUT);    // L2
  pinMode(11, OUTPUT);    // L3
  pinMode(10, OUTPUT);    // L4
  pinMode(9, OUTPUT);     // L5
  pinMode(8, OUTPUT);     // L6
}

void loop() {

  digitalWrite(13, 1);
  delay(300);

  digitalWrite(12, 1);
  delay(300);

  digitalWrite(11, 1);
  delay(300);

  digitalWrite(10, 1);
  delay(300);

  digitalWrite(9, 1);
  delay(300);

  digitalWrite(8, 1);
  delay(300);
}
```

(2) Create a chasing effect from L1 to L6 and back to L1.

```
void setup() {
  pinMode(13, OUTPUT);      // L1
  pinMode(12, OUTPUT);      // L2
  pinMode(11, OUTPUT);      // L3
  pinMode(10, OUTPUT);      // L4
  pinMode(9, OUTPUT);       // L5
  pinMode(8, OUTPUT);       // L6
}

void loop() {

  // L1 to L6
  digitalWrite(13, 1);
  delay(300);
  digitalWrite(13, 0);

  digitalWrite(12, 1);
  delay(300);
  digitalWrite(12, 0);

  digitalWrite(11, 1);
  delay(300);
  digitalWrite(11, 0);

  digitalWrite(10, 1);
  delay(300);
  digitalWrite(10, 0);

  digitalWrite(9, 1);
  delay(300);
  digitalWrite(9, 0);

  digitalWrite(8, 1);
  delay(300);
  digitalWrite(8, 0);
```

```
  // L5 back to L1
  digitalWrite(9, 1);
  delay(300);
  digitalWrite(9, 0);

  digitalWrite(10, 1);
  delay(300);
  digitalWrite(10, 0);

  digitalWrite(11, 1);
  delay(300);
  digitalWrite(11, 0);

  digitalWrite(12, 1);
  delay(300);
  digitalWrite(12, 0);

  digitalWrite(13, 1);
  delay(300);
  digitalWrite(13, 0);
}
```

(3) Alternate between (L1, L2), (L3, L4), and (L5, L6) with 2 seconds delay.

```
void setup() {
  pinMode(13, OUTPUT);     // L1
  pinMode(12, OUTPUT);     // L2
  pinMode(11, OUTPUT);     // L3
  pinMode(10, OUTPUT);     // L4
  pinMode(9, OUTPUT);      // L5
  pinMode(8, OUTPUT);      // L6
}

void loop() {

  // L1 & L2
  digitalWrite(13, 1);
  digitalWrite(12, 1);
  delay(2000);
```

```
  digitalWrite(13, 0);
  digitalWrite(12, 0);

  // L3 & L4
  digitalWrite(11, 1);
  digitalWrite(10, 1);
  delay(2000);
  digitalWrite(11, 0);
  digitalWrite(10, 0);

  // L5 & L6
  digitalWrite(9, 1);
  digitalWrite(8, 1);
  delay(2000);
  digitalWrite(9, 0);
  digitalWrite(8, 0);
}
```

5. Learning outcomes (What I have learnt):

1. Learned how to interface an Arduino Uno with multiple LEDs using digital output pins**.**

2. Understood how to control LEDs in different sequences using the digitalWrite() and delay() functions.

3. Gained practical experience in creating LED patterns such as one-by-one glowing, chasing effect, and alternate pair blinking

4. Improved understanding of timing control in Arduino by using different delay values for various LED operations.

5. Developed basic logic-building skills for implementing sequential and pattern-based output using an Arduino program.