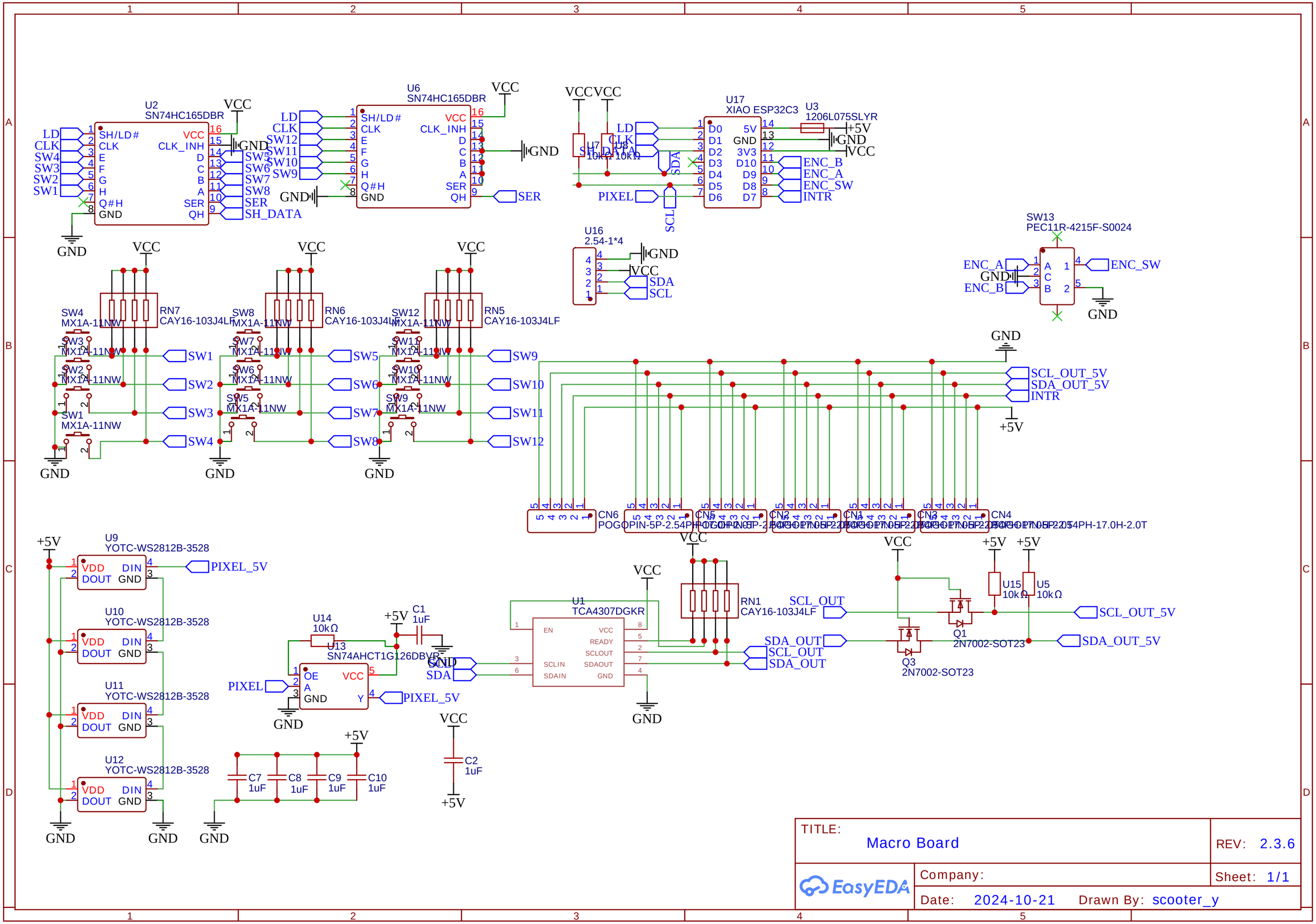
U2
SN74HC165DBR
U6
SN74HC165DBR
U17
XIAO ESP32C3
U3
1206L075SLYR
U7
10kΩ
U8
10kΩ
U16
2.54-1*4
SW13
PEC11R-4215F-S0024
SW4
MX1A-11NW
RN7
CAY16-103J4LF
SW8
MX1A-11NW
RN6
CAY16-103J4LF
SW12
MX1A-11NW
RN5
CAY16-103J4LF
SW3
MX1A-11NW
SW2
MX1A-11NW
SW1
MX1A-11NW
SW7
MX1A-11NW
SW6
MX1A-11NW
SW5
MX1A-11NW
SW11
MX1A-11NW
SW10
MX1A-11NW
SW9
MX1A-11NW
CN6
POGOPIN-5P-2.54PH-17.0H-2.0T
CN5
CN2
CN1
CN3
CN4
U9
YOTC-WS2812B-3528
U10
YOTC-WS2812B-3528
U11
YOTC-WS2812B-3528
U12
YOTC-WS2812B-3528
U14
10kΩ
U13
SN74AHCT1G126DBVR
C1
1uF
U1
TCA4307DGKR
RN1
CAY16-103J4LF
Q1
2N7002-SOT23
Q3
2N7002-SOT23
U15
10kΩ
U5
10kΩ
C7
1uF
C8
1uF
C9
1uF
C10
1uF
C2
1uF
VCC
GND
+5V
LD
CLK
SW4
SW3
SW2
SW1
SW12
SW11
SW10
SW9
SH_DATA
SER
SDA
SCL
PIXEL
PIXEL_5V
ENC_B
ENC_A
ENC_SW
INTR
SCL_OUT_5V
SDA_OUT_5V
SCL_OUT
SDA_OUT
TITLE:
Macro Board
REV: 2.3.6
Company:
Sheet: 1/1
Date: 2024-10-21
Drawn By: scooter_y
EasyEDA