ANALOG STAGE

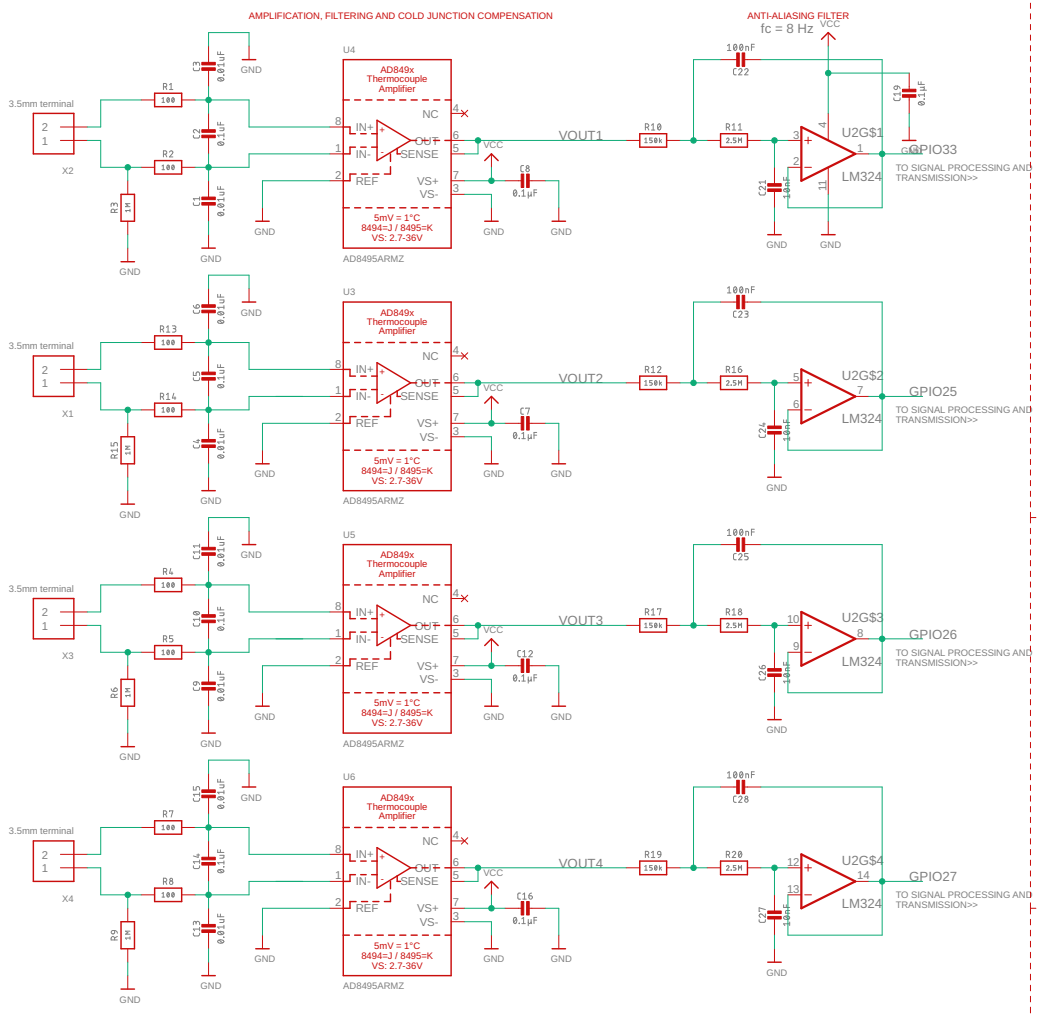

SIGNAL PROCESSING AND TRANSMISSION

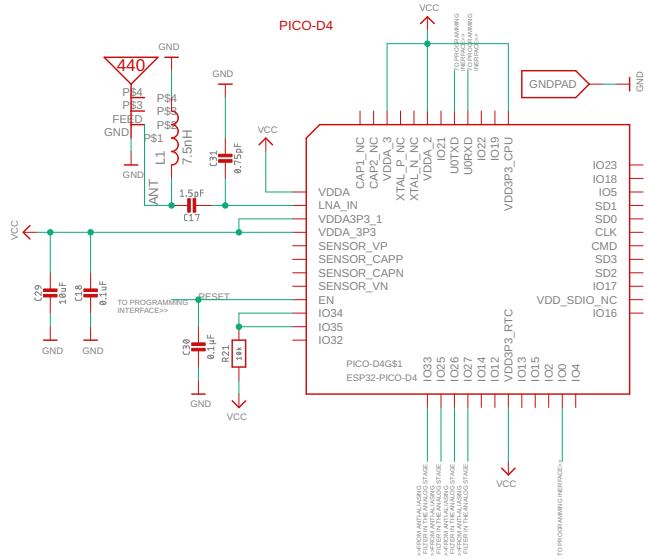

PROGRAMMING INTERFACE

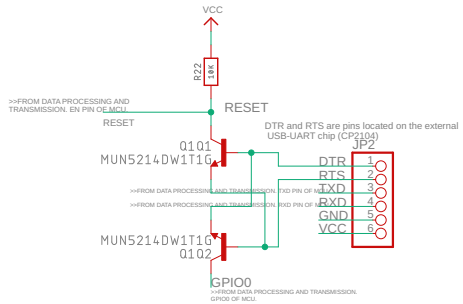

UPDATES:

- AA (12/26/2019): Some capacitors were 0603's. Updated to make them all 0805.

- AA(12/27/2019): Added some descriptions in some of the function blocks along with organizing the pin labels on the ESP32.

- AA(12/29/2019): Added a pull-down resistor to GPIO's 34 & 35 to reduce potential EMI as they are unused input pins. Also added TO/FROM labels to a number of pins.

-AA(12/30/2019): Added a 3.3V LDO to the power circuit.

-AA(1/8/2020): Added bypass capacitor to Op-Amp and another bypass capacitor (10uF) to the MCU.

-AA(2/9/2020): Added GND and VCC legs to the programming interface header

-AA(2/11/2020): Went from 4 mounting holes to 3 and changed from M4 to M3 holes

POWER

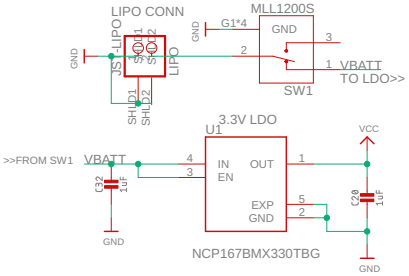

Safran Project	Created: Austin Asher
	12/30/2019
	Version: 1.7
	Sheet: 1/1