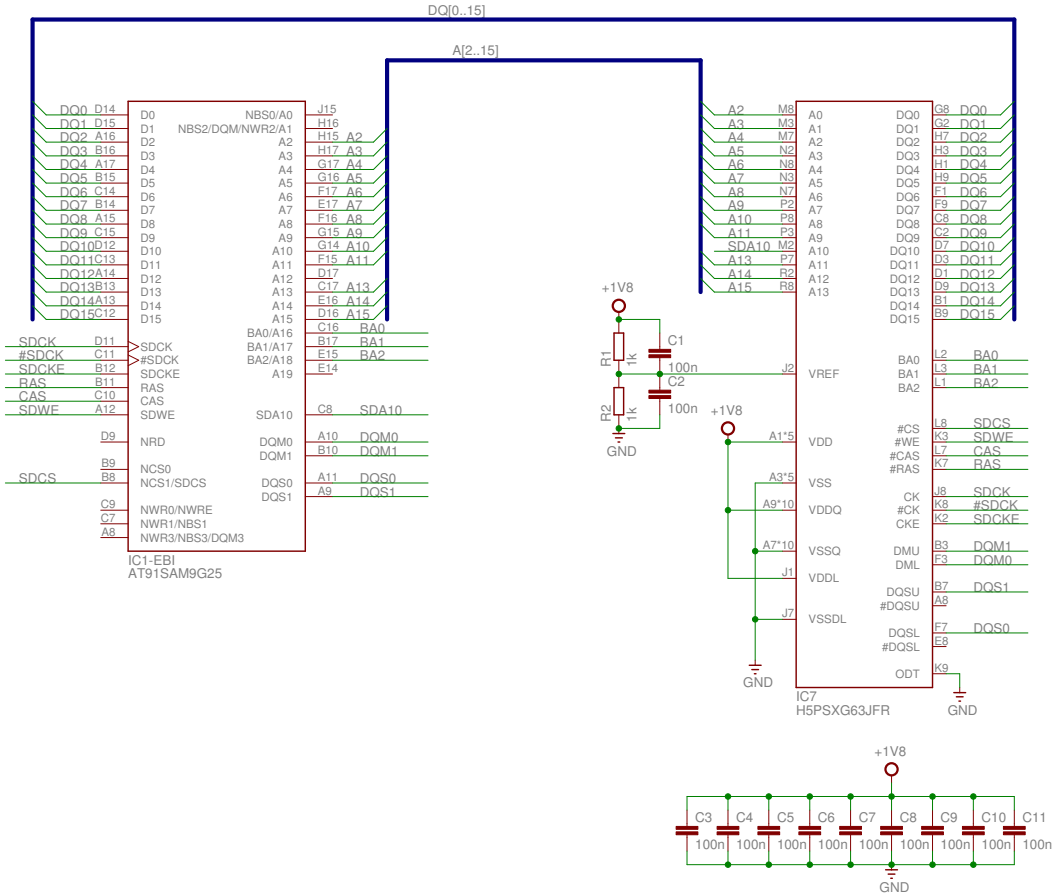

sam9g25	
04.11.14 23:52	
Sheet: 1/3	

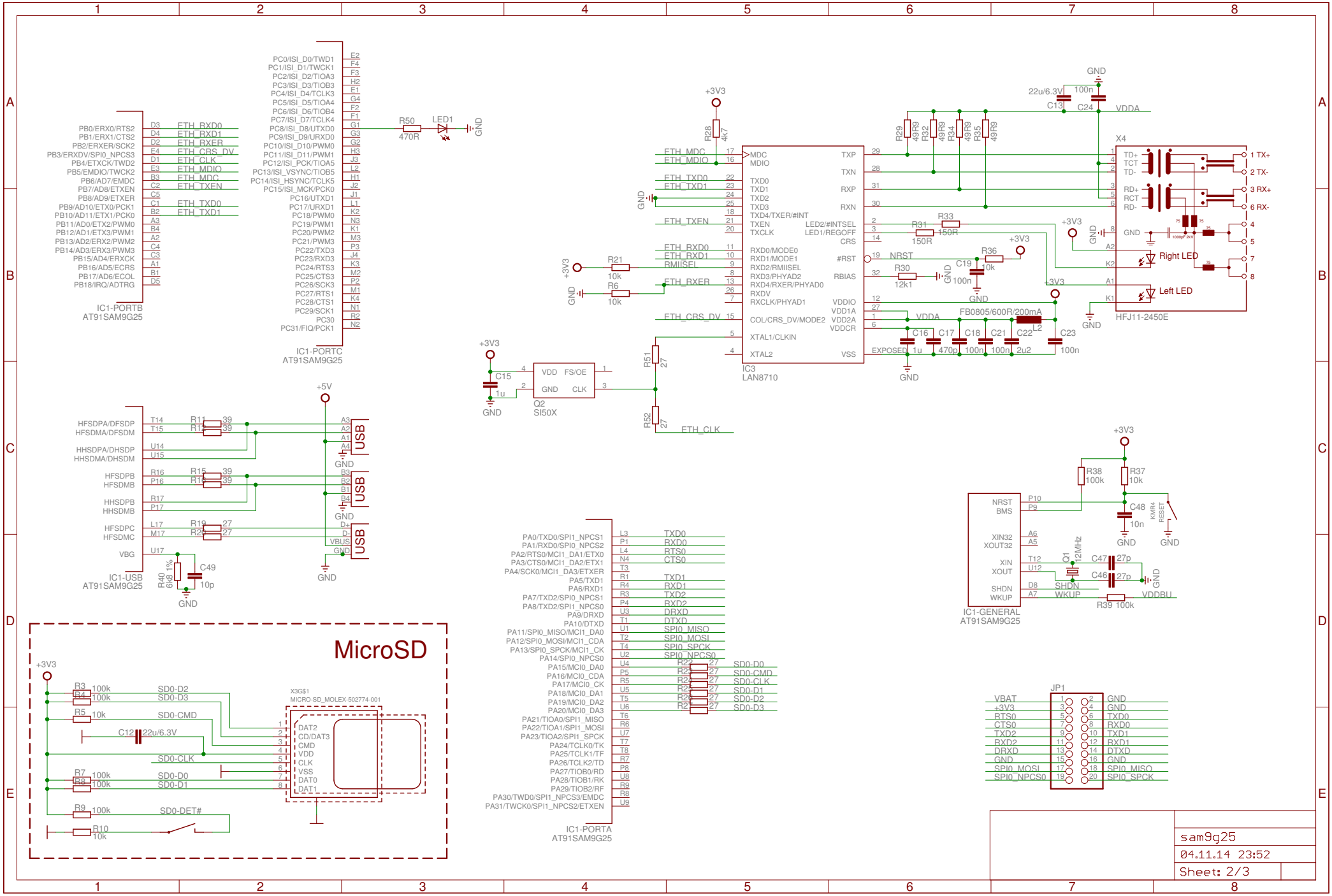
IC1-PORTB
AT91SAM9G25
IC1-PORTC
AT91SAM9G25
R50
470R
LED1
GND
+3V3
R28
4k7
ETH_MDC
ETH_MDIO
ETH_TXD0
ETH_TXD1
ETH_TXEN
ETH_RXD0
ETH_RXD1
RMIISEL
ETH_RXER
ETH_CRS_DV
ETH_CLK
R21
10k
R6
10k
IC3
LAN8710
X4
HFJ11-2450E
Right LED
Left LED
VDDA
FB0805/600R/200mA
L2
+5V
IC1-USB
AT91SAM9G25
USB
R40
6k8 1%
C49
10p
Q2
SI50X
C15
1u
R51
27
R52
27
IC1-PORTA
AT91SAM9G25
IC1-GENERAL
AT91SAM9G25
Q1
12MHz
R39 100k
VDDBU
MicroSD
X3G$1
MICRO-SD_MOLEX-502774-001
SD0-DET#
JP1
sam9g25
04.11.14 23:52
Sheet: 2/3

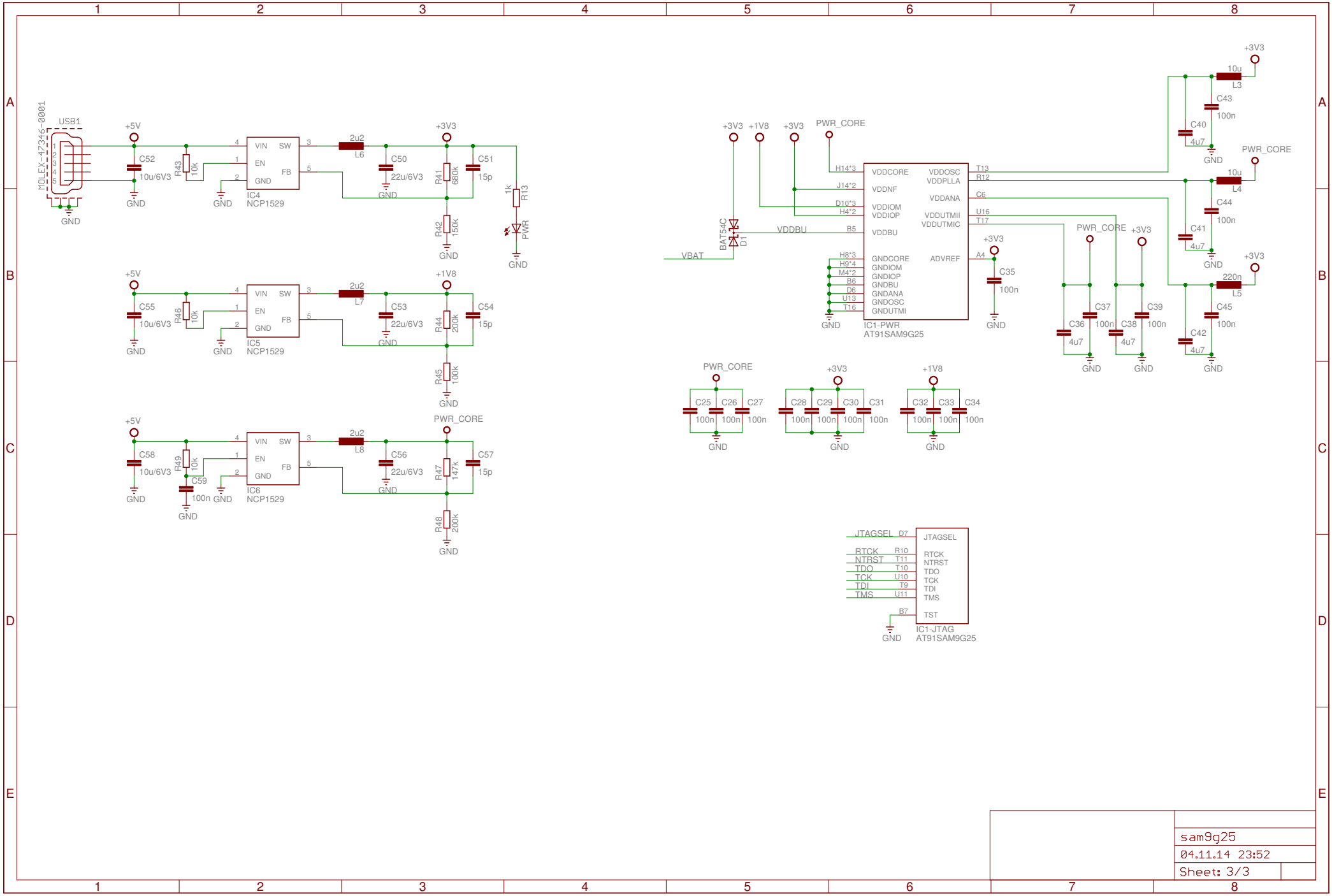

sam9g25

04.11.14 23:52

Sheet: 3/3