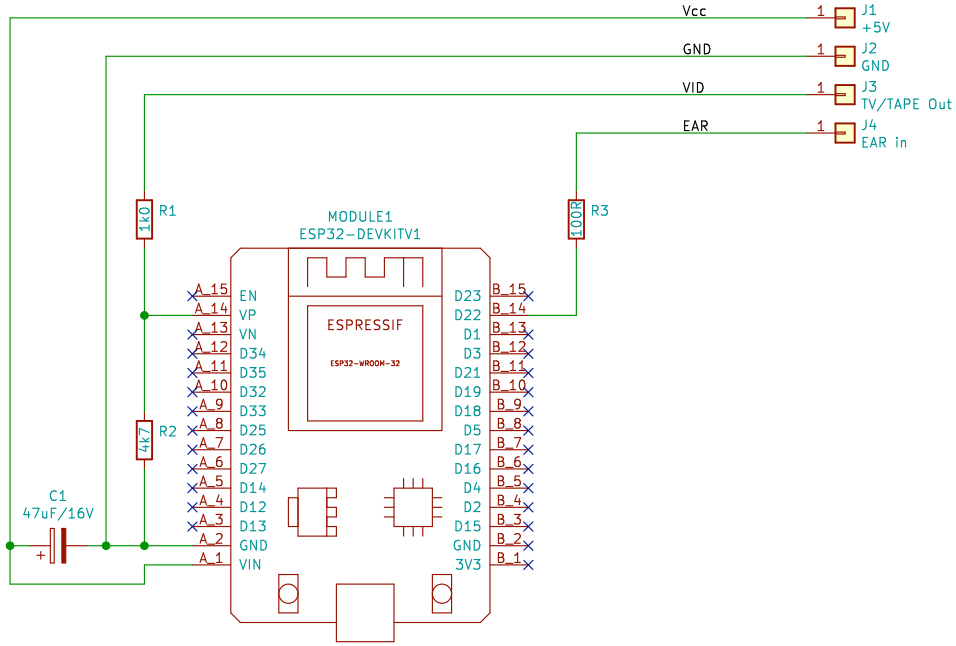

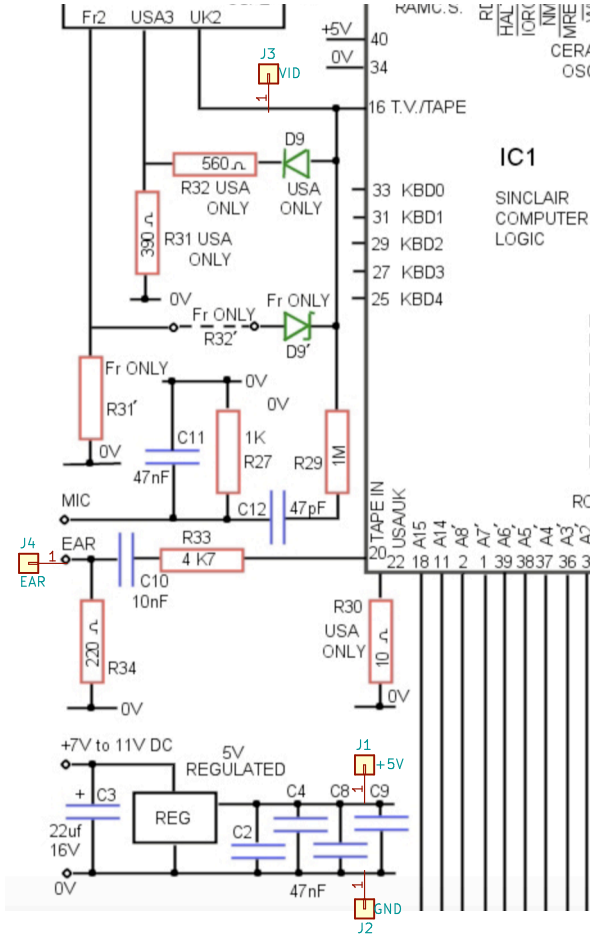

Firmware and cource by holmatic:
https://github.com/holmatic/zx-iot-mi

ZX-WESPI Firmware locations:
1. partition-table.bin @ 0x8000
2. ota_data_initial.bin. @ 0xD000
3. bootloader.bin @ 0x1000
4. zx_iot.bin @ 0x10000

Sheet: /
File: 2020.18 ZX-WESPI.sch

Title: ZX-WESPI by ZXTeam

Size: A4	Date: 2020-12-18	**Rev: 0.2**
KiCad E.D.A. kicad (5.1.6-0-10_14)		Id: 1/1