Parameter Estimation and Simulation of Bacteriophage Infection Model

Abigail Ballard, Dr. Dustin Edwards, Dr. Keith Emmert

SEA PHAGES

Texas Academy of Science
February 28th, 2020

TARLETON STATE UNIVERSITY
Member of The Texas A&M University System

Projected Prognosis

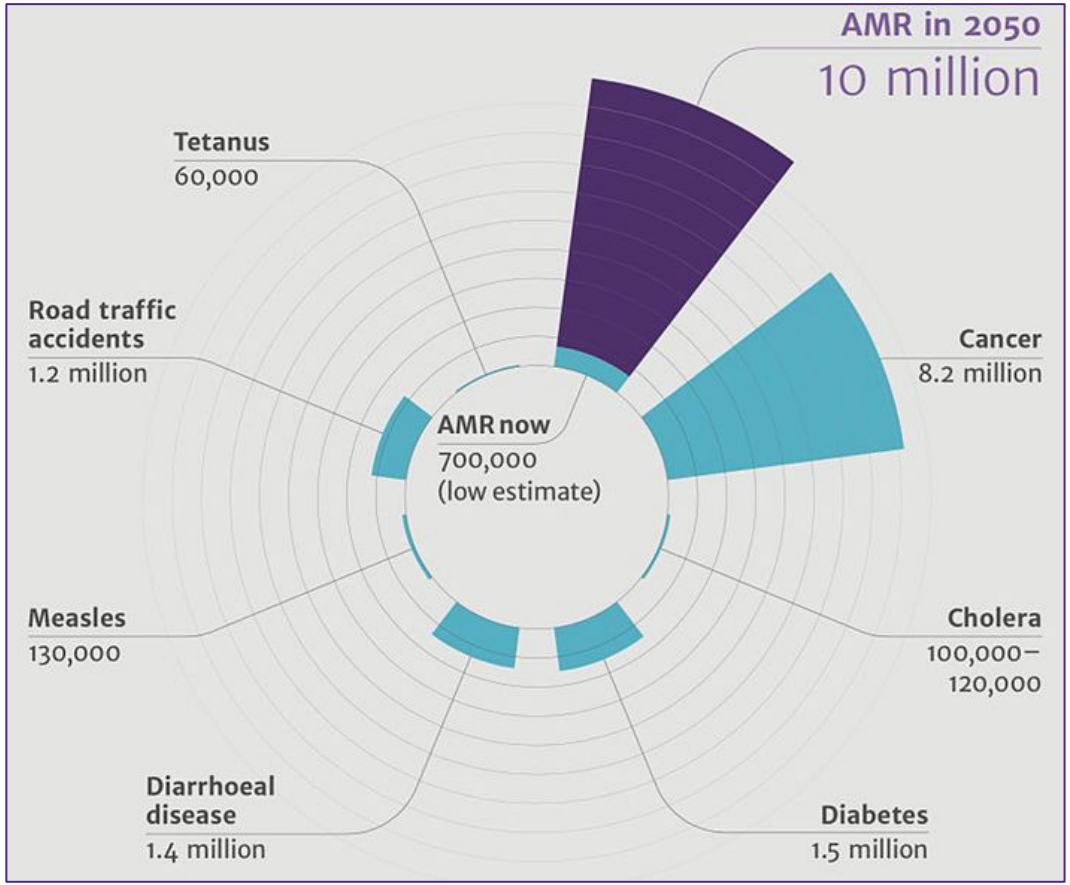

2020

- **700,000 deaths** from **AMR** infections

2030

- **24 million** people forced into **extreme poverty**

2050

- **10 Million deaths** from **AMR**
- Economic damage akin to 2008-2009 **global financial crisis**

Bacteriophage Background

Bacteriophages

- **Viruses** that infect **bacteria**
- Estimated **10^{31}** bacteriophages in the biosphere

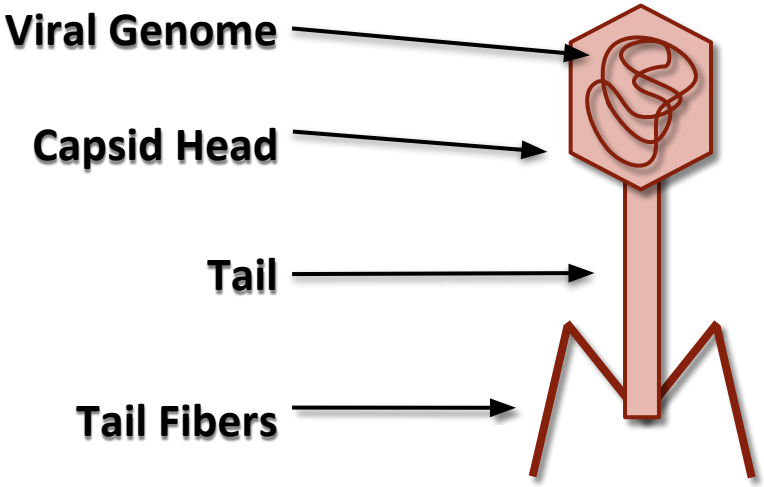

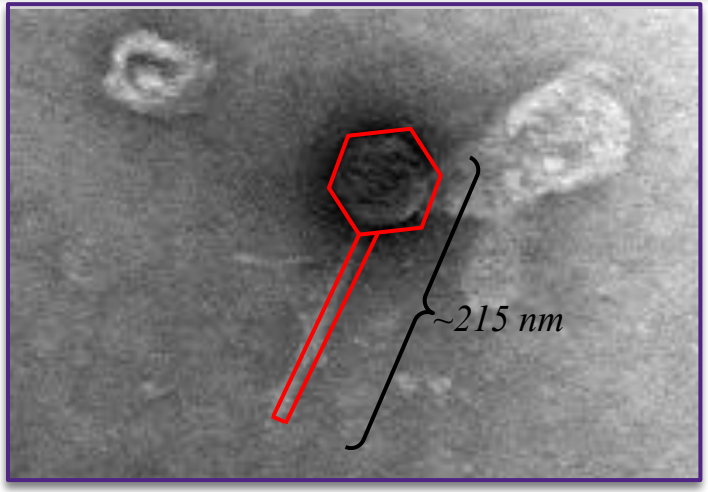

*TEM Scan of Microbacterium Phage **Finny***

Bacteriophage Background

Bacteriophages

- Two infection types: **Lytic** and **Lysogenic**
- **Lysogenic** bacteriophages become **reservoir** hosts
- **Lytic** bacteriophages **produce more** bacteriophages
- Infectious bacteriophage particles called virions

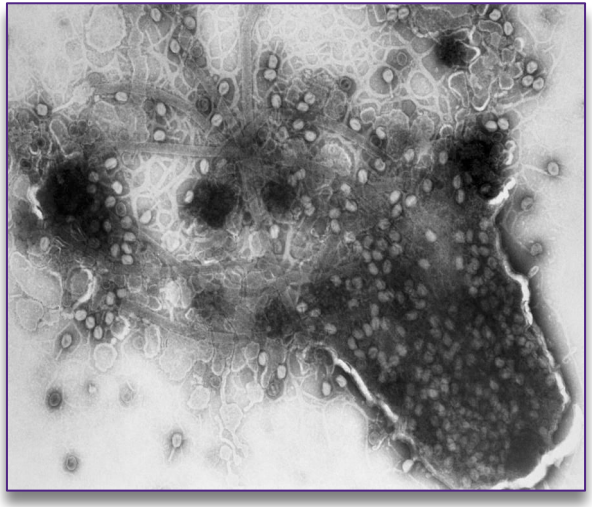

*Bacteriophage **T4** in a lytic infection lysing, and subsequently killing, **E. coli***

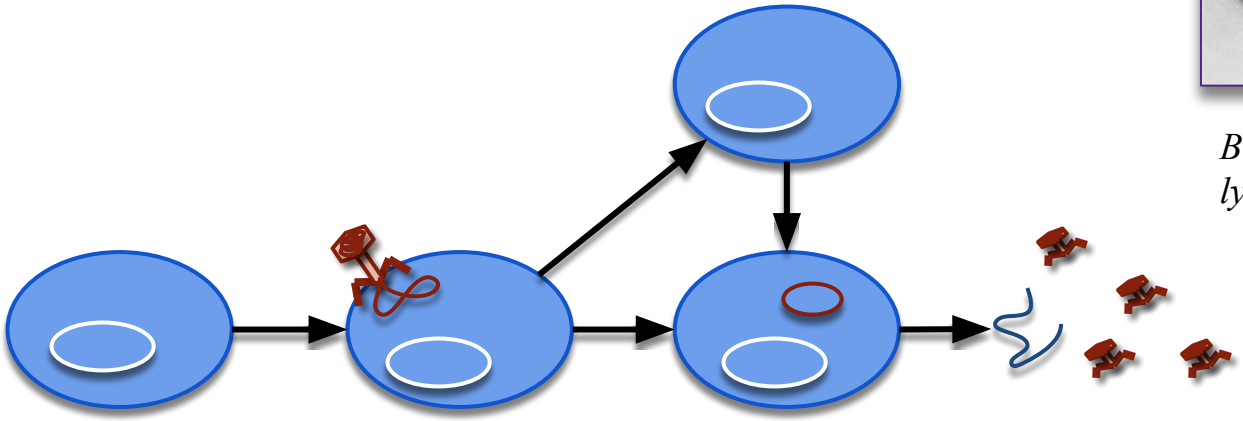

Compartmental Diagram

S - Susceptible bacteria

C - Circularized phage genome, choose between lytic and lysogenic infection

I - Lytic bacteria

R - Lysogenic reservoir bacteria

V - Virions created

α - Infection rate

β - Infected to lytic

γ - Infected to lysogenic

ε - Lysogenic to lytic

μ - Death rate of a class

rS - Replication rate of the S class

rR - Replication rate of the R class

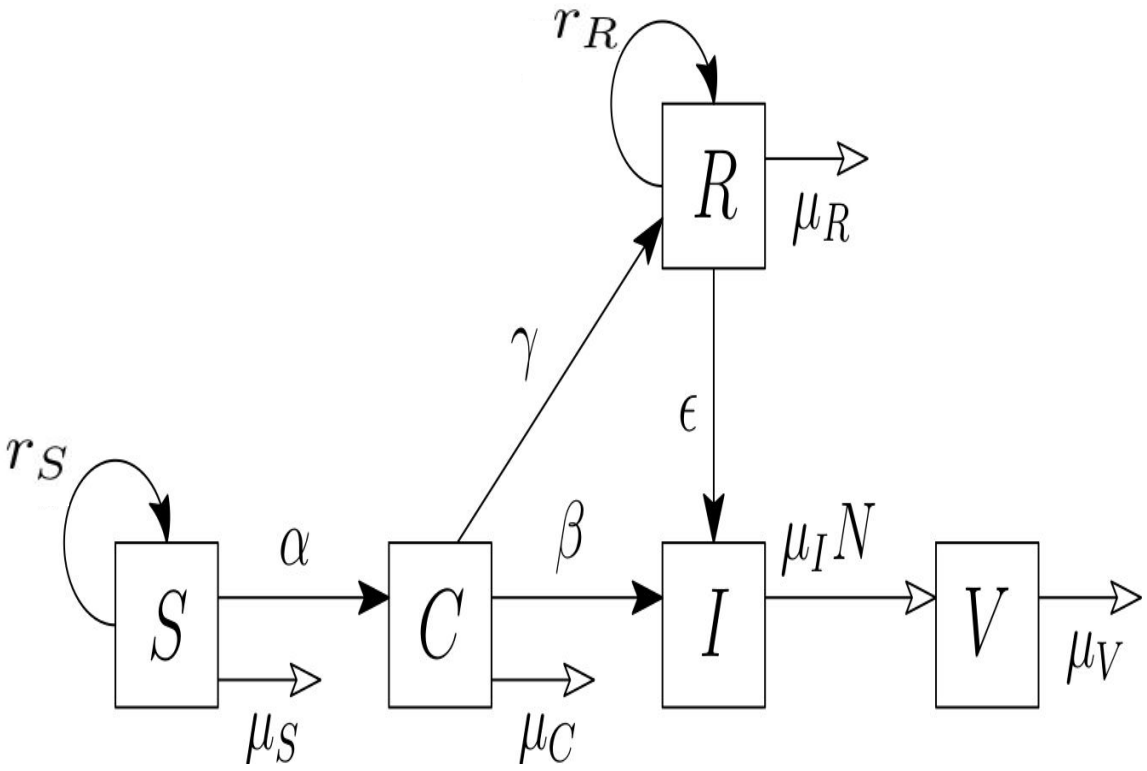

System of Differential Equations

$$\frac{dS}{dt} = r_S S\left(1 - \frac{S + C + I + R}{\mathbb{K}}\right) - \mu_S S - \alpha SV$$

$$\frac{dC}{dt} = \alpha SV - (\mu_C + \beta + \gamma)C$$

$$\frac{dI}{dt} = \beta C - \mu_I I + \epsilon R$$

$$\frac{dR}{dt} = r_R R\left(1 - \frac{S + C + I + R}{\mathbb{K}}\right) + \gamma C - (\epsilon + \mu_R)R$$

$$\frac{dV}{dt} = \mu_I N I - \mu_V V - \alpha SV.$$

Search for Stability: Extinction

Theorem 1 (Extinction Stability for Constant Carrying Capacity, One Phage Only). *The extinction equilibrium is locally asymptotically stable provided*

$$r_S < \mu_S \quad \textit{and} \quad r_R < \mu_R + \epsilon.$$

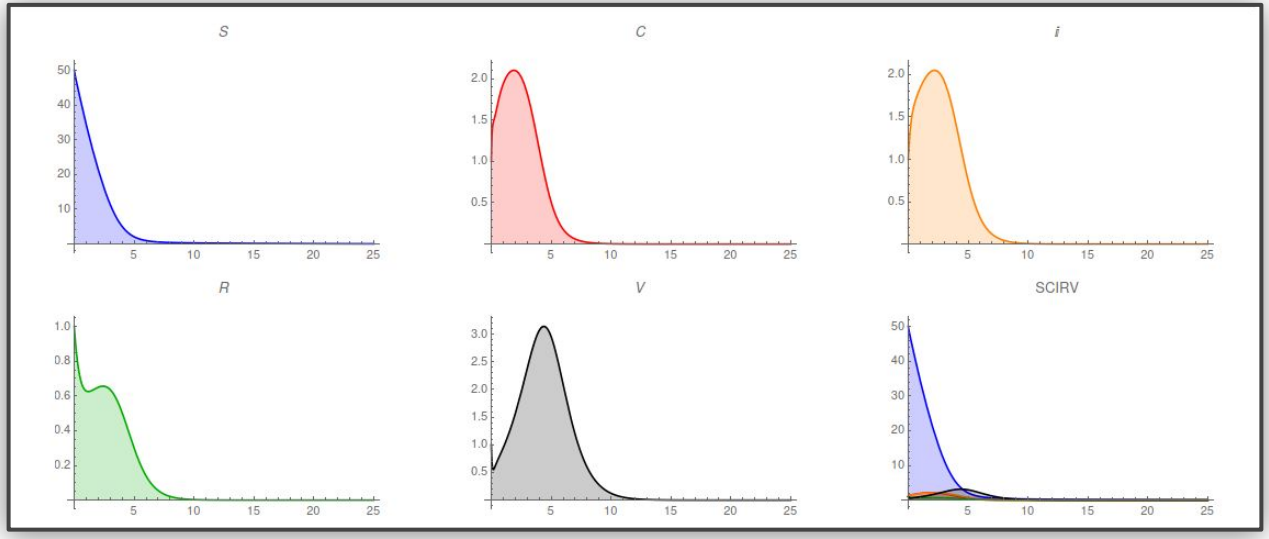

Search for Stability: Bacterial Survival

Theorem 2 (Stability of $(\bar{S}, 0, 0, 0, 0)$ for Constant Carrying Capacity, One Phage Only). *Suppose $r_S > \mu_S$ so that $\bar{S} = \dfrac{\mathbb{K}(r_S - \mu_S)}{r_S} > 0$. Further assume that $\mu_V > N\mu_I$. Then, a sufficient criteria for local asymptotic stability is*

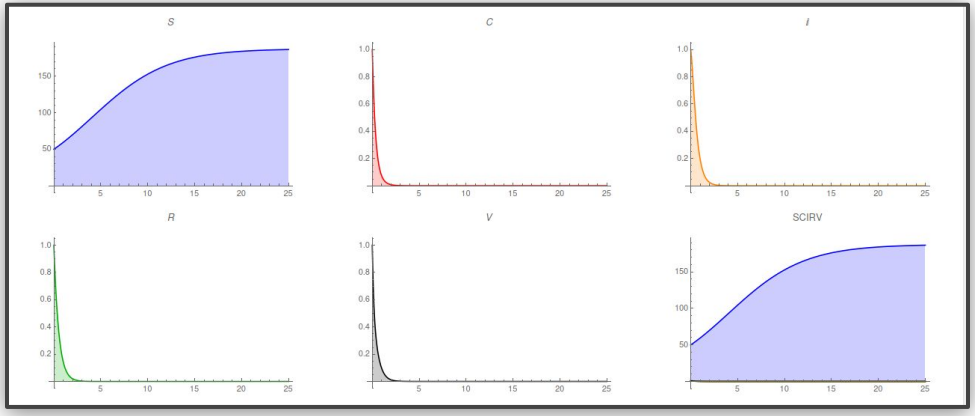

$$\alpha < \min\left\{\frac{\beta + \gamma + \mu_C}{\bar{S}}, \mu_V - N\mu_I\bar{S}\right\}$$

$$\mu_I > \beta + \epsilon$$

$$\gamma < \epsilon + \mu_R - \frac{\mu_S r_R}{r_S}.$$

Search for Stability: IRV Survival

Theorem 3 (Stability Criterion for IRV Equilibrium for Constant Carrying Capacity, One Phage Only). *Assume* $r_R > \mu_R + \epsilon$. *The equilibrium*

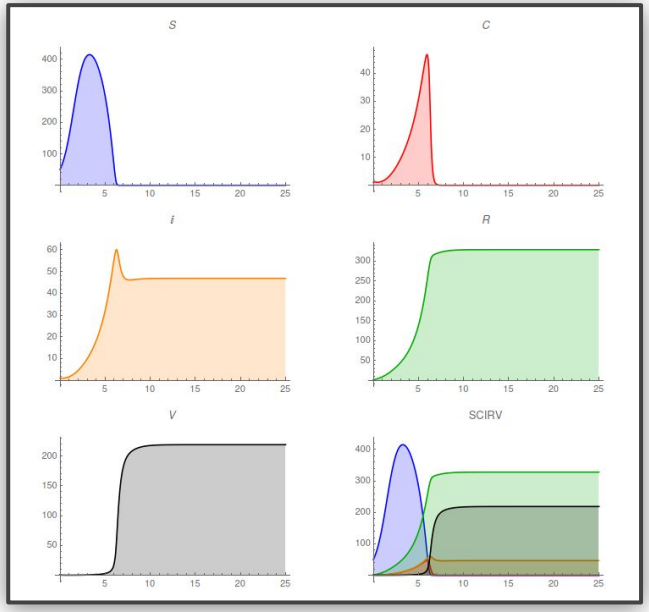

$$(\bar{S}, \bar{C}, \bar{I}, \bar{R}, \bar{V}) = \left(0, 0, \frac{\epsilon \bar{R}}{\mu_I}, \bar{R}, \frac{N \epsilon \bar{R}}{\mu_V}\right),$$

$$\bar{R} = \frac{\mathbb{K} \mu_I (r_R - \epsilon - \mu_R)}{r_R(\epsilon + \mu_I)}$$

is locally asymptotically stable provided

$$r_S < \frac{r_R(\alpha \bar{V} + \mu_S)}{\epsilon + \mu_R} \qquad \textit{and} \qquad r_R > \mu_R - \mu_I.$$

Future Directions

Brauer Theorem

- Ovals of Cassini
- Finding more strict restrictions for S equilibrium

Bacteriophages in Competition

- A complex system of multiple phages interacting
- Models interactions similar to what is seen in medical applications

Future Directions

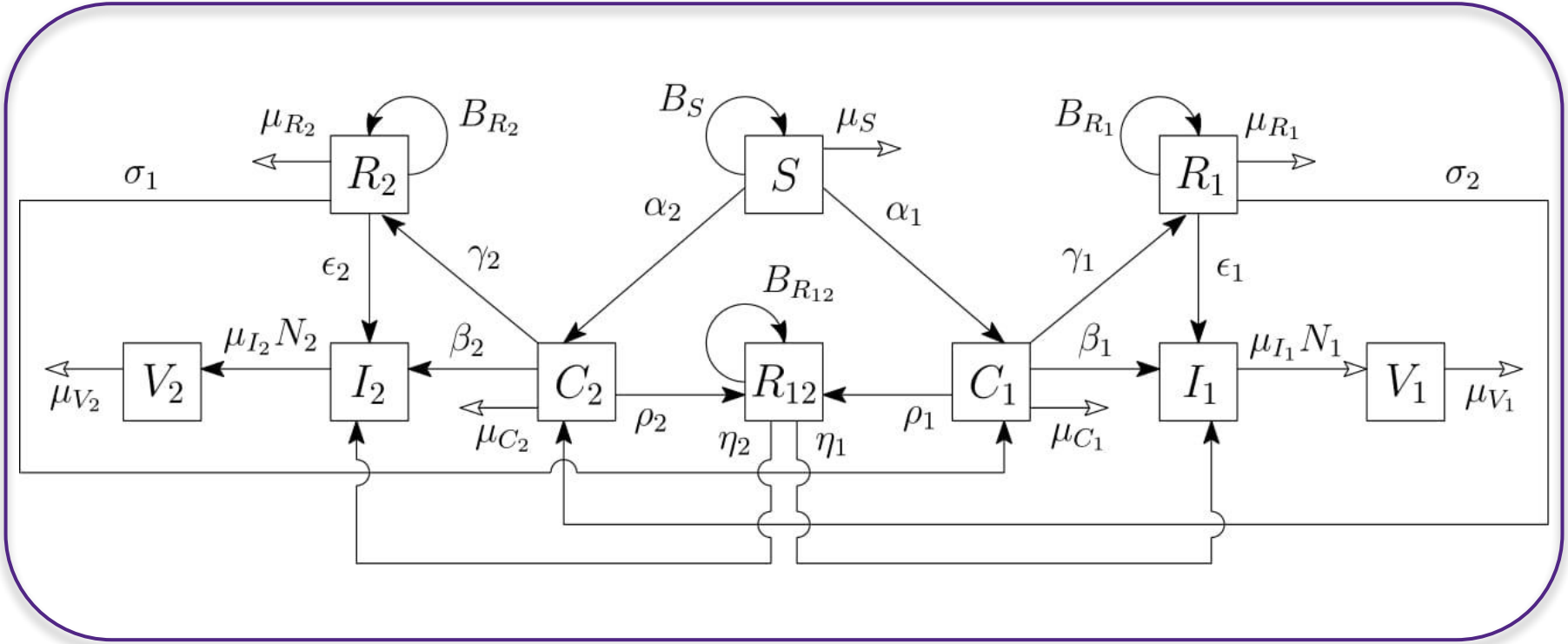

Acknowledgements

Support for this work was provided by Tarleton State University College of Science and Technology.

Thank You!

TARLETON
STATE UNIVERSITY
Member of The Texas A&M University System

Questions

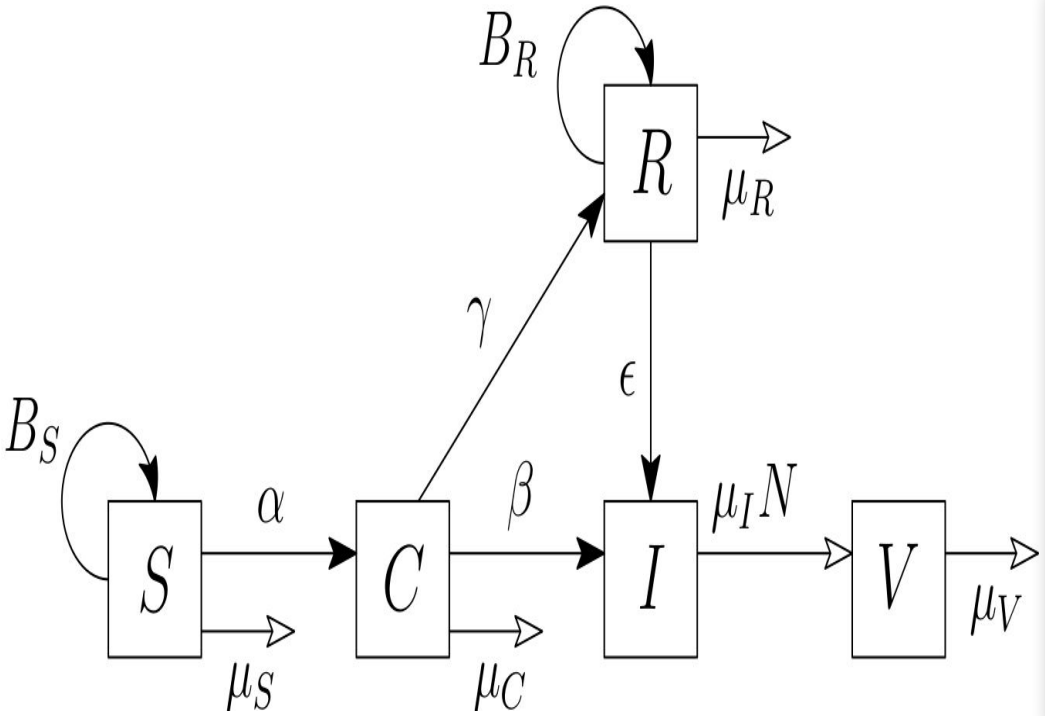
B_R
R
μ_R
γ
ϵ
B_S
S
α
C
β
I
$\mu_I N$
V
μ_V
μ_S
μ_C

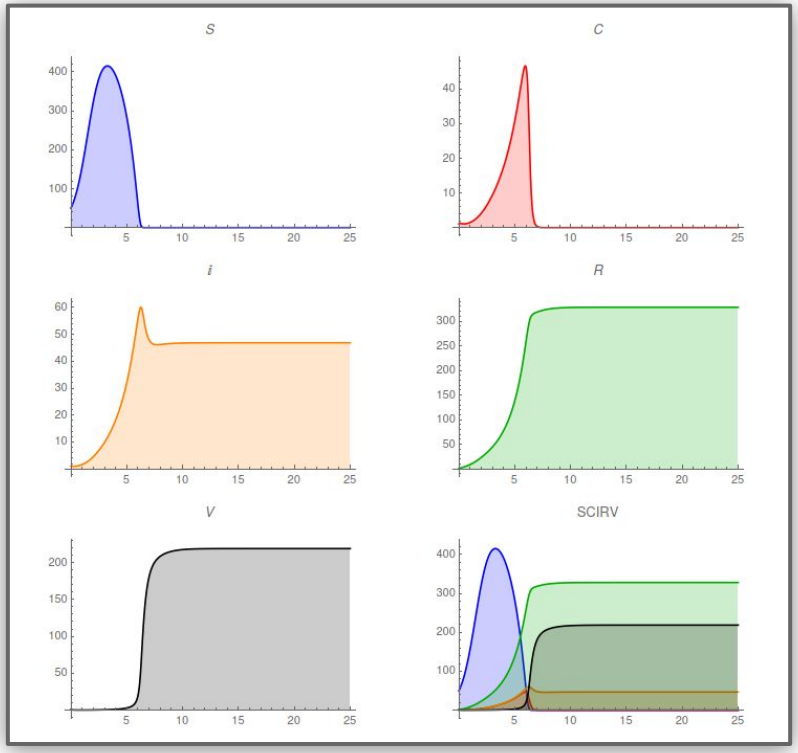
S
C
i
R
V
SCIRV