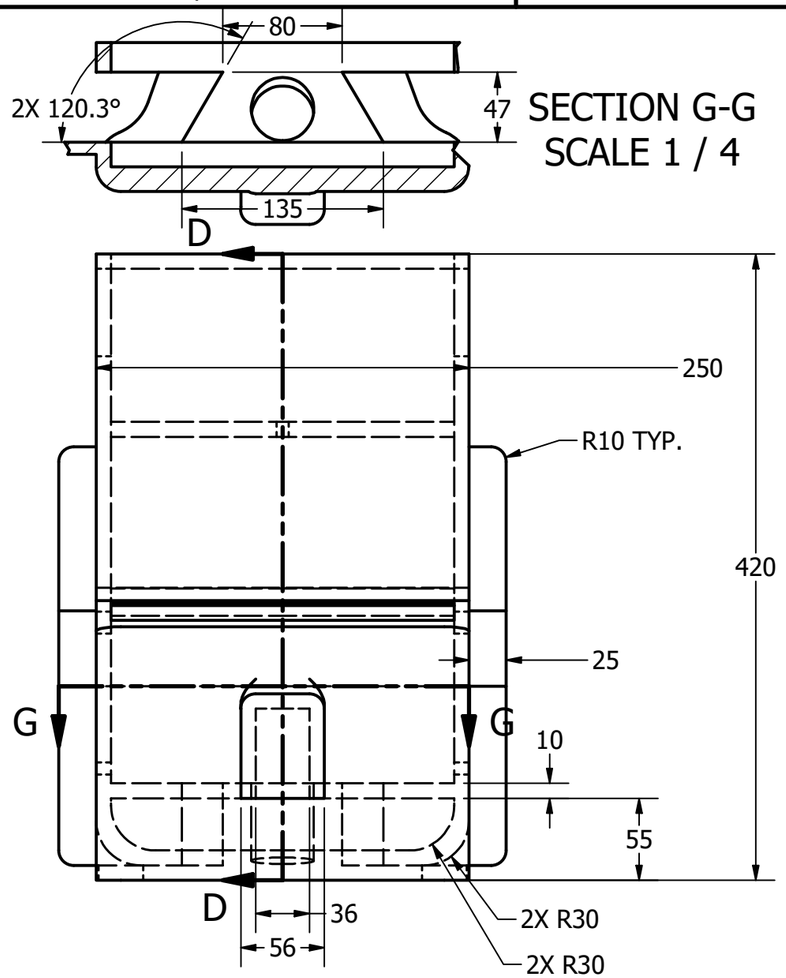

SECTION G-G
SCALE 1 / 4

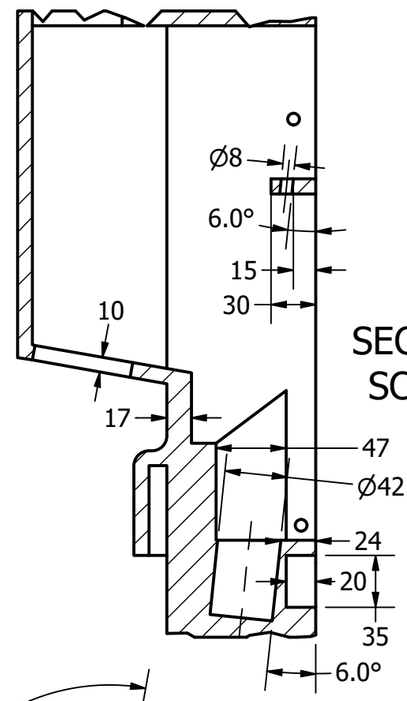

SECTION D-D
SCALE 1 / 4

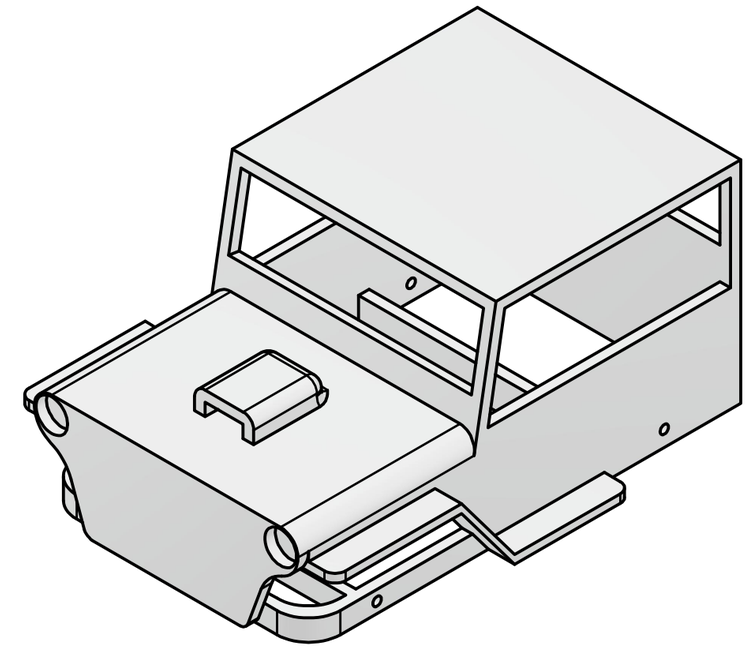

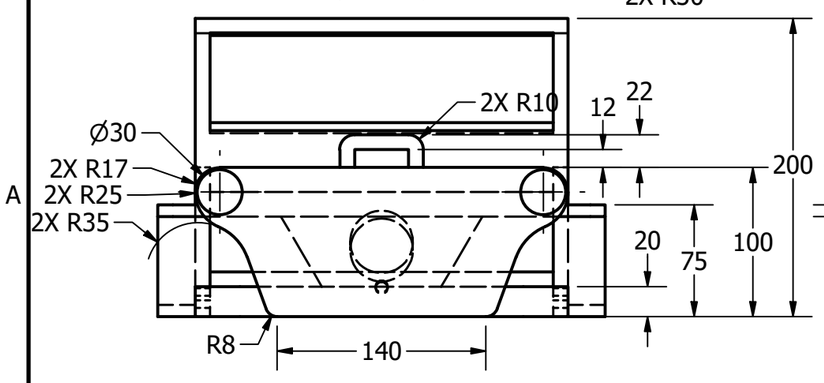

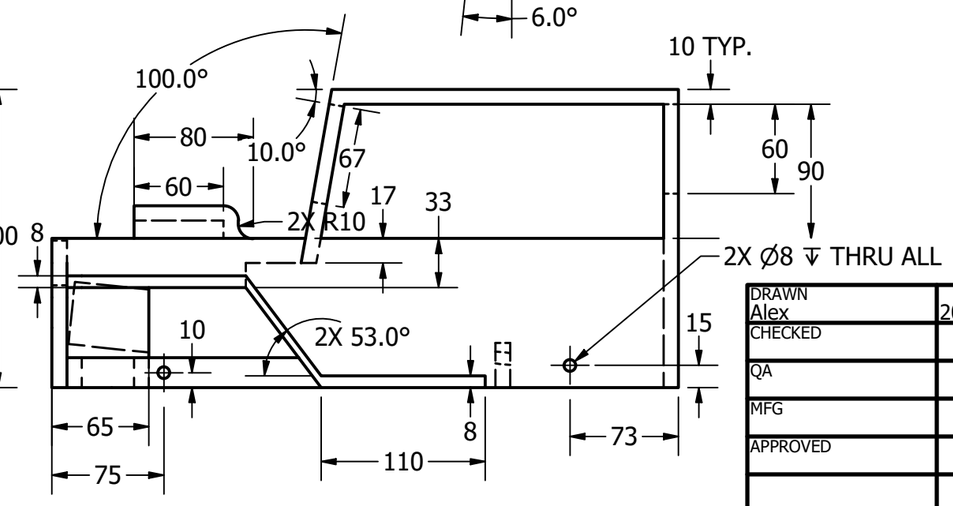

DRAWN Alex	2024-02-15	McMaster University
CHECKED		TITLE
QA		Shell/chassis
MFG		
APPROVED		
SIZE B	DWG NO shell - part no. 3	REV
SCALE 1 / 4	SHEET 3 OF 12	