BRISTOL SIDDELEY ENGINES LTD.

AERO ENGINE SCHOOL

ORPHEUS ENGINE

PROVISIONAL

NAME	
DATE	

001

BRISTOL SIDDELEY ENGINES LTD.

AERO ENGINE SCHOOL

FOREWORD

This book is issued by the Aero Engine School for the use of students attending the courses, and it contains sufficient information to supplement the course lectures, including that which will be of the most use when operating or servicing Bristol Siddeley Engines.

Whilst every care has been taken to ensure that it is up to date, it will be appreciated that continuous development and changing operating conditions, may render it necessary to make alterations from time to time. NO AMENDMENTS will be forwarded, therefore, all subsequent modifications that are introduced concerning the engine will be the responsibility of each student.

These notes, therefore, are not intended as a manual on the subject, but are issued as a guide and a valuable contribution to the lectures and instruction given at the Bristol Siddeley Engines Limited, Aero Engine School.

These notes should be checked frequently with current information in the Official Maintenance and Overhaul Manual, A.P.'s, A.M.O's, or A.R.B. publications.

Hours of attendance - Mondays to Fridays

MORNING	- 9.0 a.m. - 10.30 p.m.	11.0 a.m. - 12.45 p.m.
AFTERNOON	- 2.15 p.m. 3.15 p.m.	3.30 p.m. - 4.30 p.m.

No change in these times can be allowed without permission of the School Management.

BRISTOL SIDDELEY ENGINES LTD.

AERO ENGINE SCHOOL

GENERAL INDEX

1 GAS FLOW

2 LEADING PARTICULARS

3 FUEL SYSTEM

4 ENGINE

5 GROUND RUNNING

6 STORAGE

1. Air intake duct.
2. Starter exhaust port.
3. Front bearing seal breather outlet.
4. Oil tank vent pipe.
5. Oil tank.
6. Oil tank filler cap.
7. Oil tank drain valve.
8. Air bleed connection (aircraft services).
9. Igniter plug.
10. Fuel tank pressurisation bleed connection.
11. Jet pipe shroud.
12. Thermocouple.
13. Jet pipe temperature limiter.
14. Engine mounting trunnion (spherical).
15. Burner connector.
16. Combustion casing drain.
17. Bulkhead.
18. Oil return pipe.
19. Oil delivery pipe.
20. Combined control unit.
21. L.P. fuel filter.
22. Hydraulic pump location.
23. Fuel inlet connection.
24. Fuel low pressure warning switch.
25. Percentage tachometer generator.
26. Pitot heads.

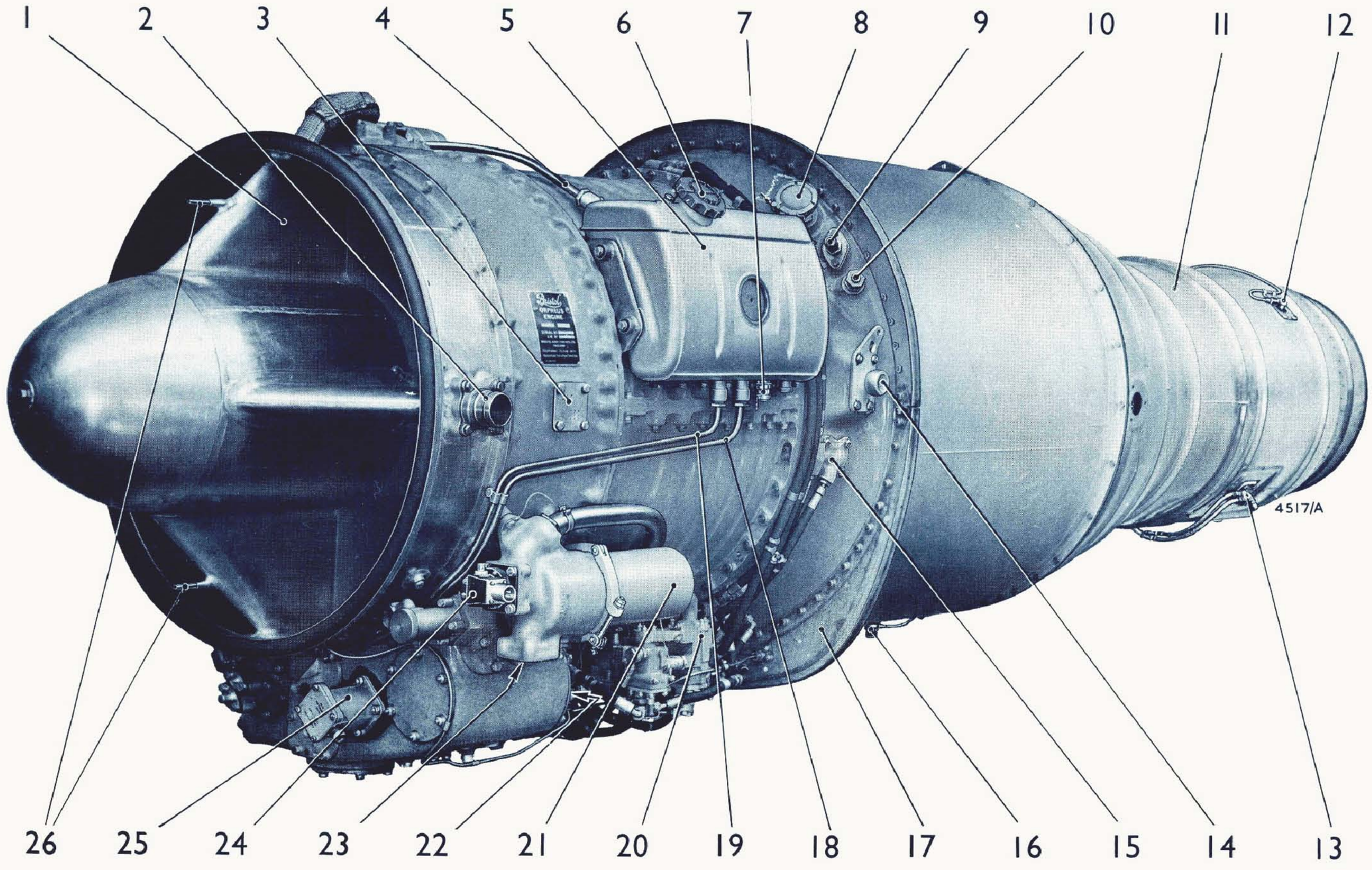

Left-hand view of Engine Change Unit

1. Jet pipe thermocouple junction box.
2. Combustion chamber casing.
3. E.C.U. rear lifting bracket.
4. Engine mounting trunnion (parallel).
5. Air bleed connection (aircraft services).
6. Delivery casing.
7. Cartridge starter breeches.
8. Oil tank vent pipe.
9. Starter gas delivery pipe.
10. Engine breather elbow.
11. Air intake duct nose bullet.
12. Engine front mounting.
13. Oil pump relief and check valves.
14. Main oil pump.
15. Scavenge oil filters.
16. Oil low pressure warning switch.
17. Air intake casing.
18. Generator location.
19. Oil feed to turbine rear bearing.
20. Air fuel ratio control.
21. Compressor.
22. Generator cooling air exit pipe.
23. Combined oil and cooling air pipe to rear bearing.
24. Static air connection.
25. Turbine shroud drain.
26. Thermocouple.

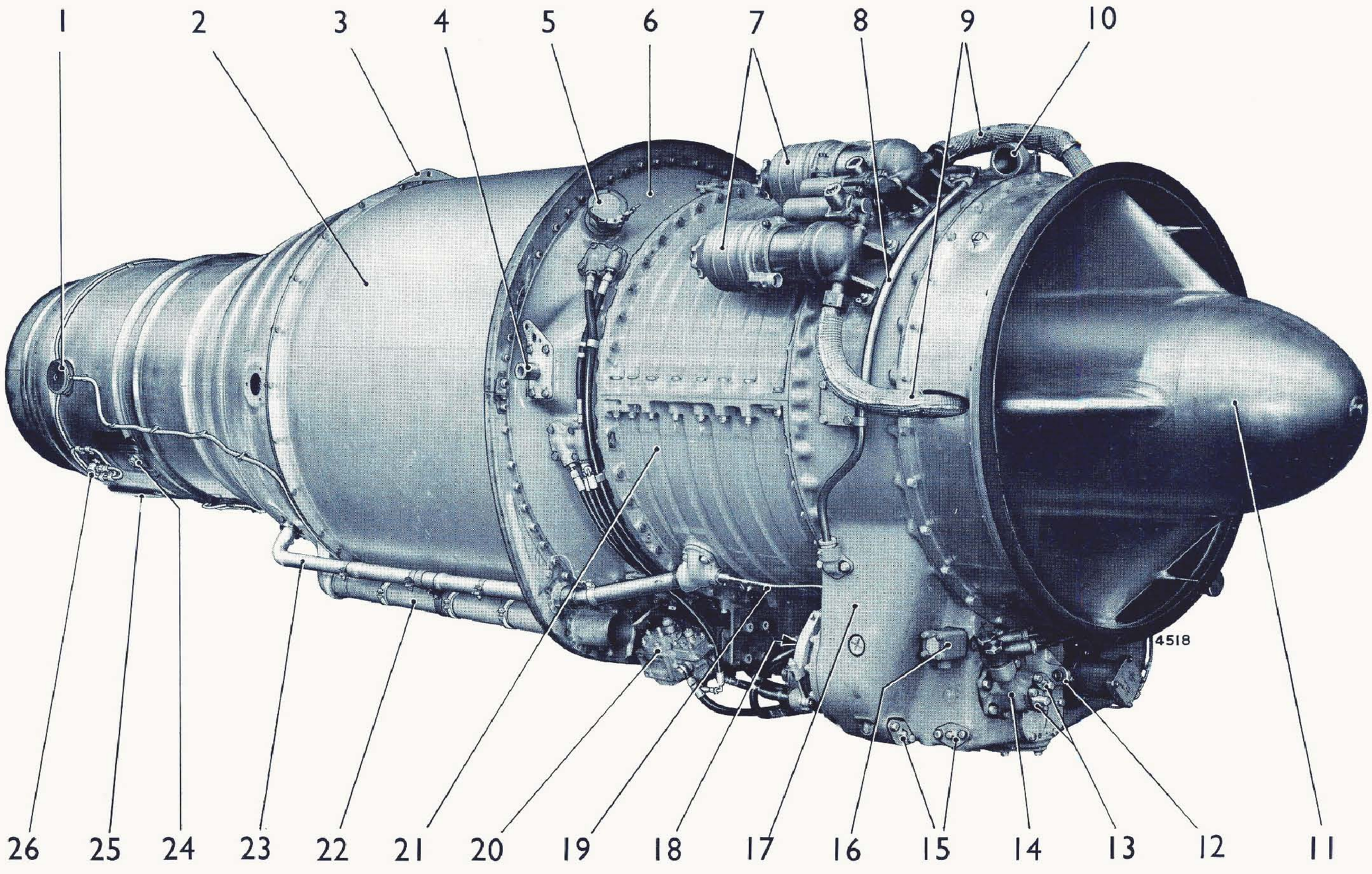

Right-hand view of Engine Change Unit

THERMAL CYCLES

CONSTANT VOLUME CYCLE

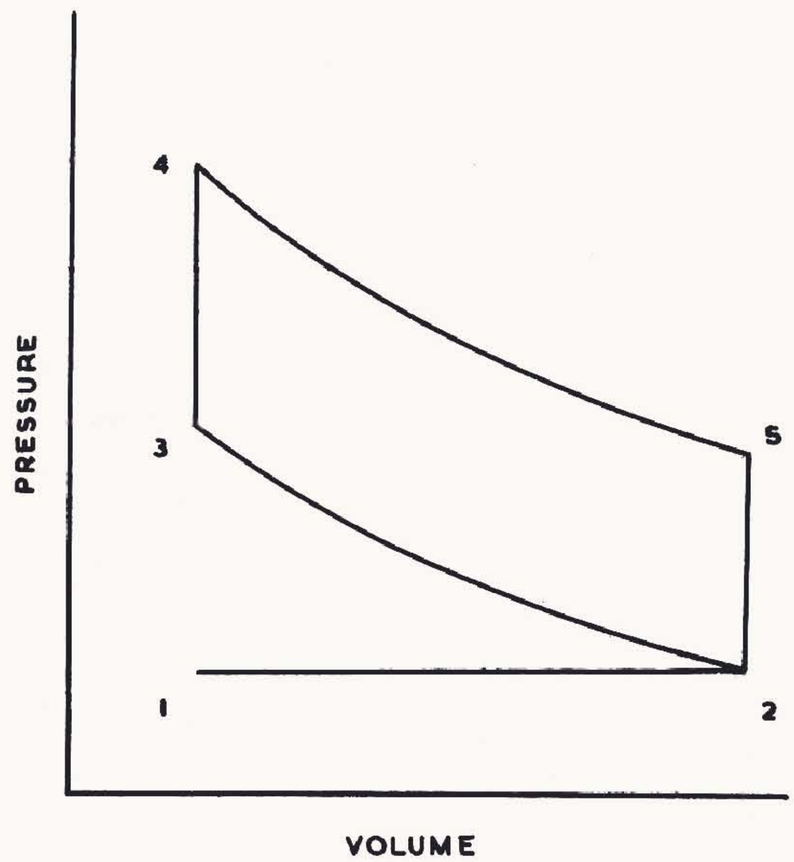

I.C. ENGINE

CONSTANT PRESSURE CYCLE

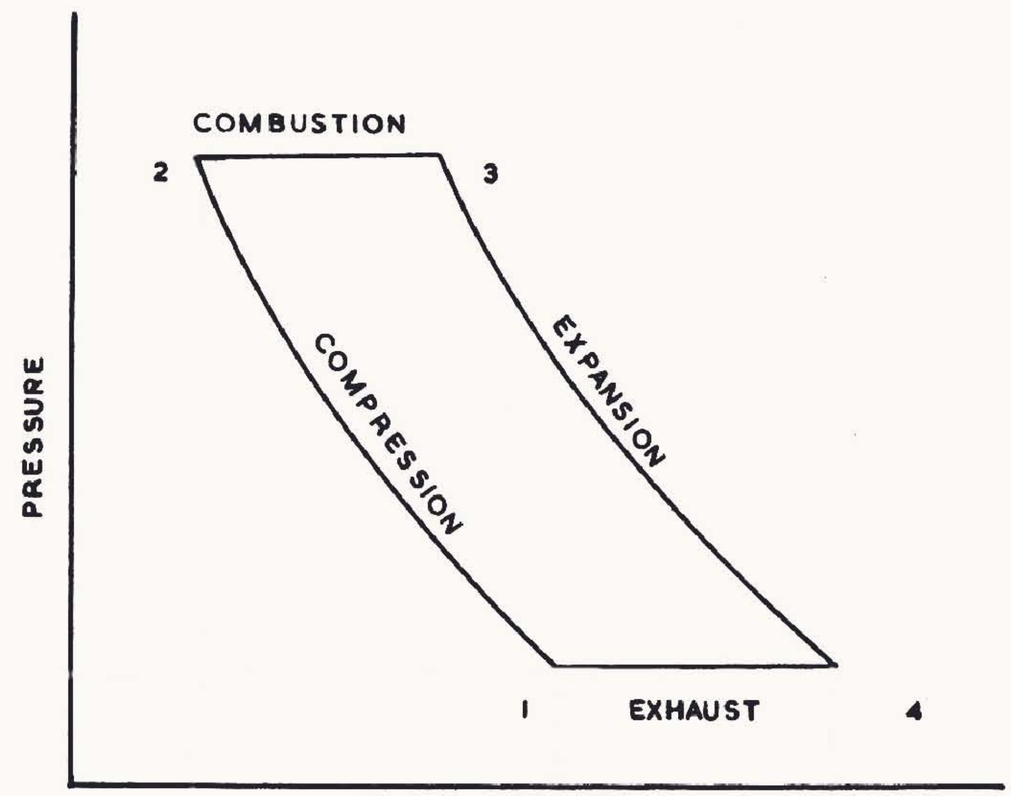

GAS TURBINE ENGINE

TP. 3238

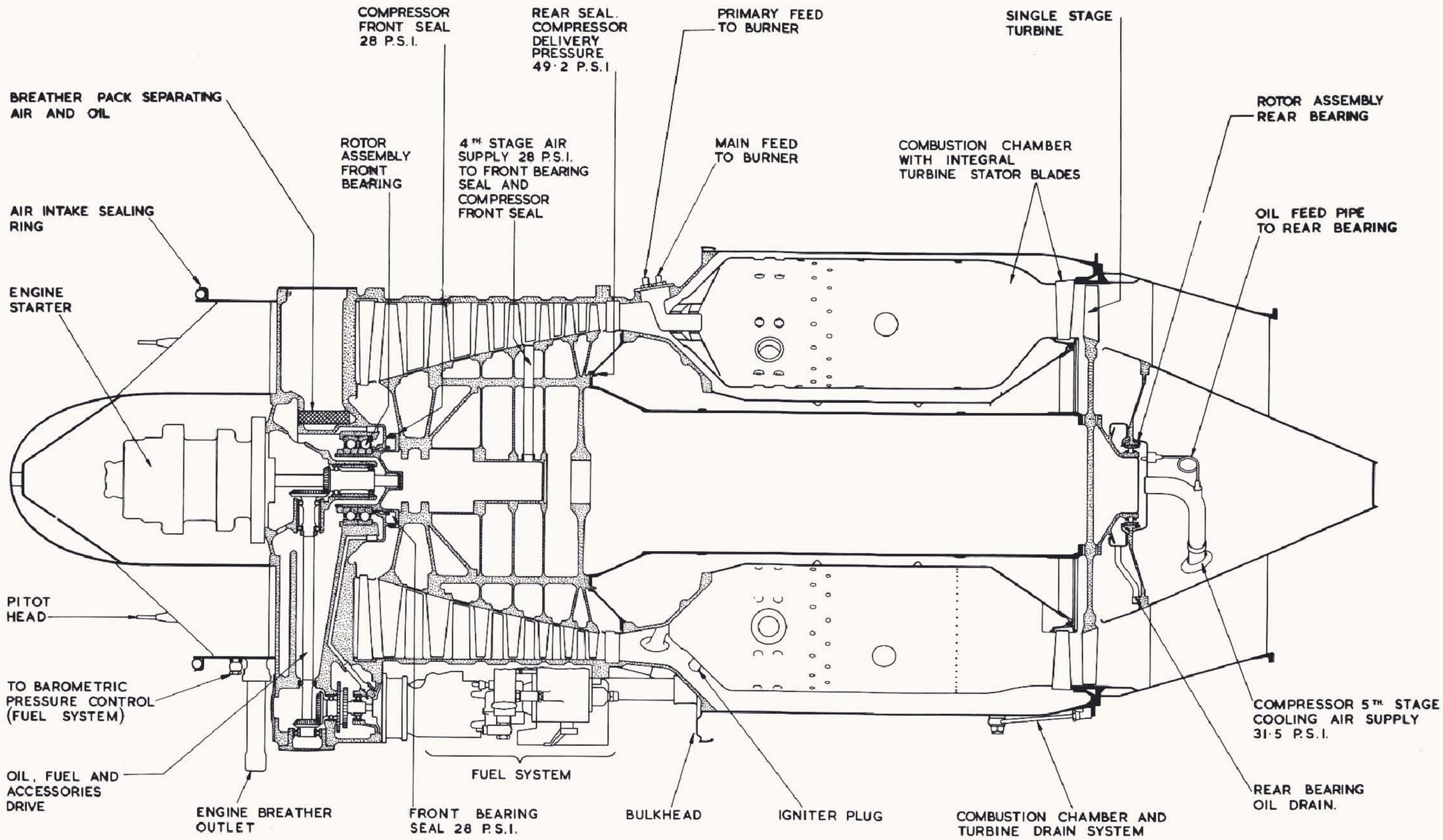

GENERAL INFORMATION DIAGRAM
BRISTOL ORPHEUS 3 TURBOJET

BRISTOL AERO-ENGINES LTD. TECHNICAL PUBLICATIONS DEPT. FILTON. BRISTOL. ENGLAND.	
TRACED. M.M.C.	TP.3428
DATE. JULY. 1956	
ISSUE. 1	1 SHEET.

BRISTOL SIDDELEY ENGINES LTD.

AERO ENGINE SCHOOL

SECTION 1

CONTENTS

1 GAS FLOW

800

First Law of Thermodynamics

Broadly speaking this may be stated as follows:- Heat and mechanical energy are mutually convertible, and the 'rate of exchange' is constant and can be measured.

The rate of exchange is known as 'Joule's equivalent' and is usually denoted by the letter J. The value of J is 1,400 ft.lb. This means 1,400 ft. lb. of mechanical work would be required to raise the temperature of 1.lb.of water through one degree centigrade. This equals 1 Centigrade Heat Unit (C.H.U.).

For example, if two rotating surfaces are in contact, and are not lubricated, the heat generated by the friction between them will soon raise their temperature by a measurable amount. Thus mechanical energy is converted into heat, but although this process is quite simple, it is far more difficult to convert heat to mechanical energy. The latter indeed, is seldom accomplished without considerable loss. This is shown by the comparatively low efficiency of the majority of heat engines.

The Second Law of Thermodynamics

This may be stated as:- Heat cannot be conveyed from one body to another which is at a higher temperature, without the expenditure of energy supplied from an external source.

In other words, heat energy always runs down a temperature gradient, like water down a hill, and will not climb up a gradient unless forced to do so by the application of energy from an external source.

Boyle's Law

If the temperature remains constant, the volume of a given mass of gas varies inversely as the pressure exerted upon it.

Charles Law.....

in a straight line but will move sideways to the left and the distance it travels in this direction will be in direct proportion to the strength of the gust (or magnitude of the outside force).

Law 3. To every action there is an equal and opposite reaction.

Bernouilli's Theorem

As velocity increases the pressure decreases Pressure gradient in direction of flow.

As velocity decreases the pressure increases. Reverse flow gradient tends to cause flow in the opposite direction.

Force and Mass

FORCE may be defined as anything which changes, or tends to change the state of rest, or uniform motion of a body. That which is capable of setting bodies in motion, or stopping them when they are in motion, or altering the direction or manner of their movement is called force.

The unit of force which is used generally in English-speaking countries is the weight of the standard pound. The standard pound is a piece of platinum kept in the Standards Department of the Board of Trade, which if suspended from a spring balance will deflect the spring and its indicator a certain distance, any other object which will deflect the spring the same amount when suspended from it is said to weigh one pound. Similarly, any force exerting a pull which will deflect the spring by this same amount is said to be the force of one pound.

MASS is defined as "the quantity of matter contained in a body". Any two bodies will have equal masses when they each weigh the same, irrespective of their size. A pound of lead would be comparatively small in.....

small in volume when compared with a pound of aluminium, yet each would be of equal mass. If, therefore, two bodies are of equal mass they will also be of equal weight (at the same place) and if one body contains two,three,four etc; times the mass of the other, that body will weigh two,three,four,etc;times as much as the other.

GAS FLOW.

Through the annular intake air is directed at the correct angle to the compressor by the entry guide vanes.

The compressor has seven stages, each stage comprising a ring of stator and rotor blades, the passageway between the blades forming a divergent duct in the direction of flow.

At each rotor stage the air is accelerated, this increases its total pressure and temperature. At the stator the air is decelerated, thus increasing the static pressure. This increase in pressure is continued at each stage throughout the compressor up to the delivery stage, so that the pressure and temperature are increased, whilst the volume is decreased, and the axial velocity remains roughly constant.

From the compressor exit the flow is diffused into the annular space surrounding the combustion chambers, thus reducing the axial velocity, and increasing the static pressure. Some of the air passes through the swirlers and primary holes of the combustion chambers, and fuel is mixed and burnt in chemically correct proportions so that combustion is completed in a very short time. This gives a very high gas temperature, and the remaining air is passed into the dilution zone where it mixes with the primary stream, to reduce the temperature to the value required by the turbine.

The turbine unit comprises a ring of stator and rotor blades, through which the passageways are convergent in the direction of flow. At the stator exit the velocity is increased and a whirl component is introduced. In expanding through the turbine there is a combined impulse and reaction effect, the temperature and pressure will be reduced so putting

work into the.....

work into the wheel to drive the compressor. Before entering the jet pipe the gas flow is straigtened by the vanes in the exhaust annulus to ensure an axial flow in the duct.

The residual energy in the gas is further reduced by expansion through the convergent jet nozzle, the pressure and temperature being reduced, and the velocity increased at this point, thus for a constant mass flow the velocity change from the engine inlet to the jet pipe determines the thrust,

$$T = \frac{W\ (V - U)}{g}$$

When running at maximum conditions the jet nozzle becomes choked and thus the expansion is limited, this gives rise to an additional nozzle thrust which must be added to the momentum thrust to give the total value

T = Thrust

W = Weight (LBS)

V = Velocity at jet Ft/Sec.

U = Aircraft velocity Ft/Sec.

g = 32.2 ft.sec.

M = Mass = $\frac{W}{g}$

Thrust (momentum) = Force = $\frac{W\ (V-U)}{g}$

Thrust (nozzle) = Nozzle pressure difference x nozzle area.

Thrust (total) at T.O. = (momentum thrust + nozzle thrust) x .98

T.H.P. (Static) = Thrust Horse Power = $\frac{T}{2.6}$

T.H.P. (Flight) = $\frac{T \times U}{550}$

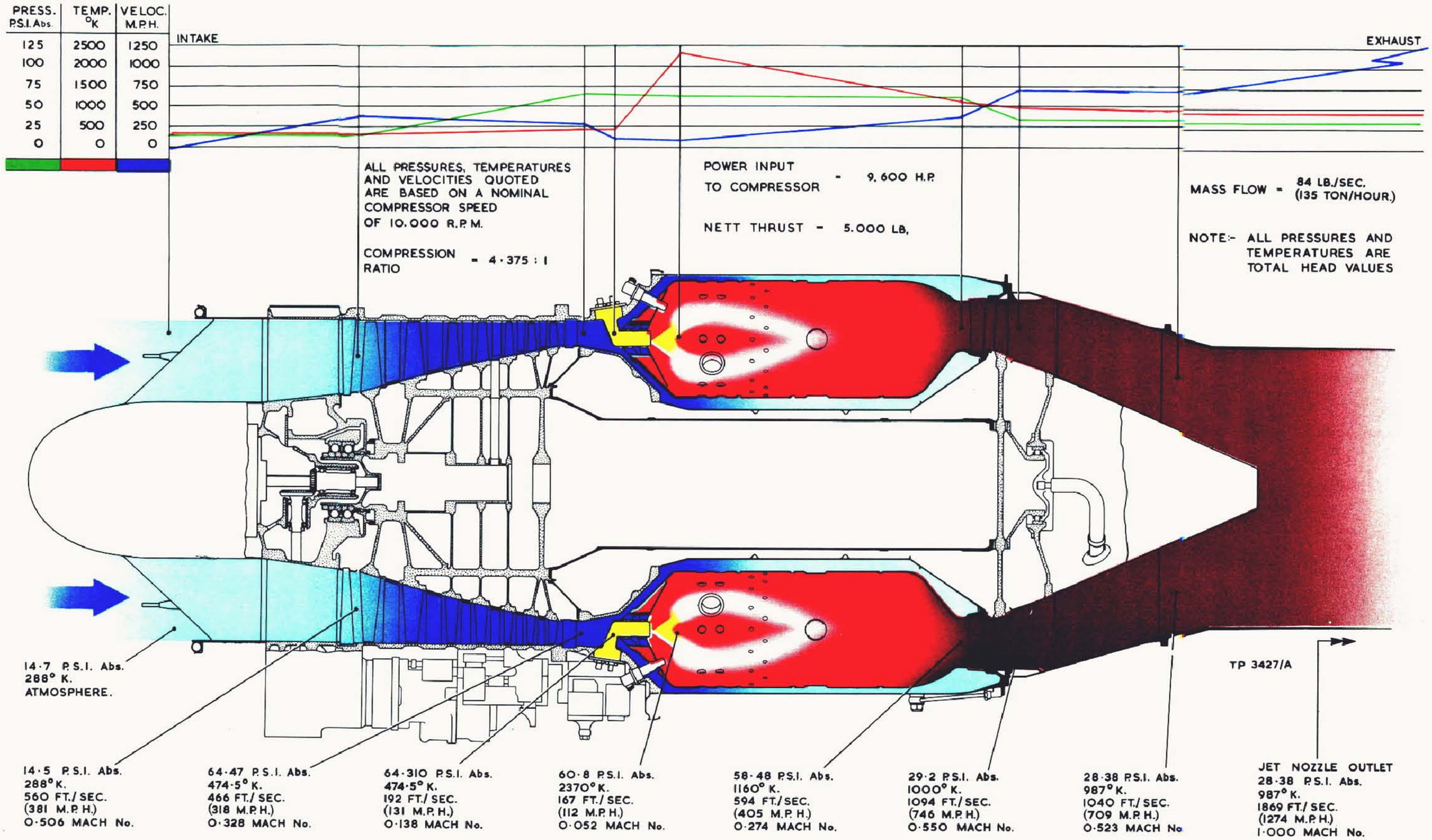

WORKING CYCLE — ORPHEUS 803 TURBOJET.

BRISTOL SIDDELEY ENGINES LTD.

AERO ENGINE SCHOOL

SECTION 2

CONTENTS

1 LEADING PARTICULARS

2 PERFORMANCE CHART

3 GENERAL INFORMATION

4 GENERAL INFORMATION DIAGRAMS

BRISTOL SIDDELEY ENGINES LTD.

AERO ENGINE SCHOOL

ORPHEUS 803

REFERENCE DATA

A jet propulsion engine employing a seven stage axial compressor driven by a single turbine.

Rotation	Anti-clockwise viewed from rear
Combustion System	Straight flow cannular combustion chamber with seven separate flame tubes.
Numbering of Flame Tubes	Clockwise viewed from the rear of engine No:1 position at top.
Fuel System	
Fuel Specification	Kerosene D.Eng. R.D. 2482 (AVTUR) or 2494 AVTUR/50 2486 AVTAG
Fuel Pump	Lucas type G.D. 11/10K. Multi-plunger, Variable Stroke.
Fuel Filter	Vokes CX. 59817
Fuel Pump Inlet Pressure (Min:)	5 p.s.i. (from Aircraft booster pump)
Combined Control Unit (C.C.U.)	Lucas Type 41/32 AP.
P_2/P_1 Switch	Lucas A.S.C. 2/2B
Air Fuel Ratio Control	Lucas Type 6/11K
J.P.T.Limiter	J.P.T.L. 3/1A
Duplex Burners (7)	Lucas Type CSH. 76
Low Pressure Warning Switch	Smiths Type 1038 P.G.

Ignition System .....

Ignition System

Igniter Plugs	KLG RH/375/1
Number and location of igniter plugs	2. One each in No. 4 and No. 7 combustion chambers

Lubrication System

Type	Dry sump - a feed from the main oil pump and a metering device gives continuous circulation to all bearings - except the turbine bearing which is lubricated by a metered dead-loss supply. The system is supplied from an oil tank mounted on the left hand side of the compressor casing.
Oil Specification	D.E.R.D. 2487 (Synthetic) " 2479/1 Mineral O.E.P.71
Oil Pressure	45/55 p.s.i.
Low Pressure Warning Switch	Teddington F.O.M./A/7
Oil Inlet Temperature	Not recorded
Oil Pressure Filter	Vokes B.56753
Oil Consumption	2 pints/hour (Maximum)
Oil Tank Capacity	14 pints (Imperial pints)

Number of Thermocouples (Jet Pipe)	2.
Type	K.L.G.H. A70/15

Accessories

Turbo-starter

Type	B.T.H. Q.T. 29 - B/1
Mounting	Buried in air intake duct bullet
Starter Breech	B.T.H. Q.B. 8
Mounting	Top right-hand side of the air intake casing
Cartridge	I.C.I. Type R.E.S. 17/49
Cartridge Burning	6 to 8 seconds

Percentage Tachometer Generator

Type	Kelvin and Hughes (percentage Type) K.G.A/0701
Location	Front left-hand side of accessory drives housing

Generator .....

Generator

Type	Labinal 2406.A
Output	4.0 kilowatt
Location	Right-hand side of the air intake casing rear face

Hydraulic Pump

Type	Messier 2102
Location	Left-hand side of the air intake casing rear face

ORPHEUS 80302

OPERATING LIMITATIONS

CONDITION	R.P.M.	% R.P.M.	JET PIPE TEMPERATURE (MEAN OF 2 COUPLES)	TIME LIMIT
TAKE OFF AND OPERATIONAL NECESSITY	10,020	100	730°C	10 MINS. PER FLIGHT
INTERMEDIATE	9,720	97%	685°C	30 MINS. PER FLIGHT
MAX. CONTINUOUS	9,470	94.5%	650°C	UNLIMITED
APPROACH IDLING *		40% minimum	650°C	-
GROUND IDLE		35% minimum	650°C	-

Max. Overspeed = 103% (20 second limit)
Actual R.P.M. = % R.P.M. x 100.2
* Acceleration time, from this speed, at sea level static = 6 seconds
The initial speed for 5 second accelerations = 45%
Jet pipe temperature limiter setting on ground = 715°C/720°C

BRISTOL SIDDELEY ENGINES LTD.

AERO ENGINE SCHOOL

SECTION 3
CONTENTS

1 ENGINE FUEL SYSTEM

2 DELIVERY MANIFOLD AND BURNERS

3 FUEL SYSTEM ADJUSTMENTS

KEY

1. Low pressure warning switch.
2. Fuel outlet.
3. Front housing.
4. Fuel filter element.
5. Rear housing.
6. Multi-joint manacle clamp.
7. " O " seals.
8. Bleed valve.
9. Fuel inlet.

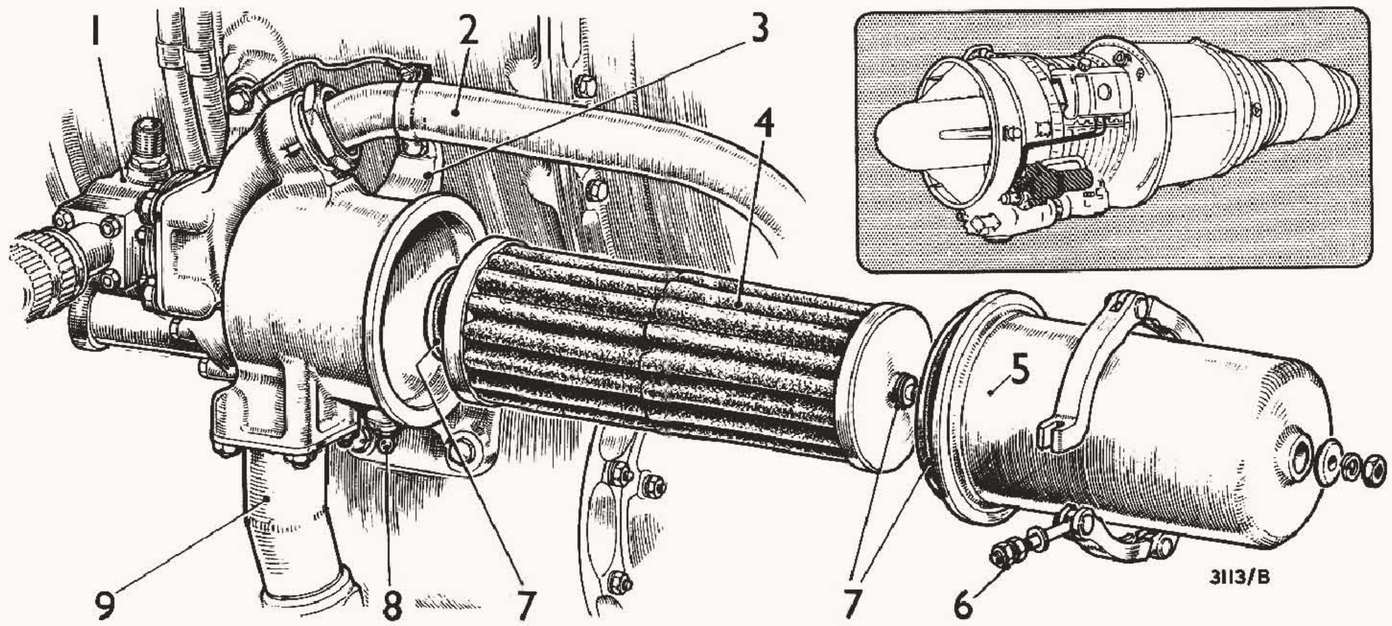

Low pressure fuel filter details

1. Air intake casing.
2. Fuel outlet.
3. "O" Seals.
4. Rear filter housing.
5. Manacle clamp.
6. Filter drain valve.
7. Fuel inlet.
8. Fuel low pressure warning switch.
9. Front filter housing.
10. Filter element.

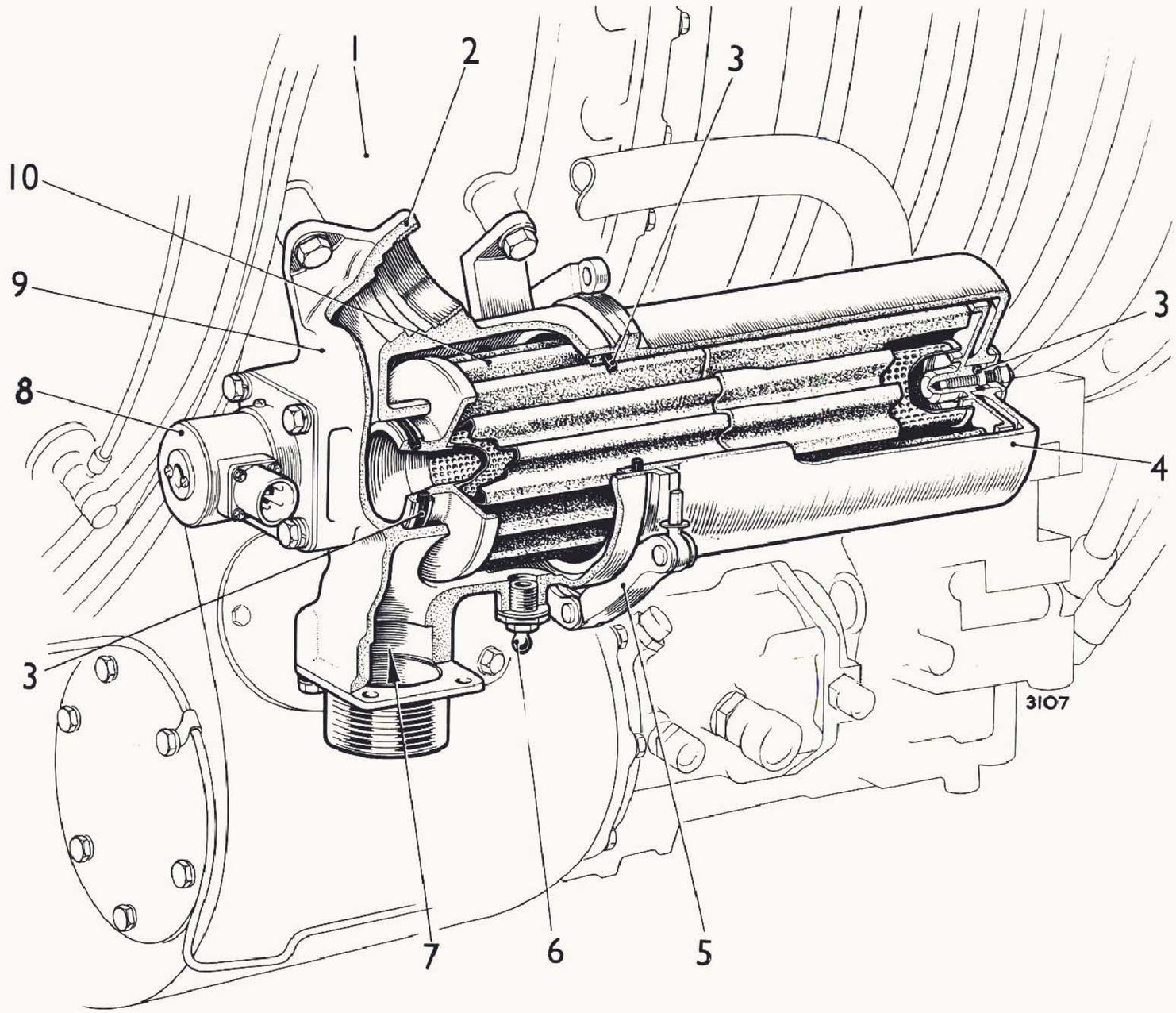

Low pressure fuel filter

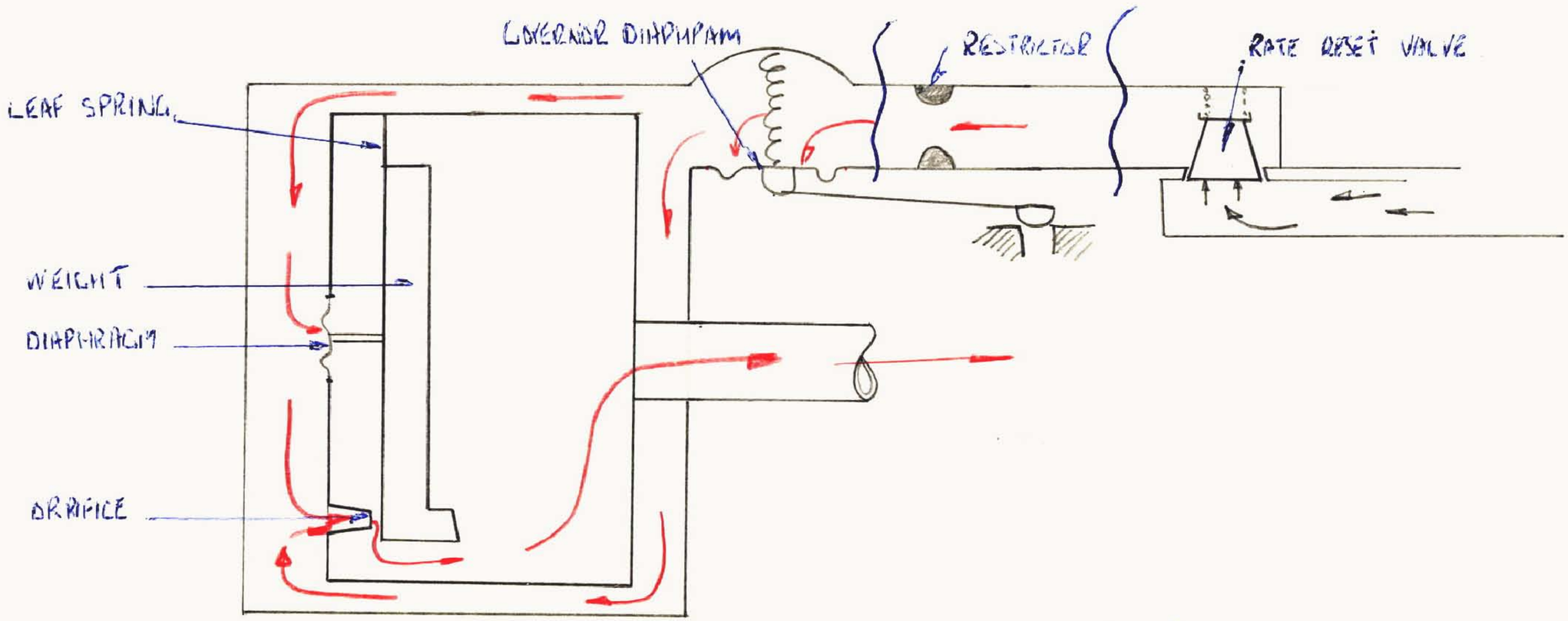

HYDRO MECHANICAL GOVERNOR

TO GOVERN THE FUEL FLOW WITH CHANGING SP. GRAVITY

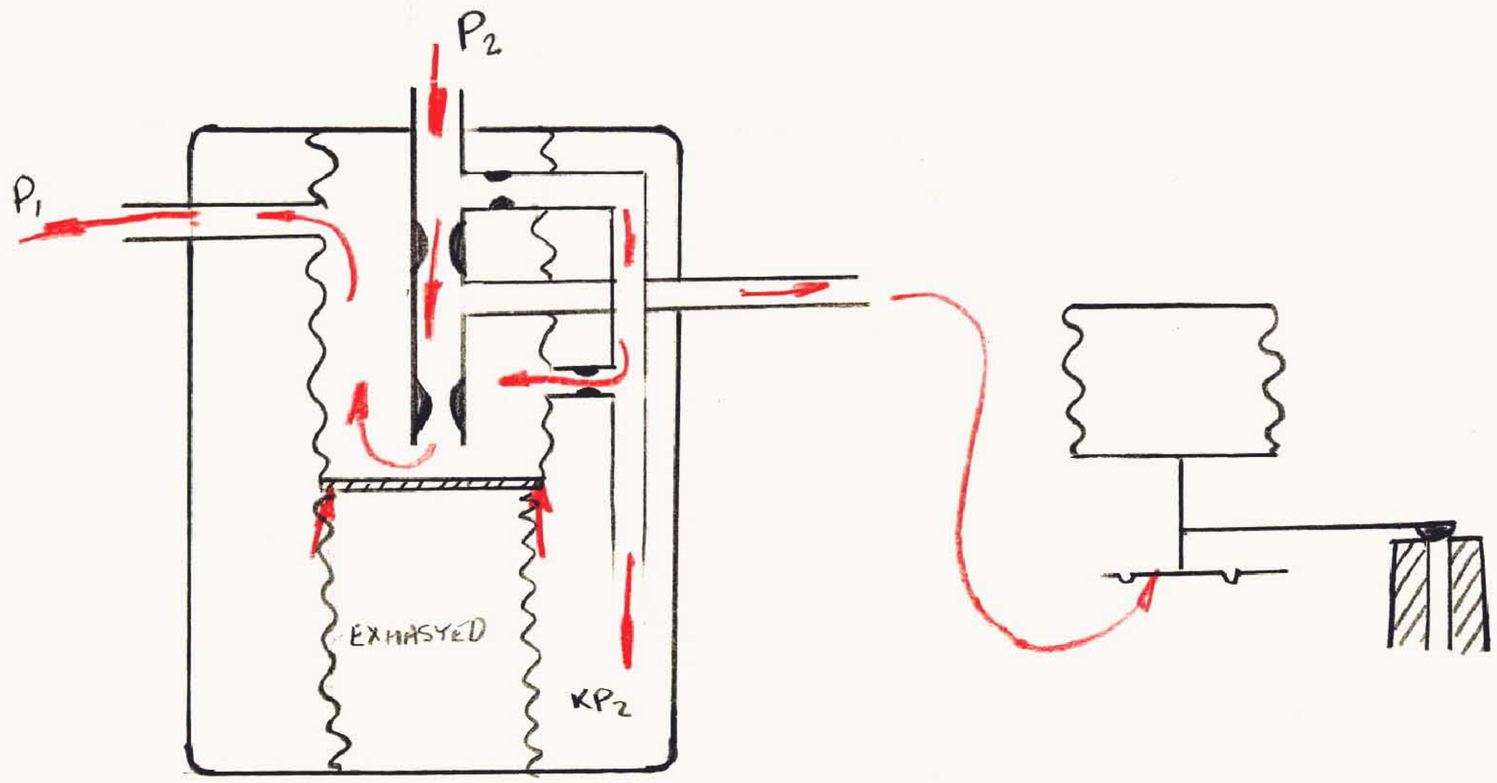

PRESSURE RATIO SWITCH

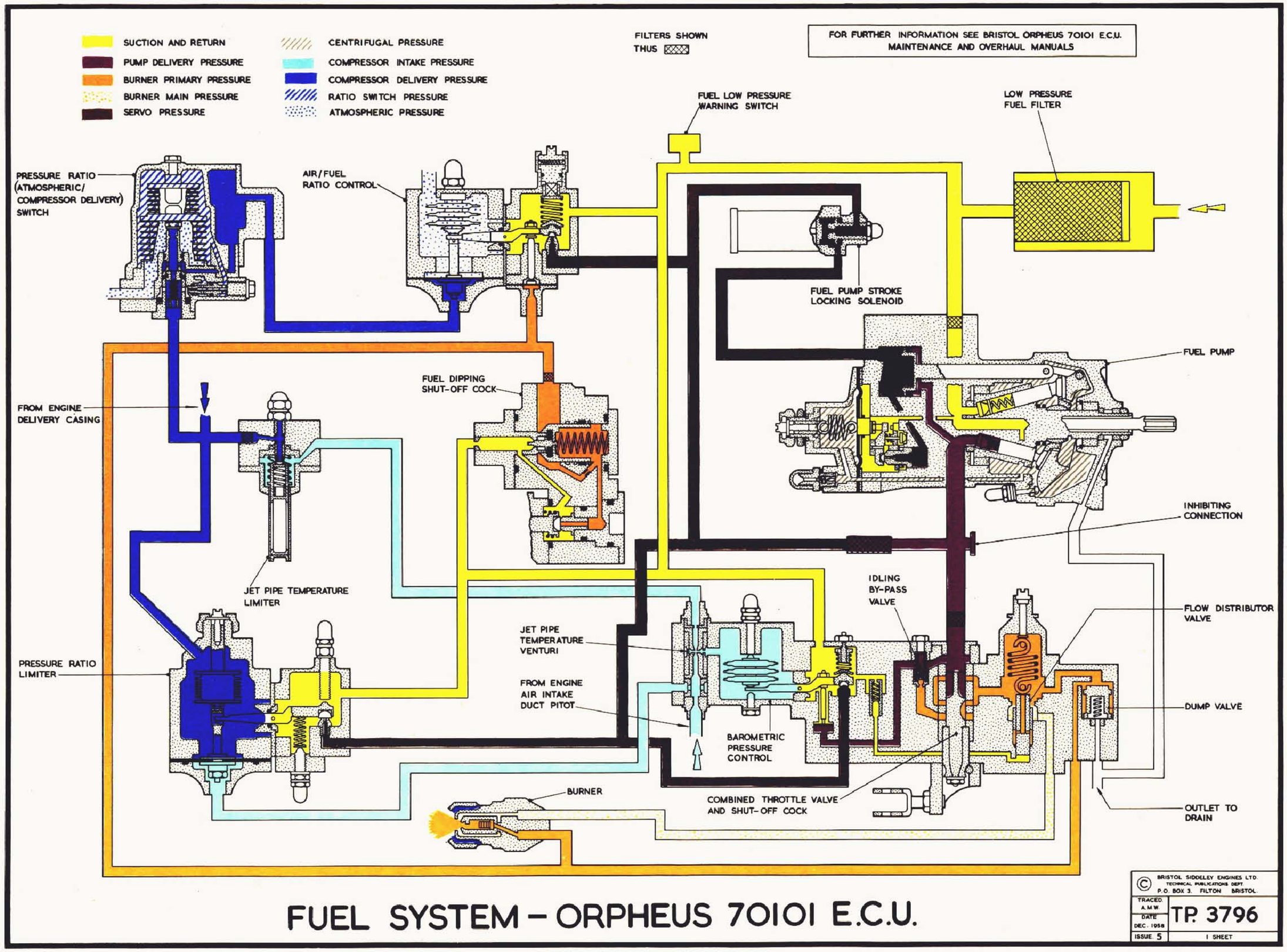

FUEL SYSTEM – ORPHEUS 70101 E.C.U.

TIME TO ACCELERATE FROM IDLE TO TAKE OFF : 5 to 8 SECS

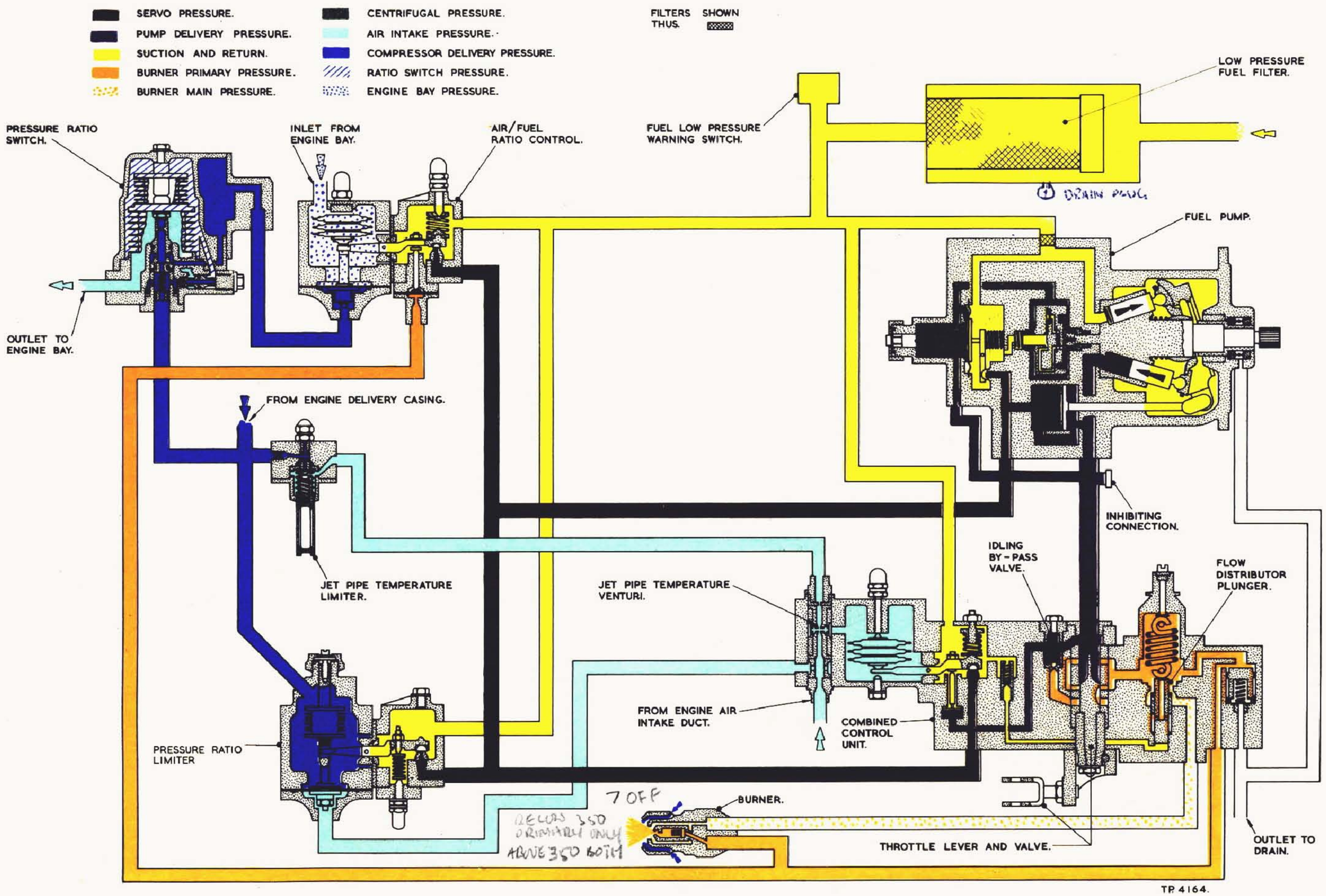

Diagram of fuel system.

NOTE : THE ACCELERATION IS LENGTHENED AS TEMP INCREASES
SHORTENS " " DECREASES. WITH FIXED SETTING OF A.F.R.C.

FUEL SYSTEM

The fuel system comprises:

The fuel filter.

The main fuel pump which incorporates the governor relay system and hydromechanical governor control.

Combined control unit (which includes)
Barometric pressure control.
Pilots throttle valve and high pressure shut off cock.

Flow P2 distributor switch.

Fuel/Air Ratio Control.

Pressure ratio limiter.

Jet pipe temperature limiter

Duplex burners.

Description

Fuel Filter

This unit which is mounted horizontally on the port side of the air intake casing, comprises three main components. The filter housing which is secured to the intake casing by a bolted flange, the filter bowl which is secured to the housing by a manacle clamp, the securing nut of which is torque loaded to 30 lbs/in. ± 5.

The filter element is secured to the filter bowl by a stud and nut.

Filter Housing

This housing is equipped with two fuel connections, the lower of which is connected to the aircraft fuel system, and the upper to the engine fuel pump inlet, provision is made on the front face of the housing for the fitting of the low fuel pressure warning switch, which is in communication with the filtered fuel.

The fuel drain valve at the bottom of the housing, comprises a plug whose inner face is screwed up against a seating, so that a port in the face which communicates with the bore of the nipple, is blanked off; drainage is effected by unscrewing the plug from its seat.

A bore formed in the housing provides the location for the filter outlet sleeve.

Filter Bowl .....

Filter Bowl and Element

The filter bowl is a cylindrical casing in which the element is housed. An 'O' type seal is fitted around the spigot where the bowl joins with the housing, and the two are secured together as previously mentioned.

The filter comprises a cylindrical corrugated felt and gauze element to which end caps are fitted, one of these being provided to close the filter end, and the other which has an integral sleeve, provides the outlet from the filter bore into the bore of the housing. An 'O' seal surrounds this sleeve where it fits into the housing.

In its passage through the filter, fuel from the inlet port is taken to the annulus between the outside of the element and the bore of the bowl, then through the filter wall to its bore, from which it flows into the bore of the housing which connects with the outlet port.

Fuel Pump.

The pump is mounted on the rear face of the gear casing, and consists of a rotor, supported by a cylindrical carbon bearing, and having formed in it seven inclined cylinders which accommodate the hardened steel pumping pistons. The pistons are located by the auxiliary camplate which is mounted on a universal thrust ball on the pump drive shaft. The ends of the pistons, which project from the cylinder bores, butt against a camplate which is mounted on a trunnion ring and fixed axially by two trunnion pins.

The angle of the camplate can be varied from (zero piston stroke) 90°, to a position inclined at an angle of 105° maximum piston stroke.

The cylinder bores in the rotor are stepped in diameter and the small ends terminate as seven

ports in the flat face of the rotor, which engages on two kidney shaped ports (inlet and outlet).

The rotor is pressed against the port face by the seven piston return springs and also by the fuel pressure acting on the annulus formed by the step in each cylinder bore, thus giving a sealing force between the rotor and ports.

Governor and Overspeed Governor

This governor is of the relay type, and is common to the overspeed governor and other control units, and consists of a piston operating in a cylinder against the action of two springs. The piston is connected to the trunnion ring by a link and piston rod, and controls the angularity of the camplate, the springs tend to turn the trunnion ring to the position of maximum angularity (Maximum piston stroke). Fuel at pump delivery pressure is taken across one side of the piston, and through a restrictor to the other side, which is connected by passages to the B.P.C. and governor half balls. Equilibrium is established when the fuel pressure on one side of the piston equals the reduced pressure plus the spring on the other side.

Hydro Mechanical Overspeed Governor

This device is used to control the engine Max: R.P.M., and depends solely on speed for its operation, and the design is such that governed speed is unaffected by changes in S.G. of the fuel.

The overspeed governor is contained within the fuel pump unit, and comprises a diaphragm which is subject to centrifugal pressure on the one side, and pump inlet pressure on the other,

the diaphragm is loaded by a spring in tension, and carries a button at its centre which is contract with one end of a pivoted rocker, the other end of the rocker carries a half ball which controls the bleed from the spring side of the servo piston, a spring beneath the rocker controls the stall pressure of the system.

A passageway from the fuel pump outlet is connected via a restrictor to the spring side of the governor diaphragm, and a further passageway connects this chamber to the one in which the governor rotor is housed.

Rotor

The rotor comprises a shallow cylinder which is surrounded by fuel at governor pressure on its outside, while its bore is connected to pump suction, the bore being sealed against chamber pressure by a carbon seal and face plate. at one end, and by a diaphragm at the other, an orifice in this latter end, permits the flow of fuel from the chamber into the rotor bore at a controlled rate.

A weighted lever which sets in the capacity of a valve, is connected at one end to the rotor by a leaf hinge and at its centre this lever is connected to the diaphragm.

Governor Operation

Fuel at pump delivery pressure is taken, via a restrictor to the governor diaphragm chamber, and so to the rotor chamber, from here it is delivered through the restricting orifice to the rotor bore, which is in communication with the fuel pump inlet.

Centrifugal force acting on the weight mass will cause a movement of the beam towards the restricting orifice, this movement is opposed by the force created due to the pressure difference on the diaphragm, so that at any R.P.M equilibrium is established, and

the flow through the restrictor is controlled on an r.p.m. basis.

As speed is increased, this flow will progressively be reduced, with a consequent rise in rotor chamber, and governor diaphragm chamber pressure, until at max: R.P.M. the force on the governor diaphragm is sufficient to unseat the half ball, which allows a bleed from the spring chamber of the pump servo piston, so limiting the pump stroke, which in turn limits the fuel supplied to the engine and therefore the engine speed.

COMBINED CONTROL UNIT

Barometric Pressure Control

This is mounted alongside the main fuel pump and is interconnected with it by three pipes, one from the main delivery pressure, another from the pump inlet, and the third from the servo pressure line. The unit comprises a cast body divided into separate chambers i.e. capsule chamber, and valve chamber, a rocker lever which extends into both chambers is sealed at its pivot to prevent leakage, so that the chambers are isolated. The end of the rocker lever which extends into the valve chamber body, has a socket fitted with a half ball, locating on the top of an orifice, to form a valve. The valve is held in the closed position by a spring which is adjusted by a screw. The underside of the orifice is supplied with fuel from the spring side of the governor relay piston (servo) and is filtered to ensure that foreign matter does not reach the valve.

The rocker arm is controlled by the pressure from the main fuel system operating on a small diaphragm, piston and needle, which are mounted in an adjustable sleeve fitted in the bottom of the valve chamber.....

valve chamber. The upper end of the needle contacts the adjusting screw on the rocker arm.

The end of the rocker lever, which extends into the capsule chamber has a small socket which locates the lower pivot point on the barometric capsule, the capsule chamber is balanced to intake pressure by a pipe connected to a pitot in the lower vane of the intake duct.

Combined Throttle Valve and High Pressure Cock

This unit is provided to give control over the engine by limiting the fuel flow to meet a required set of conditions.

It is supplied with fuel from the pump, and comprises a rotary slotted valve operating in the bore of a sleeve in which are a number of holes, operation of the pilots throttle lever causes rotation of the valve so that fuel supplied through its slots flows through the holes in the sleeve to an annular space around the sleeve, from whence the flow is continued to the flow distributor. The number of holes exposed, and therefore the flow, depends on the amount of movement of the valve. A by-pass flow (which is adjustable) is provided for Idling this is taken via an adjustable restrictor to a further set of slots in the valve and via elongated ports in the sleeve to the main outlet annulus. In addition to its operation as a throttle, the valve can be rotated so that all the sleeve ports are blanked off, so operating in the capacity of a high pressure cock.

Flow Distributor

This unit is supplied with fuel from the throttle valve and is provided to control the fuel supply to the burners, so that at low flow conditions the primary orifice in the burner only is supplied with fuel, at high flow conditions both primary and main orifice are in operation; this is brought about by the action of a spring loaded plunger which blanks off the seven metering ports leading to the burner main orifice until

A predetermined.....

a predetermined pressure is reached, seven pipes connected to the body of the unit, feed to the separate burners for the main flow, and a single pipe delivers the primary flow to the radial pipe which connects all the burners.

A dump valve in the unit provides a fuel drain from the primary line on shut down, and a further drain is provided to prevent a hydraulic lock on the main valve; this is taken through an internal passageway to join the B.P.C. servo return line. A non-return valve in the passageway prevents leakage past the valve into the engine in the event of the booster pumps being operated, when the engine, is stationary, and ensures that no fuel is supplied to keep the engine running when the cut-off is operated.

P2
P1 switch

This device which operates in conjunction with the A.F.R.C. is designed to impart a step to the operating line of this unit, thus ensuring that the A.F.R.C. retains its functions as an acceleration control, without imposing a limitation on the engine performance at altitude.

The unit comprises a chamber, which forms a housing for two capsules in tandem which are connected by a valve, the bore of one of these capsules is connected to engine bay pressure whilst the other capsule is exhausted; two passageways are connected to compressor delivery pressure at their outer ends, and to the engine bay via the bore of the large capsule at their inner ends. Each passage contains two restrictors and tappings taken from between the restrictors, are connected to the A.F.R.C. and to the switch unit capsule chamber respectively.

Operation .....

Operation

When the engine is running at low compression ratios the valve is open and the supply of air from the compressor delivery pressure flows through the passageways, with a consequent pressure drop, this reduced pressure is applied from one of the passageways to the A.F.R.C. and from the other to the unit capsule chamber, as the engine speed increases the capsule chamber pressure will rise, to the value necessary to close the valve, when this happens, the flow in the passageway which is connected to the A.F.R.C. will cease, so that full delivery pressure will be applied to the diaphragm of that unit, thus bringing about a shift in the operating line.

Fuel Air Ratio Control

This device is used to limit the fuel supply to the engine during acceleration periods, so that an increase in engine speed is obtained without incurring high turbine entry temperatures, and with a reduced tendency to stall.

The unit is designed on the principle that if the fuel/air ratio is maintained within certain limits, the temperature can be controlled to a known value during combustion; in its operation it takes compressor pressure, and burner line pressure as a measure of air and fuel flow.

The burner line pressure is made a direct measure of flow by the plunger in the flow distributor which acts in the capacity of a pressurising valve.

The unit comprises a cast body subdivided into a capsule chamber and a valve chamber by a pivot plate assembly, carrying a rocker lever which extends into both chambers.

At the end of the rocker lever in the valve chamber is a socket which carries a half ball, this seats an an orifice to form a valve, and is normally held closed.....

held closed by the action of a spring. Fuel at pump servo pressure is delivered via a filter to the orifice.

A push rod in the valve chamber is in contact with the lever at its upper end, and with a piston at its lower end, a diaphragm beneath the piston acts as a seal.

Fuel at burner line pressure is delivered to the underside of the diaphragm. The other end of the rocker lever which extends into the capsule chamber is pivoted in such a manner as to be acted upon by a force produced as a result of pressure on the diaphragm. Diaphragm and capsule areas are equal, so that changes in capsule chamber pressure are compensated.

The underside of the diaphragm is connected with an air supply from the compressor delivery which is delivered via the $\frac{P2}{P1}$ switch, the capsule which is exhausted is contained within a chamber which is connected to intake pressure.

During steady running conditions the unit is inoperative, but during acceleration the half ball will become unseated as a result of the rise in burner line pressure acting on the piston, and during the period equilibrium will be established between this force and that acting on the diaphragm so that the fuel/air ratio is controlled.

Pressure Ratio Limiter

This device is provided to limit the compressor pressure ratio at altitude, and so prevent extinction, which would occur if the ratio is raised above a given value.

This unit is similar in construction to the A.F.R.C. and comprises a pivoted beam which is connected to an exhausted capsule at the one end, and carries a half ball at the other, this half ball acting.....

ball acting to control the flow through an orifice which is connected with the fuel pump servo piston, a spring acting on the beam stabilizes the system. The capsule is connected to a diaphragm, which has a greater effective area than itself. The capsule chamber, and therefore the capsule and one side of the diaphragm, are connected with the compressor delivery pressure, whilst the other side of the diaphragm is connected to the air intake pressure.

Operation

When operating at a constant R.P.M. the reduction in temperature which accompanies an increase in altitude, will have the effect of increasing the compressor pressure ratio, to limit this effect the device operates in the following manner. When the compressor delivery pressure acting on an area which is equal to, (diaphragm area - capsule area) creates a force greater than, (intake pressure x diaphragm area), the force acting on the beam will be such that the half ball will become unseated, so that the stroke of the fuel pump, and therefore the fuel supply to the engine, will be limited, this in turn will limit engine R.P.M. and therefore the pressure ratio.

Jet Pipe Temperature Limiter

This device which is inserted into the jet pipe, limits the jet pipe temperature, and therefore the turbine entry temperature at altitude; by using the jet pipe temperature to limit the fuel supply, as altitude is increased.

The unit comprises an element which is inserted into the jet pipe, which is made up of a quartz rod, surrounded by a nimonic sheath, this is connected to a housing, which is equipped with two connections, one of which is supplied with air at compressor delivery pressure, whilst the other connects with the air intake, via a venturi on the B.P.C. capsule chamber, a half ball valve interposed between the two is protected by a filter in the inlet position.

A spring.....

A spring, which is in contact with the outer end of the quartz rod, acts to keep a half ball closed, and a further spring acting in the opposite direction keeps the quartz rod in contact with the nimonic sleeve. With this arrangement, at the limiting temperature, the differential expansion between the quartz and nimonic will be such that the valve will open.

Operation

When the limiting temperature is reached and the valve opens, air at compressor delivery pressure will flow through an external pipe to the venturi on B.P.C. capsule chamber, and through a further pipe to escape through the pitot into the air intake, the flow through the venturi will reduce the B.P.C. capsule chamber pressure, and as a result the capsule will expand, thereby unseating the B.P.C. half ball, so that the pump servo moves toward reduced stroke, thus limiting the fuel flow, which in turn will limit the R.P.M. and therefore the turbine entry and jet pipe temperature.

Burners

The Duplex 3 burners are secured to their locations in the delivery casing by tabwashered set bolts. The stem of each burner passes through the flanged connection of the combustion chamber nose cone unit, and the burner body locates in the bore of the flame tube swirler.

This type of burner employs two sets of fuel inlet passages each having its own swirl and orifice plates. Fuel is supplied to one or both of these passages according to the fuel requirements of the engine by means of the flow distributor unit. Thus low flows will be fed through the primary passage, where additional fuel requirements for normal operations are passed through the main passage, both passages then working together.

A mounting.....

A mounting plate accommodating the two inlet connections, is attached to the burner adaptor by means of two rigid inlet pipes. A wire-wound filter is fitted in the primary drilling of the burner.

The atomiser assembly is contained by a flanged cylindrical sleeve being located by a shroud, which screws on to the burner adaptor. The assembly consists of a distributor block, pilot swirl plate, rear orifice plate, main swirl plate and front orifice plate. The shroud which is locked on the burner adaptor by means of a tab washer contains a series of holes which admit a stream of air to an annulus between the shroud and the sleeve and then via tangential slots across the outlet orifice of the burner. In this way, the formation of a carbon deposit is prevented.

Throttle Adjustment

With the pilots lever and the throttle valve set to the cut off position, connect up the linkage to the throttle valve, then move the pilots lever to the T.O. position, and check that the throttle moves through its complete range of travel, if this is not obtained make the necessary adjustment to the linkage.

When the correct travel has been obtained retract the pilots lever to the idling position, and check that the angle of the throttle valve lever is 30°. Start the engine in the normal manner and observe the R.P.M. obtained at the idling gate, and if necessary make an adjustment at the position provided on the pilots throttle quadrant.

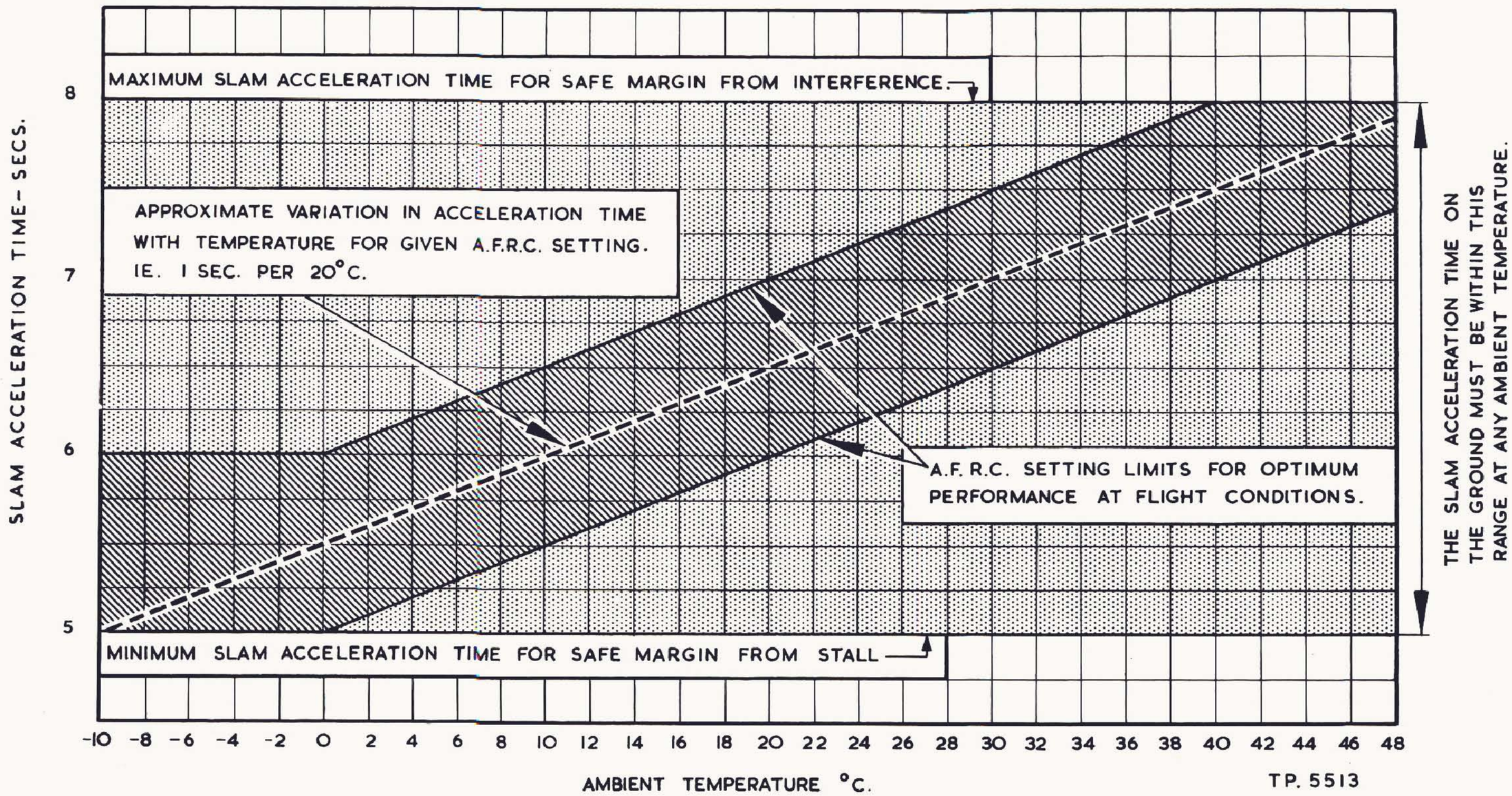
MAXIMUM SLAM ACCELERATION TIME FOR SAFE MARGIN FROM INTERFERENCE.
APPROXIMATE VARIATION IN ACCELERATION TIME WITH TEMPERATURE FOR GIVEN A.F.R.C. SETTING. IE. 1 SEC. PER 20°C.
A.F.R.C. SETTING LIMITS FOR OPTIMUM PERFORMANCE AT FLIGHT CONDITIONS.
MINIMUM SLAM ACCELERATION TIME FOR SAFE MARGIN FROM STALL
SLAM ACCELERATION TIME - SECS.
8
7
6
5
-10 -8 -6 -4 -2 0 2 4 6 8 10 12 14 16 18 20 22 24 26 28 30 32 34 36 38 40 42 44 46 48
AMBIENT TEMPERATURE °C.
THE SLAM ACCELERATION TIME ON THE GROUND MUST BE WITHIN THIS RANGE AT ANY AMBIENT TEMPERATURE.
TP. 5513

GROUND SETTINGS

CONDITION	SETTING
Max R.P.M. governor	100% (plus 0% minus 0.25%)
Idling R.P.M.	35% (plus 1% minus 0%)
Jet Pipe Temperature Limiter	715°C (plus 5°C minus 0°C) (This is to allow for jet pipe temperature limiter creep with altitude and to prevent the jet pipe limitations being exceeded in flight).
Air/Fuel Ratio Control	The acceleration control has been set during ground run to give stall-free slam.

Accelerations from 40% r.p.m. (approach r.p.m.) to max. r.p.m. minus 2% r.p.m. against the following air temperature time scale.

Ambient Temperature	Acceleration Time in Seconds
0° C and below	4.5 to 5
0° C to 5°C	5 to 5.5
5° C to 10°C	5.5 to 6
10° C to 15°C	6 to 6.5
15° C to 20°C	6.5 to 7
20° C to 25°C	7 to 7.5
25° C to 30°C	7.5 to 8
30° C and above.	8 to 10

Jet Pipe Maximum Temperature Limitations

Starting .....650°C (Nimonic 90) or 700°C (Nimonic 100)
Idling .....650°C
Max. Continuous .....650°C
Intermediate .....685°C
Take-off .....730°C

FUEL SYSTEM ADJUSTMENTS

Jet Pipe Temperature Limiter

Remove the aircraft rear fuselage.

Isolate the J.P.T.L. in the following manner:-

1. Disconnect the outer pipe from the J.P.T.L.
2. Fit suitable blanks to the pipe and J.P.T.L.

Ensure the aircraft J.P.T. gauge is calibrated correctly.

Fit temporary (ground) trimmers, one by one to the jet pipe nozzle until the J.P.T. is above 720°C, but does not exceed 725°C when the engine is running at full throttle.

Re-connect the J.P.T.L. and set as follows :-

Run the engine at full throttle and note J.P.T.

If the temperature is too high screw 'OUT' the adjuster, and vice versa, until the desired figure of 715°C $\left\{ \begin{matrix} +5^{\circ}C \\ -0^{\circ}C \end{matrix} \right\}$ is obtained.

Remove cap nut, hold adjuster and slacken locknut.

Turn adjuster carefully with screw driver, hold and tighten locknut (1° turn of adjuster results in approximately 1°C. J.P.T.)

Re-check the setting.

Remove temporary trimmers.

Fuel Pump Governor

If the anbient temperature is below + 4°C. isolate the Pressure Ratio Limiter.

1. Disconnect the servo pressure pipe (fitted between the pressure ratio limiter (P.R.L.) and the barometric pressure control chamber of the combined control unit) at the P.R.L.
2. Fit suitable blanks to the pipe end and P.R.L.

Isolate the jet pipe temperature limiter :-

1. Disconnect the outer pipe from the limiter.
2. Fit suitable blanks to the pipe end and J.P.T.L

Run the engine at full throttle and note maximum R.P.M. (correct this figure for gauge error, if any).

Caution .....

CAUTION: Carefully observe the jet pipe temperature limitations.

Adjust the governor as required to obtain the correct setting of 100% $\left(\begin{matrix} +\ 0\% \\ -\ .25\% \end{matrix}\right)$ r.p.m.

NOTE Screw in the adjuster to increase r.p.m. One turn will give a change of 7% approximately.

Re-connect and wire lock the pipe to the J.P.T.L and the servo pressure pipe to the P.R.L.

Idling R.P.M.

With the engine warm, retract the throttle lever to START and FLIGHT IDLE. The R.P.M. should be 35% $\left(\begin{matrix} +\ 1\% \\ -\ 0\% \end{matrix}\right)$

If necessary reset the pilots throttle lever start and flight idle stop, then recheck the engine R.P.M.

If there is insufficient adjustment at the throttle stop, recheck the throttle linkage. If the linkage is set correctly, adjust the idling by-pass valve on the C.C.U. to obtain the required R.P.M. Screw in to decrease R.P.M. and vice versa.

Air Fuel Ratio Control

Open up to maximum r.p.m. position and note r.p.m. obtained.

* Set the throttle lever to obtain 40% r.p.m.

* Slam the throttle lever to the OPEN position, and check time taken to reach maximum r.p.m. minus 2%.

Repeat items marked * a further three times to obtain the average acceleration time.

If the acceleration time exceeds that specified, screw the adjuster IN. If the time is shorter, screw the adjuster OUT.

Note 1.

A half turn of the adjuster will alter the acceleration time by approximately one second.

Note 2

On later engines this is a "clicker" adjustment. Make sure that the "Clicker" is engaged correctly after making an adjustment.

* * Slam accelerate the engine four times from 40% r.p.m. and check that the engine does not stall.

Check for .....

* * Check for stall-free acceleration from intermediate r.p.m.

1. Open up to full throttle, decelerate rapidly, and as the r.p.m. fall through 50% reslam the throttle to OPEN.
2. Repeat item 1. twice, but re-slamming the throttle as the r.p.m. fall first through 60% then secondly through 70%.

Note If an engine stall occurs during any of the acceleration checks in items * * re-adjust the A.F.R.C. to lengthen the acceleration time by half a second, then re-check.

Pressure Ratio Limiter

This is normally rig-set and is not adjusted in the aircraft, for the setting will allow maximum conditions to be obtained up to 30,000 ft. Above 30,000 ft this rig setting may limit engine performance. If a check on the P.R.L. setting is required adopt the following procedure :-

Isolate the A.F.R.C. (disconnect and blank the servo connection).

Isolate the J.P.T.L.

Notify the pilot that the above units have been isolated. All subsequent movements of the throttle must be slow and smooth to prevent engine stall.

Observe the J.P.T. and r.p.m. limitations.

Obtain the meteorological forecast of the prevailing ambient temperature at 35,000 ft. and 30,000 ft.

When pilots pro forma has been completed transfer the data obtained to the graph and establish the adjustment required (if any) to obtain the correct setting.

(One turn of the adjuster = $400 \frac{N}{\sqrt{\theta}}$ approx. Screw 'OUT' to increase and vice versa).

BRISTOL SIDDELEY ENGINES LTD.

AERO ENGINE SCHOOL

PILOTS PRO FORMA

FIAT G-91 .....

ENGINE NO: .....

DATE .....

TIME OFF TAKE-OFF .....

TIME AND TEMP. °C.
OF MET. FORECAST .....

Full throttle tests at 35,000 ft. and 30,000 ft. at 0.6 (± 0.01) Mach No. (to check P.R.L. setting)

CAUTION :- Avoid using full throttle for longer than necessary to check the max. r.p.m.

Altitude (ft:)	Mach. No.	Max. r.p.m. (observed)
35,000		
30,000		

1. NOTE For the P.R.L. check, the time of take-off and time of meteorological forecast to be within six hours.

2. NOTE If surge or flame-out occurs, note the altitude, air speed and r.p.m. and abandon the test.

Full throttle level at between 5,000 ft and 10,000 ft (to check r.p.m. governor setting).

Altitude (Ft.)	I.A.S. (Kts)	R.P.M. OBS.

646

SECTION 4
CONTENTS

1 AIR INTAKE DUCT

2 INTAKE CASING AND GEAR CHAMBERS

3 COMPRESSOR CASING

4 COMPRESSOR ROTOR

5 COMPRESSOR DELIVERY CASING

6 COMBUSTION CHAMBER CASING

7 COMBUSTION CHAMBER

8 TURBINE

9 EXHAUST CONE

10 JET PIPE

BRISTOL AERO-ENGINES LTD.

AERO ENGINE SCHOOL

11 JET PIPE SHROUD

12 OIL TANK

13 OIL PUMPS

14 LUBRICATION SYSTEM

15 AIR SYSTEM

16 ENGINE STARTER

17 IGNITER PLUG

18 PERCENTAGE TACHOMETER GENERATOR

19 HYDRAULIC PUMP

20 GENERATOR

KEY

1. Pitot head.
2. Starter gas delivery pipe location (No. 2).
3. Nose support.
4. Starter gas delivery pipe location (No. 1).
5. Starter exhaust pipe flange connection.
6. Sealing ring.

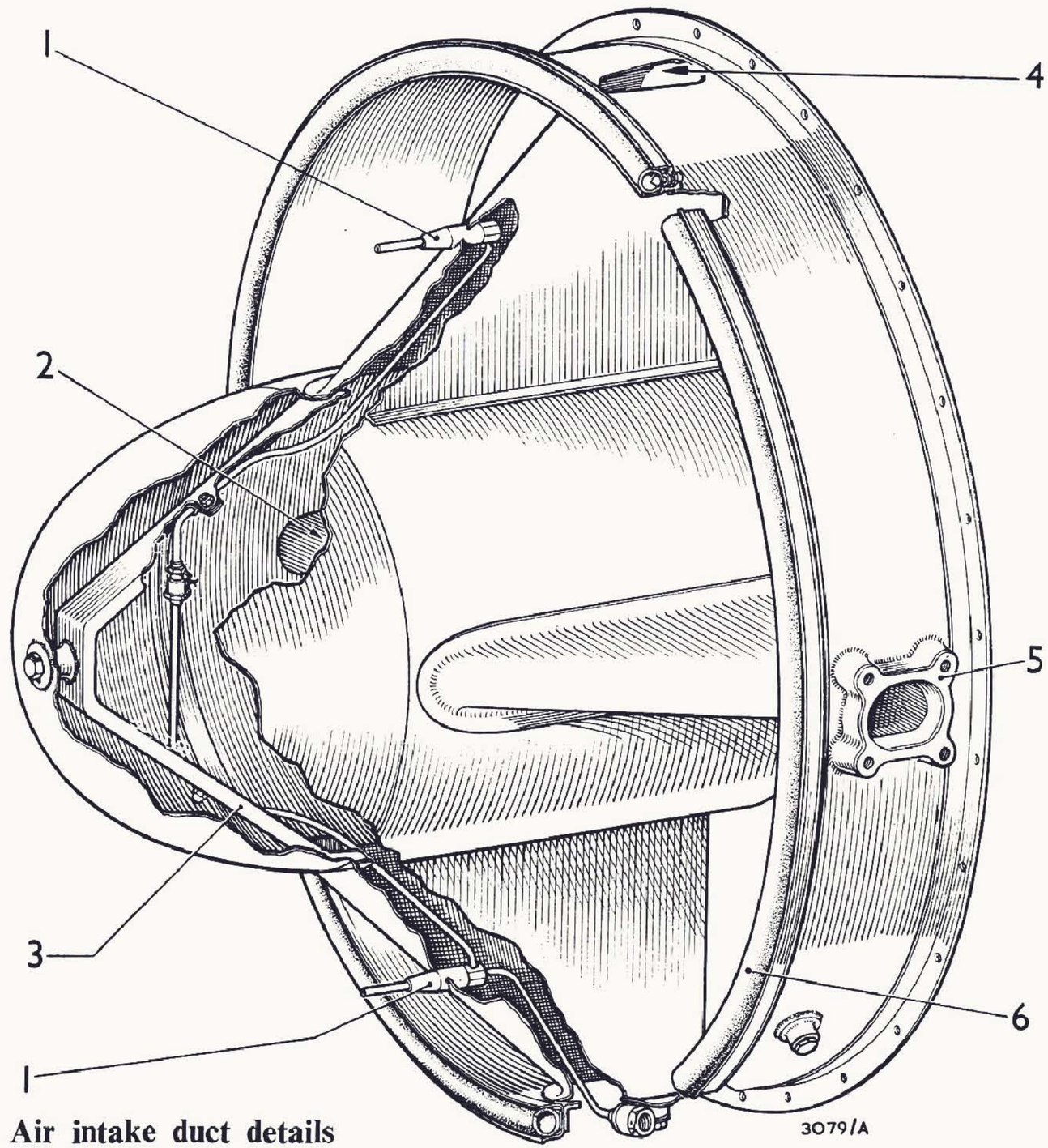

Air intake duct details

AIR INTAKE DUCT.

Of fabricated light alloy construction, the air intake duct has a centrally-disposed bullet attached to the casing by four equally - spaced hollow vanes. The bullet has a detachable nose and serves as a fairing for the turbo-starter (fitted to the front face of the air intake casing) and also streamlines the entry to the air intake casing where it abuts the inner casing.

To facilitate identification, the vanes are numbered in a clockwise direction when viewed from the rear (No1 being at the top) and are utilised as follows:-

No1. Houses one starter gas delivery pipe from No1 cartridge breech and mounts a pitot head for the barometric pressure control.

No2. Houses the starter gas delivery pipe from No2 cartridge breech.

No3. Mounts the second pitot head for the barometric pressure control and the delivery connection from both pitot heads to the control.

No4. Accomodates the starter exhaust pipe.

At the front end of the duct, a forward facing channel houses a circular-section synthetic rubber ring which abuts the aircraft structure to seal the aircraft air intake system.

The detachable nose of the bullet is secured with a bolt to a box-section support welded to the bullet and provides access for the removal of the starter gas delivery and exhaust pipes. A balance pipe between the pitot heads is clipped to the nose support, the connection for the barometric pressure control being taken from the base of the intake duct.

At its outer end, the starter exhaust pipe in No4 vane is supported by two conical seatings with an interposed asbestos gland. The pipe terminates in a flanged spherical seating which accepts the aircraft portion of the exhaust pipe.

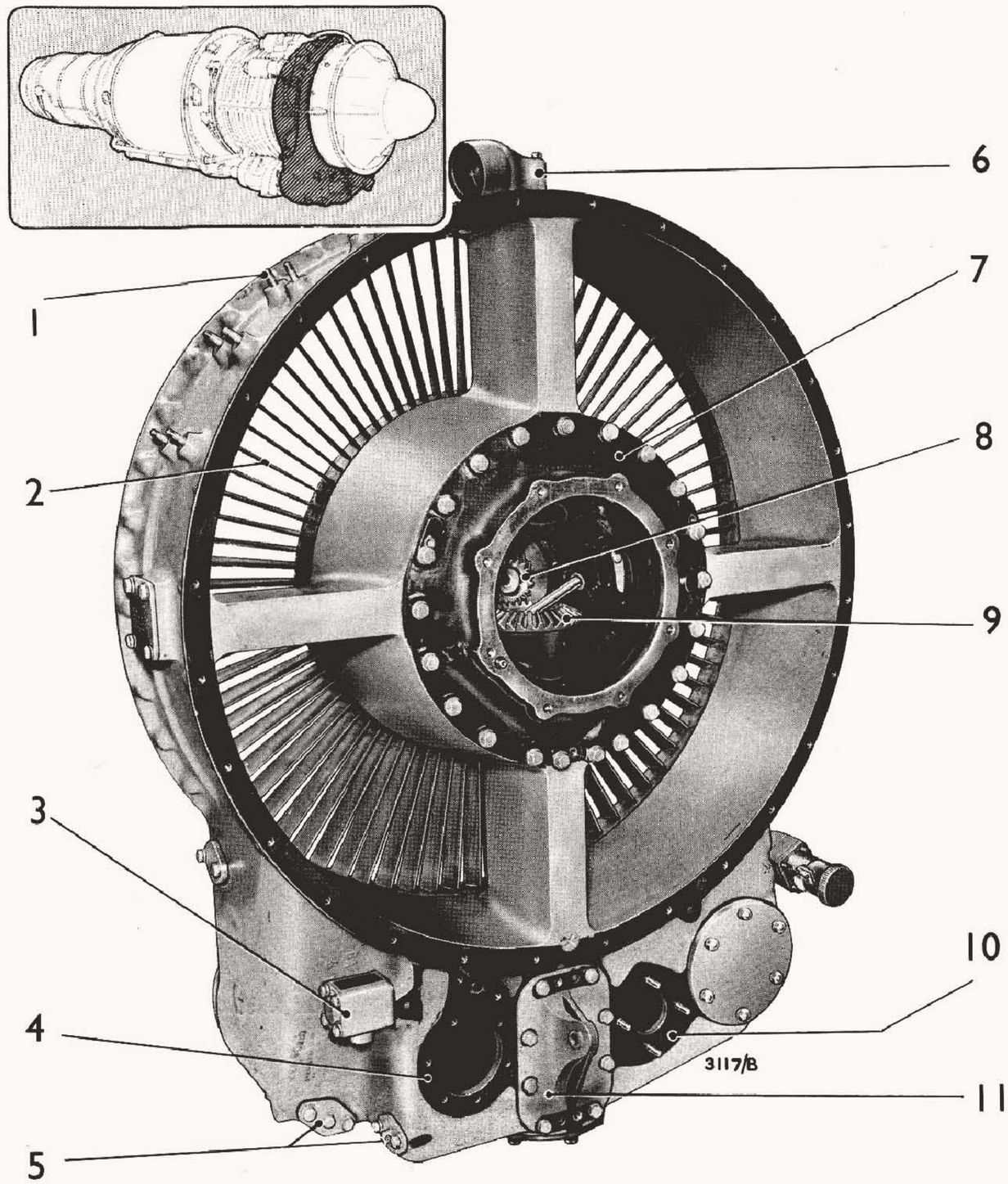

Fig. 5.—Air intake casing—front view

1. Cartridge breech locating studs.
2. Entry guide blades.
3. Oil low pressure warning switch.
4. Oil pump mounting face.
5. Scavenge oil filters.
6. Engine breather outlet elbow.
7. Drive mounting cone.
8. Driving bevel.
9. Driven bevel.
10. Percentage tachometer generator mounting face.
11. Mounting bracket (front).

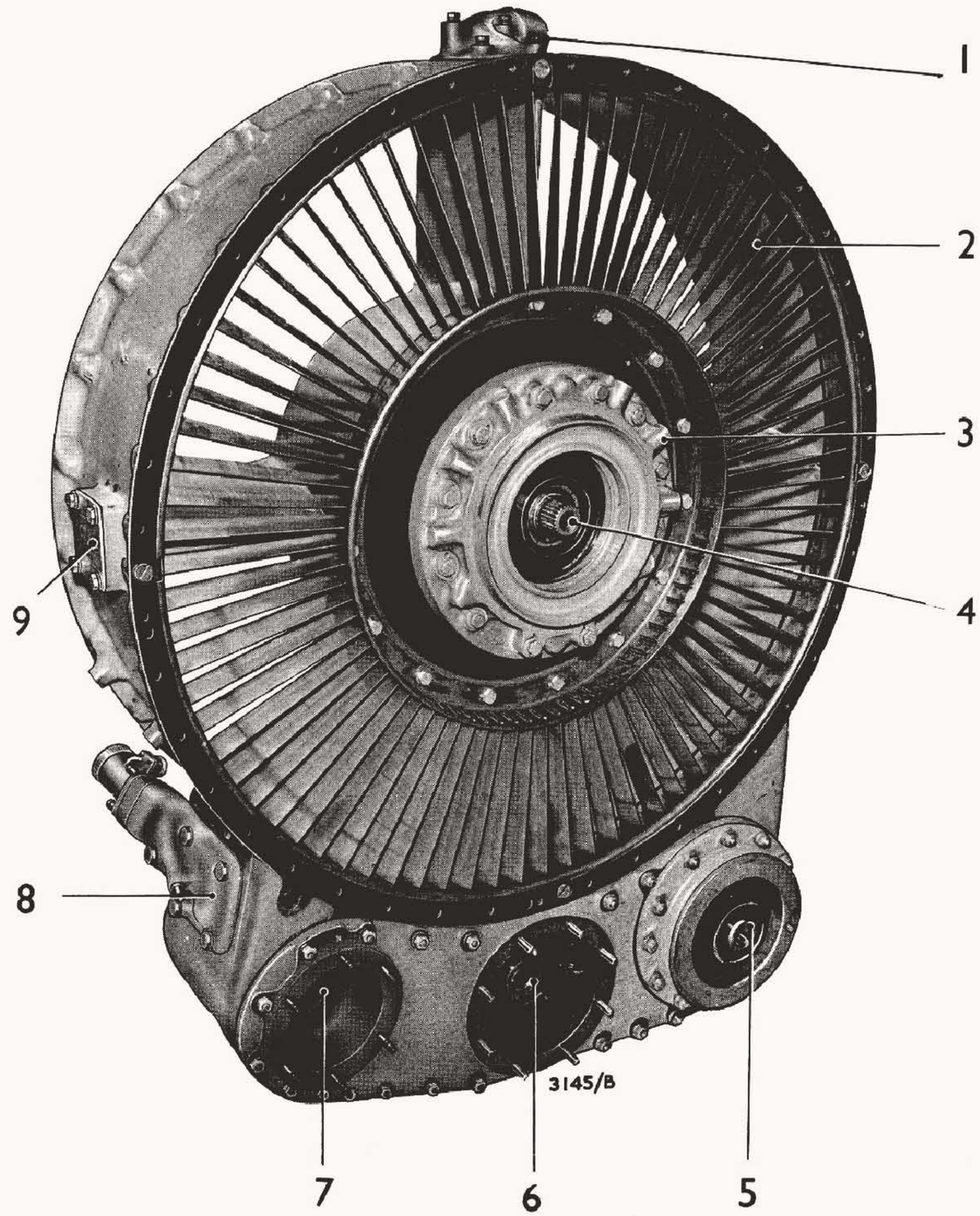

1. Engine breather outlet elbow.
2. Entry guide blades.
3. Bearing cover.
4. Quill shaft.
5. Generator mounting face.
6. Fuel pump mounting face.
7. Hydraulic pump mounting face.
8. Pressure oil filter and metering pump cover.
9. Bearing seal vent.

Fig. 6.—Air intake casing—rear view

1. Cover plate.
2. Breather chamber.
3. Drive mounting cone.
4. Driving bevel.
5. Driven bevel.
6. Vertical drive shaft.

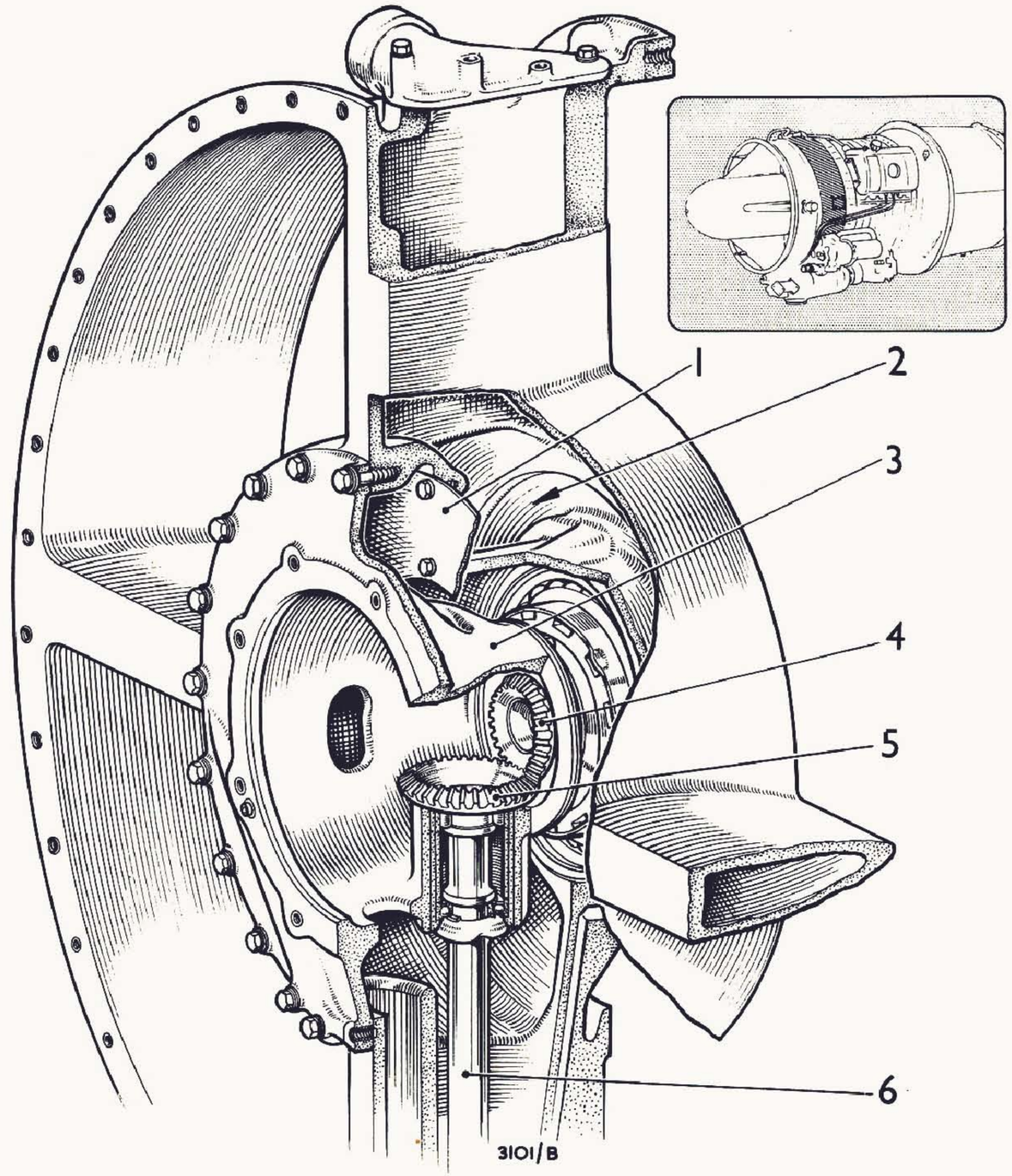

Fig. 9.—Details of initial drive to accessories

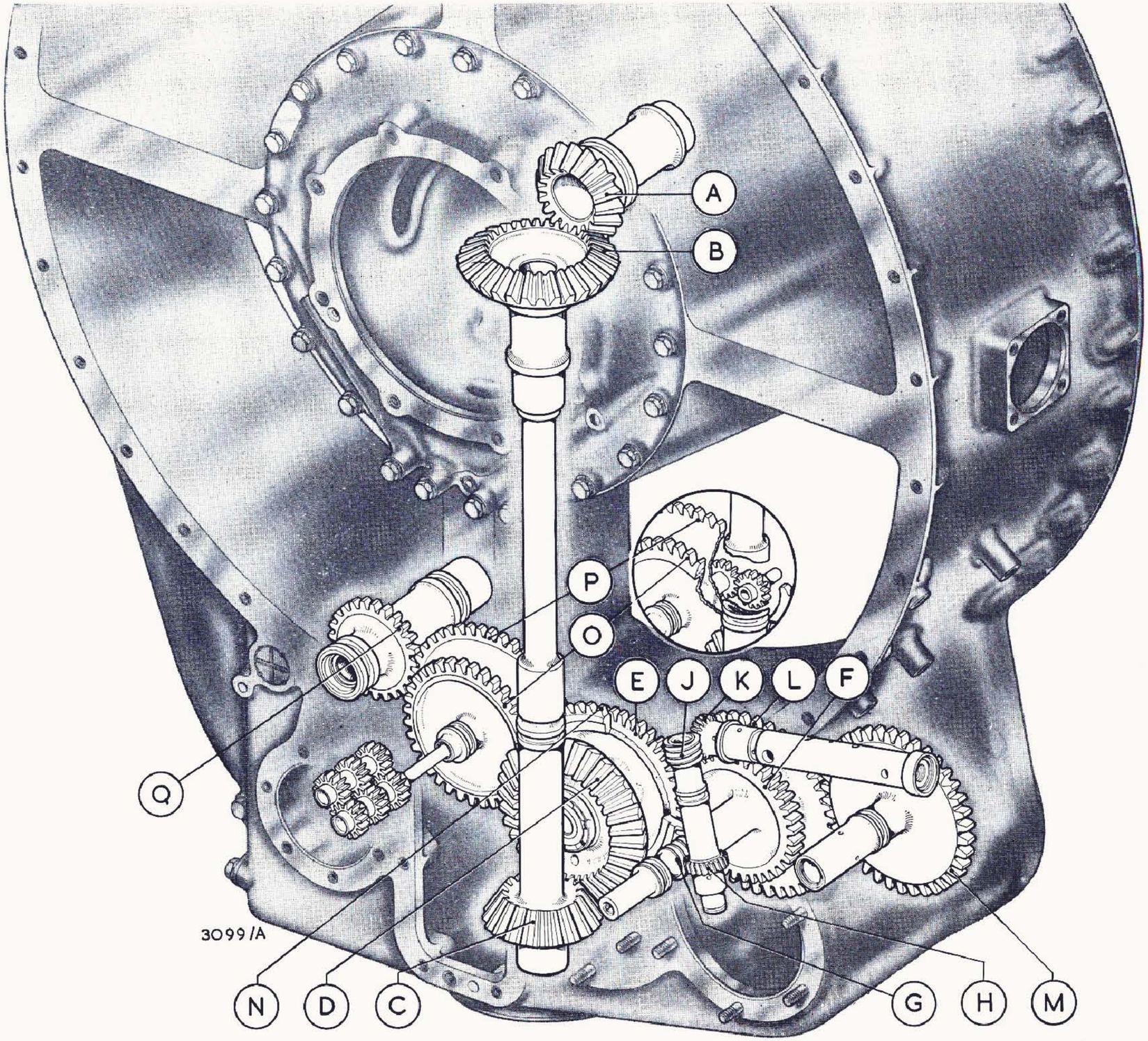

Gear train diagram

KEY TO GEAR TRAIN DIAGRAM

		No. of Teeth		Ratio relative to C.R.P.M.
	FUEL PUMP DRIVE			
	VERTICAL DRIVE SHAFT		$\frac{A}{B} = \frac{18}{30} =$	0·600
A	DRIVING BEVEL	18	$\frac{A}{B} \times \frac{C}{D} =$	
B	DRIVEN BEVEL	30		0·353
C	DRIVING BEVEL	20	$\frac{18}{30} \times \frac{20}{34} =$	
D	DRIVEN BEVEL	34		
	PERCENTAGE TACHOMETER GENERATOR DRIVE			
E	DRIVING GEAR	38	$\frac{A}{B} \times \frac{C}{D} \times \frac{E}{F} =$	0·419
F	DRIVEN GEAR	32	$\frac{18}{30} \times \frac{20}{34} \times \frac{38}{32} =$	
	METERING PUMP DRIVE			
G	DRIVING WORM	2	$\frac{A}{B} \times \frac{C}{D} \times \frac{E}{F} \times \frac{G}{H} =$	0·049
H	DRIVEN WHEEL	17	$\frac{18}{30} \times \frac{20}{34} \times \frac{38}{32} \times \frac{2}{17} =$	

		No. of Teeth		Ratio relative to C.R.P.M.
	METERING PUMP			
J	DRIVING WORM	2	$\frac{A}{B} \times \frac{C}{D} \times \frac{E}{F} \times \frac{G}{H} \times \frac{J}{K} =$	0·005
K	DRIVEN WHEEL	20	$\frac{18}{30} \times \frac{20}{34} \times \frac{38}{32} \times \frac{2}{17} \times \frac{2}{20} =$	
	HYDRAULIC PUMP DRIVE			
L	DRIVING GEAR	40	$\frac{A}{B} \times \frac{C}{D} \times \frac{E}{F} \times \frac{L}{M} =$	0·441
M	DRIVEN GEAR	38	$\frac{18}{30} \times \frac{20}{34} \times \frac{38}{32} \times \frac{40}{38} =$	
	MAIN OIL PUMP, SCAVENGE AND AUX. SCAVENGE PUMP DRIVE			
N	DRIVING GEAR	44	$\frac{A}{B} \times \frac{C}{D} \times \frac{N}{O} =$	0·444
O	DRIVEN GEAR	35	$\frac{18}{30} \times \frac{20}{34} \times \frac{44}{35} =$	
	GENERATOR DRIVE			
P	DRIVING GEAR	46	$\frac{A}{B} \times \frac{C}{D} \times \frac{N}{O} \times \frac{P}{Q} =$	0·887
Q	DRIVEN GEAR	23	$\frac{18}{30} \times \frac{20}{34} \times \frac{44}{35} \times \frac{46}{23} =$	

KEY

1. No. 9 bearing.
2. No. 8 bearing.
3. Generator drive shaft.
4. No. 7 bearing.
5. Oil pump and auxiliary scavenge oil pump drive shaft.
6. No. 6 bearing.
7. Oil pump mounting face.
8. Generator drive adaptor.
9. Auxiliary oil pump.
10. No. 5 bearing.
11. Accessories drive bevel.
12. Fuel pump mounting face.
13. Fuel pump drive shaft.
14. Percentage tachometer mounting face.
15. No. 4 bearing.
16. Percentage tachometer generator drive shaft.
17. Metering pump worm drive wheel.
18. No. 3 bearing.
19. Hydraulic pump mounting face.
20. No. 2 bearing.
21. Hydraulic pump drive shaft.
22. No. 1 bearing.

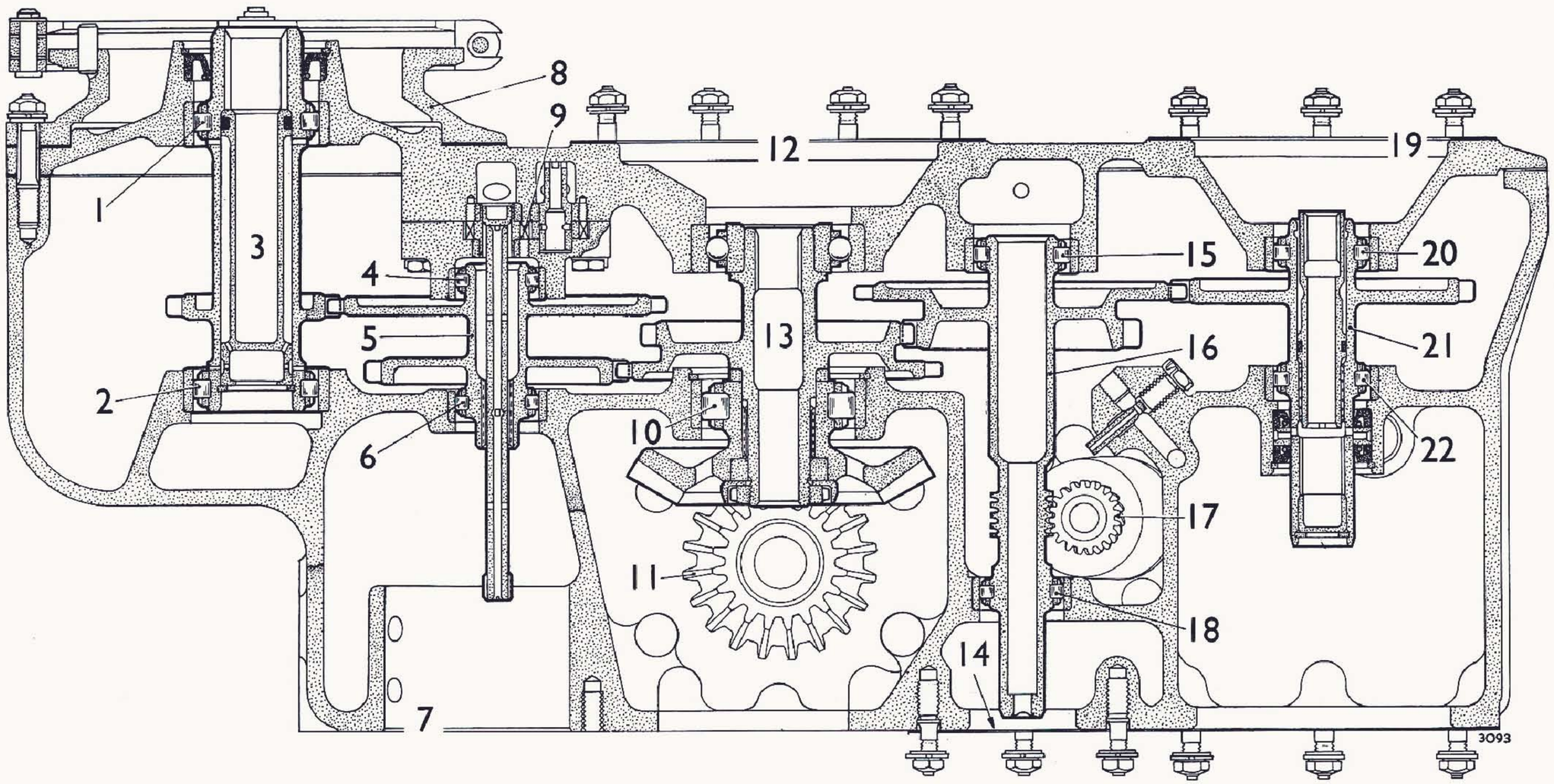

Section through gear chamber of air intake casing

1. Metering pump.
2. No. 13 bearing.
3. Metering pump drive.
4. Air intake casing.
5. Ball bearing.
6. Gear chamber cover.
7. Hydraulic pump drive.
8. Percentage tachometer generator drive.
9. Fuel pump drive.
10. Accessories drive bevel.
11. Auxiliary scavenge oil pump.
12. Oil pump and auxiliary scavenge oil pump drive.
13. Generator drive.

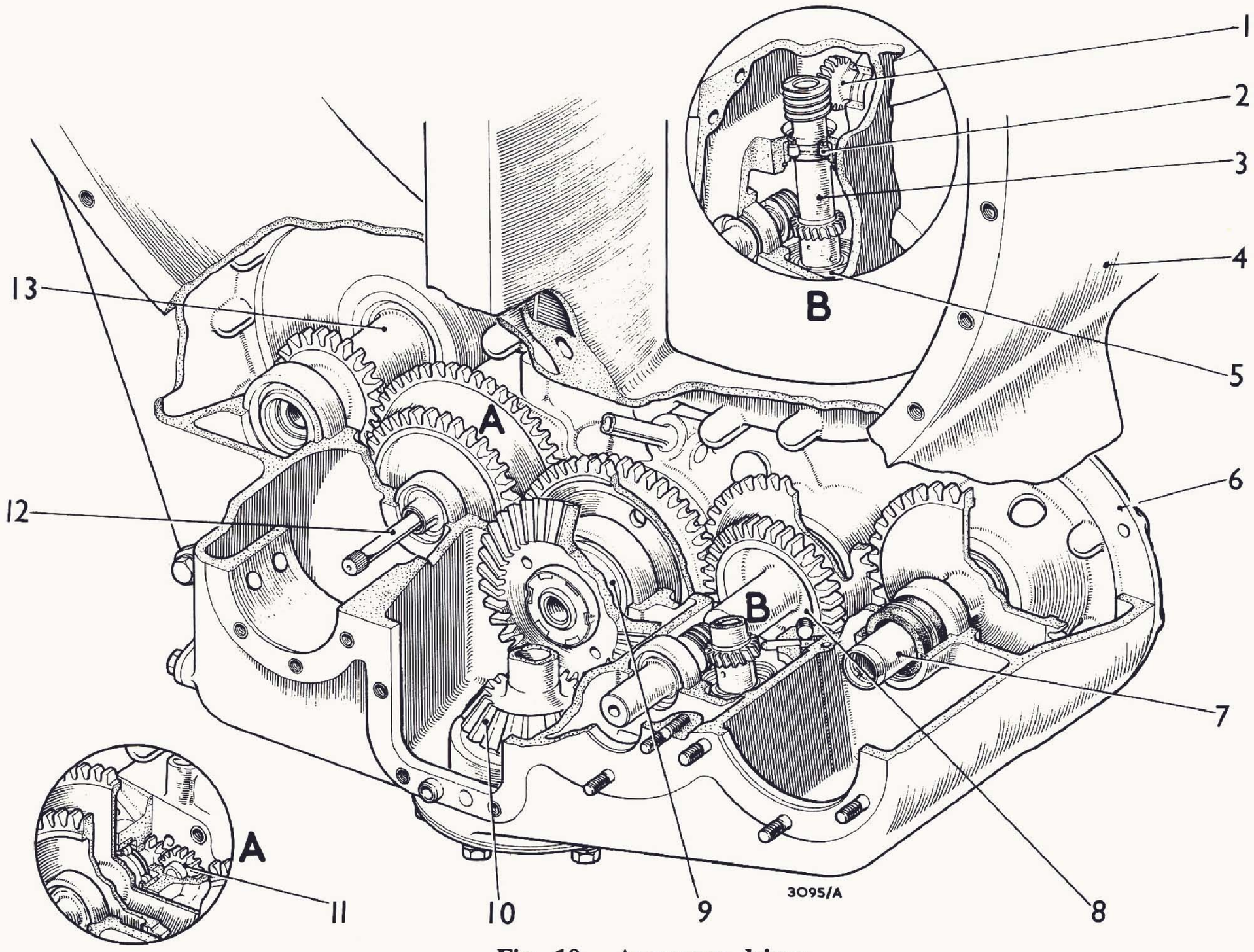

Fig. 10.—Accessory drives

INTAKE CASING AND GEAR CHAMBER

This casing which is secured to the forward face of the compressor casing provides a housing for the entry guide vane ring, through which air is directed to the compressor inlet, and a housing for the compressor thrust bearing, the gear chamber formed at the base houses the gear train for the engine driven accessories, which are mounted on the casing.

Description

The casing outer portion connects through four vanes (numbered 1 - 4 clockwise from rear, No.1 top) to the inner portion, and the annulus thus formed provides the inlet to the compressor.

The centre portion provides a housing for the bearing, and at its forward end a mounting face for the engine starter, a duct is provided in No.1 vane for venting purposes, and an air/oil separator, in the form of a stack of gauzes, is located on the entry to this duct, a passageway through Nos. 2 and 4 vanes provide a vent to atmosphere from the compressor front seal, through a perforated plate on each side of the casing.

A rectangular chamber at the bottom of the casing, forms a gear casing for the various drives, and also the engine sump, which is divided into two compartments front and rear, each compartment being served by its own scavenge pump.

Location of component drives on gear case reading port to starboard:-

Front Face

Hydraulic pump
Engine speed indicator generator
Engine Oil Pump

Rear Face

Hydraulic pump
Engine fuel pump
4 K.W. generator

Also located on the front face (Port side)

are the scavenge filters front and rear, and the oil L.P. switch. Submerged into the gear casing on its port side are the oil pressure filter and metering pump, and a port in the starboard face provides a vent connection for the oil tank.

COMPRESSOR CASING

The compressor casing is made up of two portions an upper and lower half which are joined at the horizontal centre line. Dove tail grooves machined in the bore provided location for the stator blade roots, and the casing is equipped on its end faces with locating dowels which fit into the intake casing at the forward end, and the delivery casing at the rear.

The rectangular blade roots are dove tailed to fit into the groove in the casing. In the case of the first two rows of blades spring wedges are inserted between each blade root and the casing, and a similar device is used on the end blades in each half of the casing in subsequent stages.

The blades are of aerofoil section and are diminished in length from front to rear.

Air is taken from the 5th stage lower half casing starboard side, to pressurise the turbine bearing. The oil tank is mounted on the port side of the upper casing, and the fuel component mounting bracket is secured to the underside of the lower half casing.

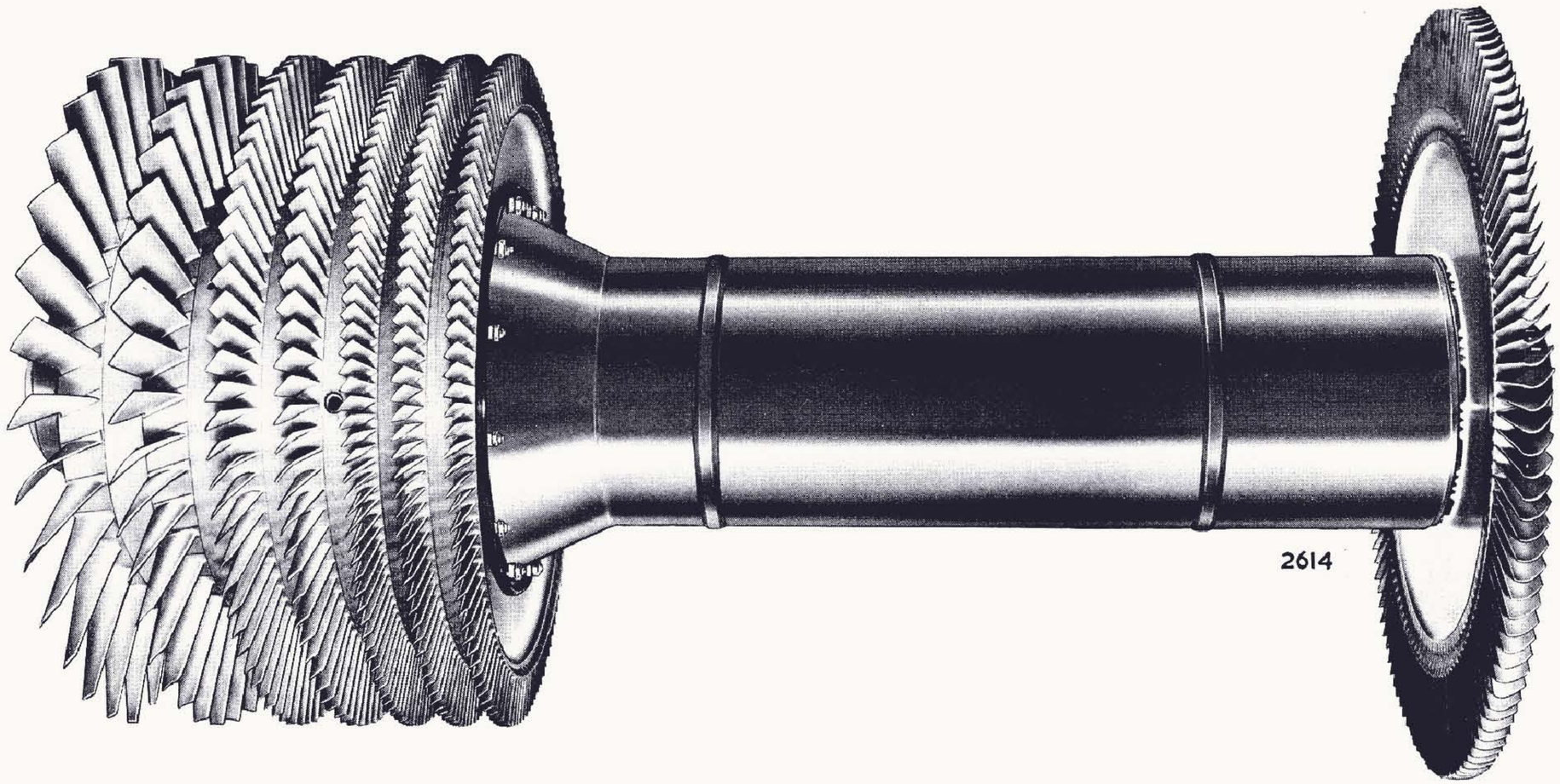

Main rotating assembly

1. Rotor centre (front).
2. Rotor front cone.
3. Air supply tube.
4. Compressor rear seal.
5. Turbine shaft.
6. Balancing bolts.

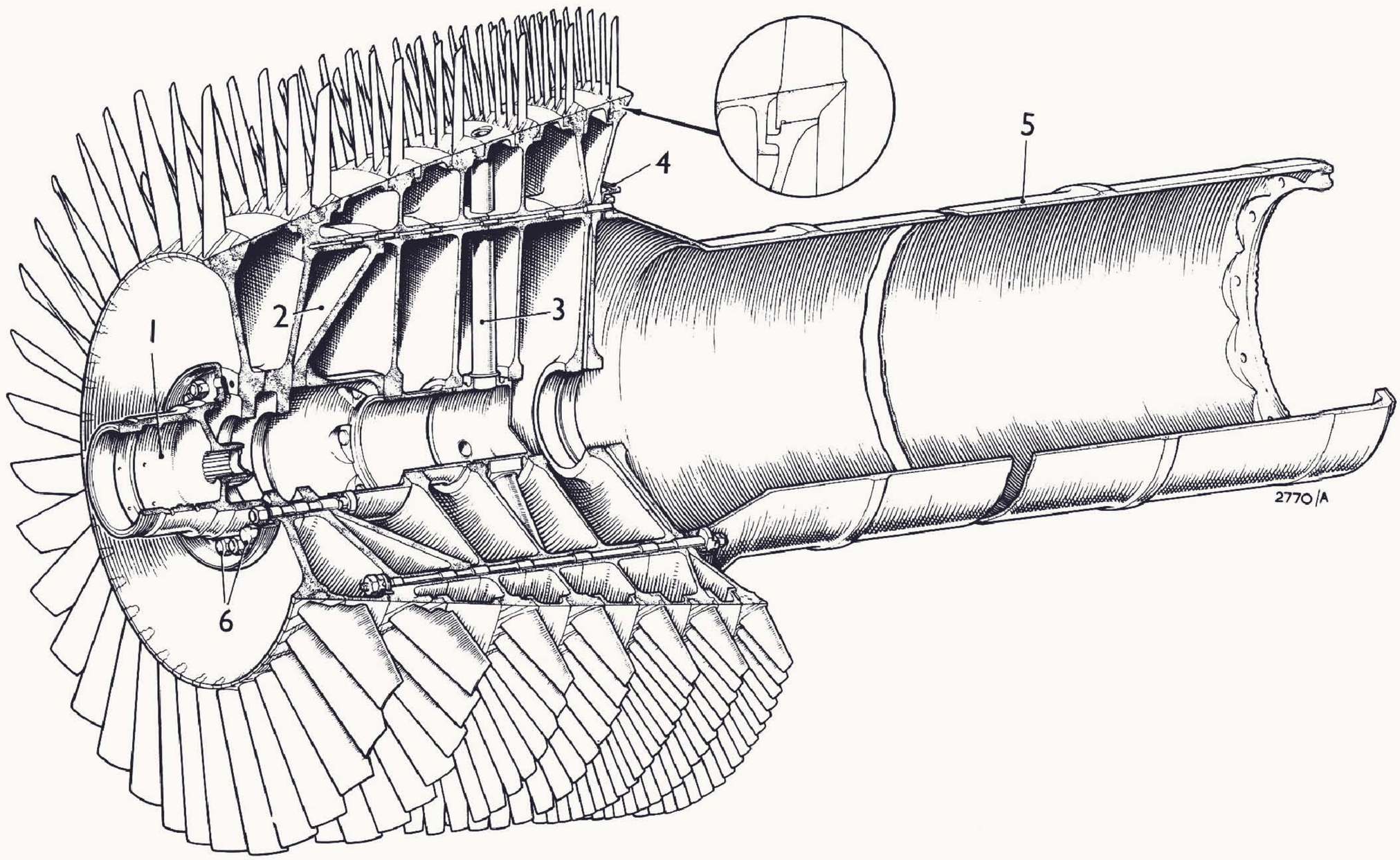

Fig. 22.—Compressor rotor and turbine shaft

COMPRESSOR ROTOR

This unit is of drum construction comprising seven drums which are separated by distance rings. The distance rings are located on the drums by dowels, and the drums themselves are dowelled to each other, the whole unit being clamped lengthwise by bolts.

The rotor centre which carries the intake bearing is secured by bolts to the first stage drum, and the rotor front cone.

The blades are secured to the drums with fir tree fixings, and are end located by the distance rings, special provision being made in this respect in the case of the front and rear blades by a tab formed on the blade roots.

Drillings in the distance ring at the fourth stage lead to three pipes radially disposed, which deliver air to the centre of the rotor assembly.

At its rear end the rotor is equipped with a labyrinth seal and is secured to the turbine shaft.

KEY

1. Air supply—aircraft services.
2. Igniter plug.
3. Compressor exit guide blades.
4. Engine mounting trunnion.
5. Outlet for fuel system pressurising air.
6. Burner.
7. Air supply—aircraft services.

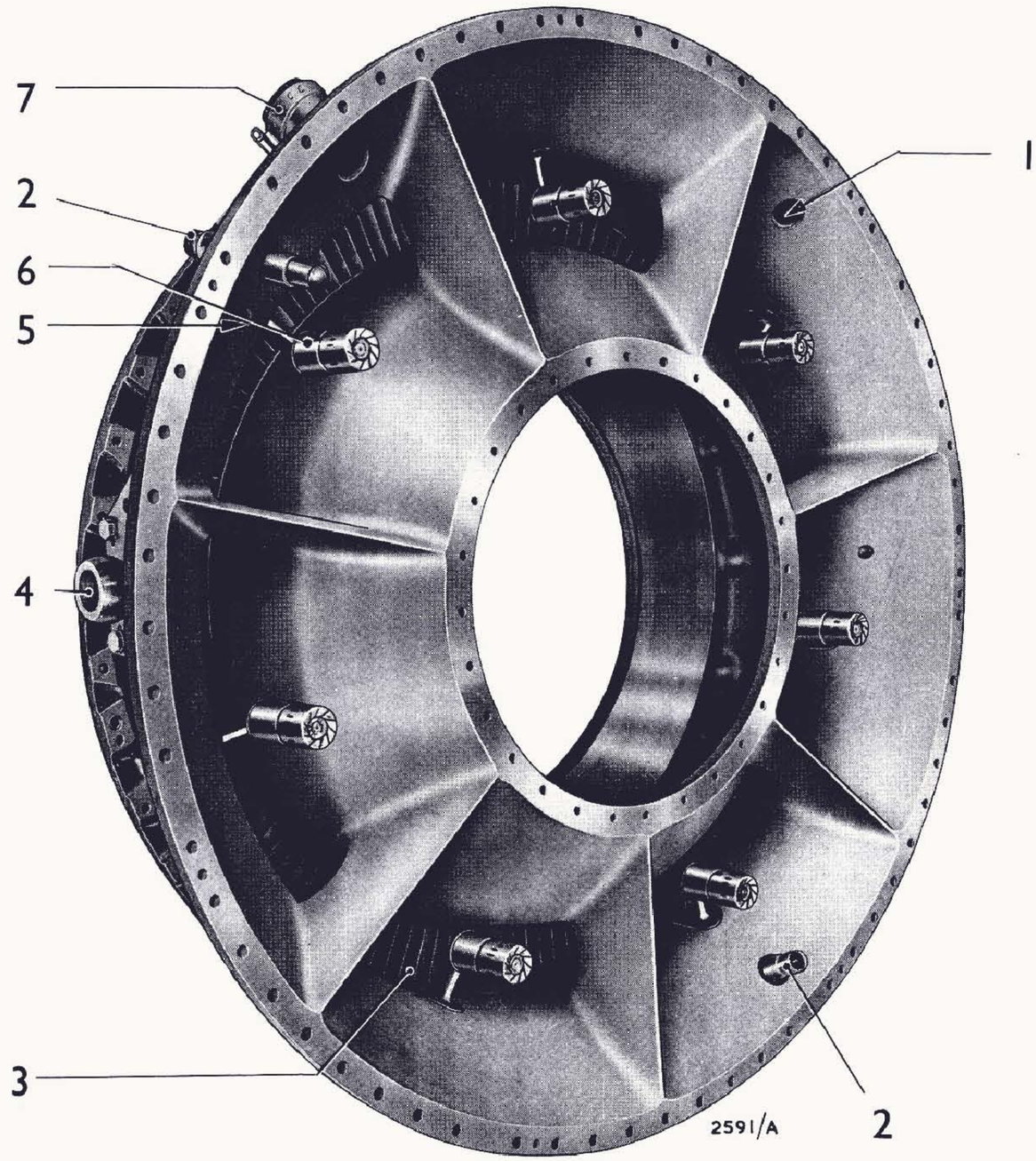

Delivery casing—rear view

KEY

1. Air bleed connection (aircraft services).
2. Igniter plug.
3. Air bleed connection (fuel tank pressurising).
4. Burner.
5. Engine mounting trunnion.
6. Connections of air/fuel ratio control.
7. Compressor exit guide vanes.

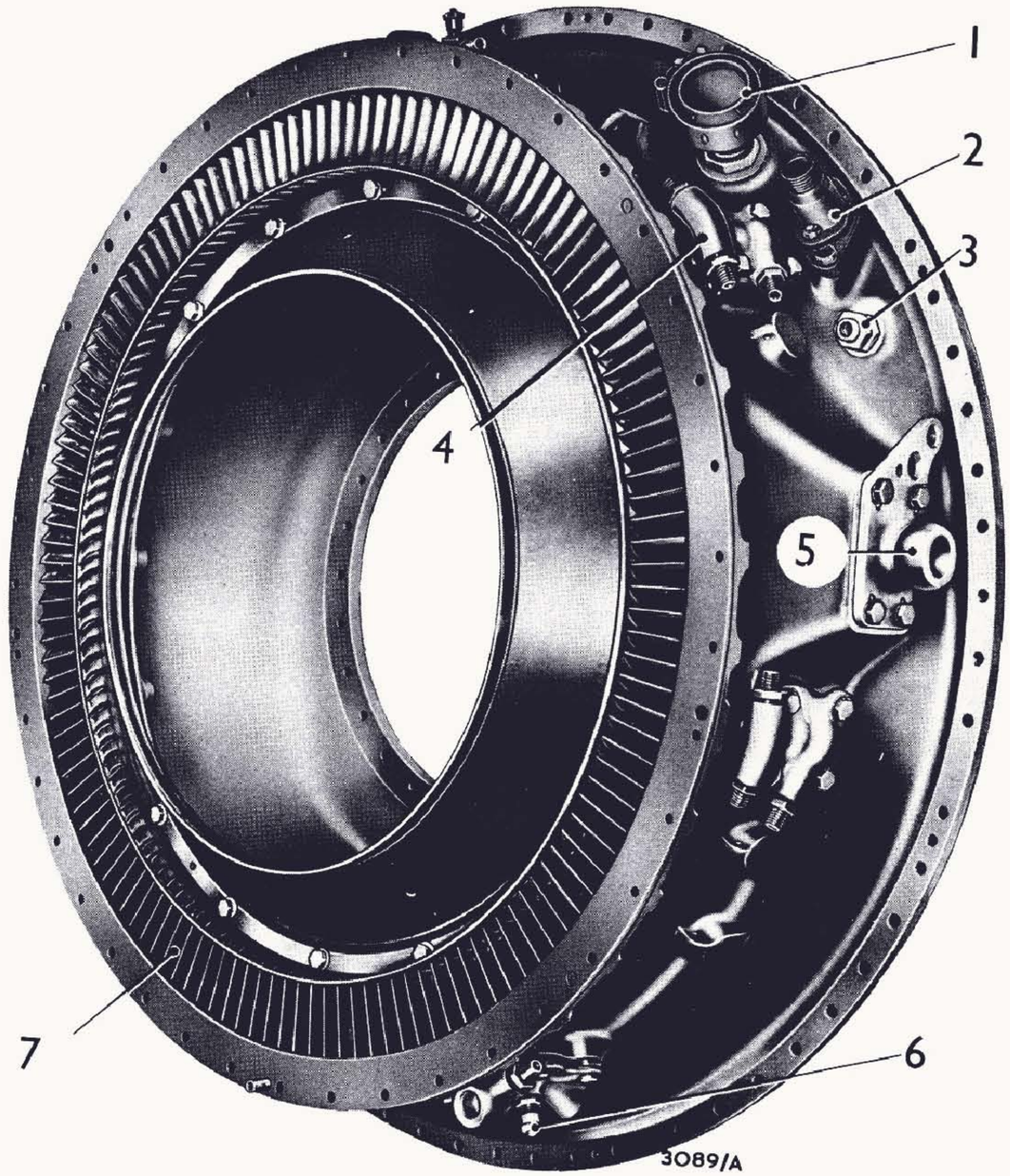

Delivery casing—front view

DELIVERY CASING

This casing which is an integral unit is virtually comprised of two conical shaped casings, one inner and one outer, which are secured together by seven vanes, thus two chambers are formed, one in the bore of the inner casing which provides a housing for the forward end of the turbine shaft, the other is in the form of an annulus between the casings, through which air from the compressor is delivered, the annulus so formed provides a divergent duct in the direction of flow.

Secured to the front face of the inner portion of the casing is the high pressure sealing diaphragm and the compressor exit guide vane rings, the latter also being recessed into the bore of the outer casing, the guide vane ring is positioned at the inlet to the annulus.

On the outside diameter of the casing there are three tappings near the top, one at each side of the vertical centre line to supply air for cabin pressurisation and one on the port side for fuel tank pressurisation, seven mounting faces are provided to which the burners are secured, and in the position adjacent to Nos. 4 and 7 flame tubes the igniter plugs are located.

The engine mounting trunnions are secured above the horizontal centre line on each side of this casing.

COMBUSTION CHAMBER CASING

The combustion chamber casing is made up from two cylindrical casings, an inner and outer, the one being concentrically located within the other to form an annular space in which the flame tubes are located.

Each of the casings is secured at its forward end to the delivery casing, the inner which is flared at its rear end, is equipped on its outside diameter at this point with a corrugated spring and piston type sealing ring, which seals off the bore of the turbine stator ring.

A spring loaded fuel drain valve located at the bottom of the outer casing, is held in the open position by the spring when the engine is stationary, and closes under the influence of engine pressure on starting; studs are provided on the rear face to secure the exhaust cone assembly, and a ring of holes in the flange accommodates the securing bolts for the jet pipe shroud.

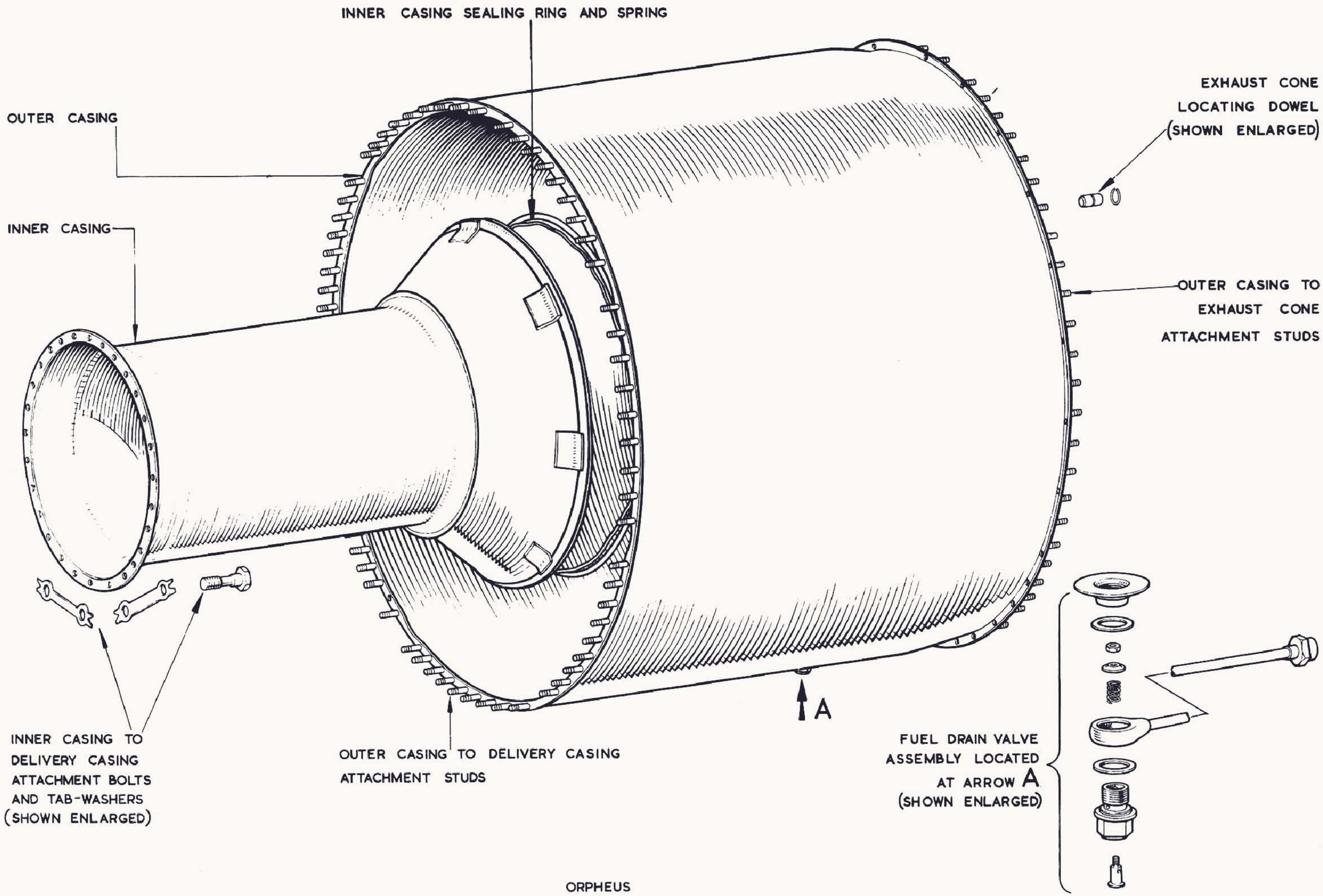

ORPHEUS

COMBUSTION CHAMBER CASING.

TP. 3224.

COMBUSTION CHAMBERS

These units are housed in an annular casing and are numbered one to seven in a clockwise direction from the rear, No: 1 being at the top.

The nose piece which is flared, is equipped at its forward end with a spherical locating bush through which the burner projects to provide the forward mounting for the unit, a baffle inside the nose piece acts as an air deflector, and provides the burner location, a swirler surrounding the burner orifice imparts a whirl component to the incoming air. At Nos: 4 and 7 positions only, provision is made in the nose piece for the fitting of the igniter plugs.

Rings of ports along the parallel position of the tube provide the inlets to the primary, secondary and tertiary zones, and further rings of small holes at intervals along its length deliver air to annular baffles formed on the inside, which deflect a cooling flow along the inner surface of the tube.

Interconnectors on each side of the primary zone connect adjacent tubes, for the purpose of spreading the flame during light up, and to balance the pressure.

Integral with the tube at its rear end is formed one segment of the turbine stator ring. The turbine stator stage is made from the segments, which are bolted together to form a ring, the passageway between the hollow blades forms a convergent duct on the inlet to the turbine wheel; the sealing ring located at the rear end of the combustion chamber inner casing, fits into the bore of the stator ring, to provide a seal at this point.

The flame tubes are freely mounted to allow for linear and radial expansion.

KEY

1. Nose support.
2. Swirler.
3. Igniter plug location (No. 4 and 7 chambers only).
4. Outer flare.
5. Cooling rings.
6. Turbine stator segment.
7. Turbine entry duct.
8. Flame tube.
9. Interconnector.
10. Spacer segment.
11. Inner flare.

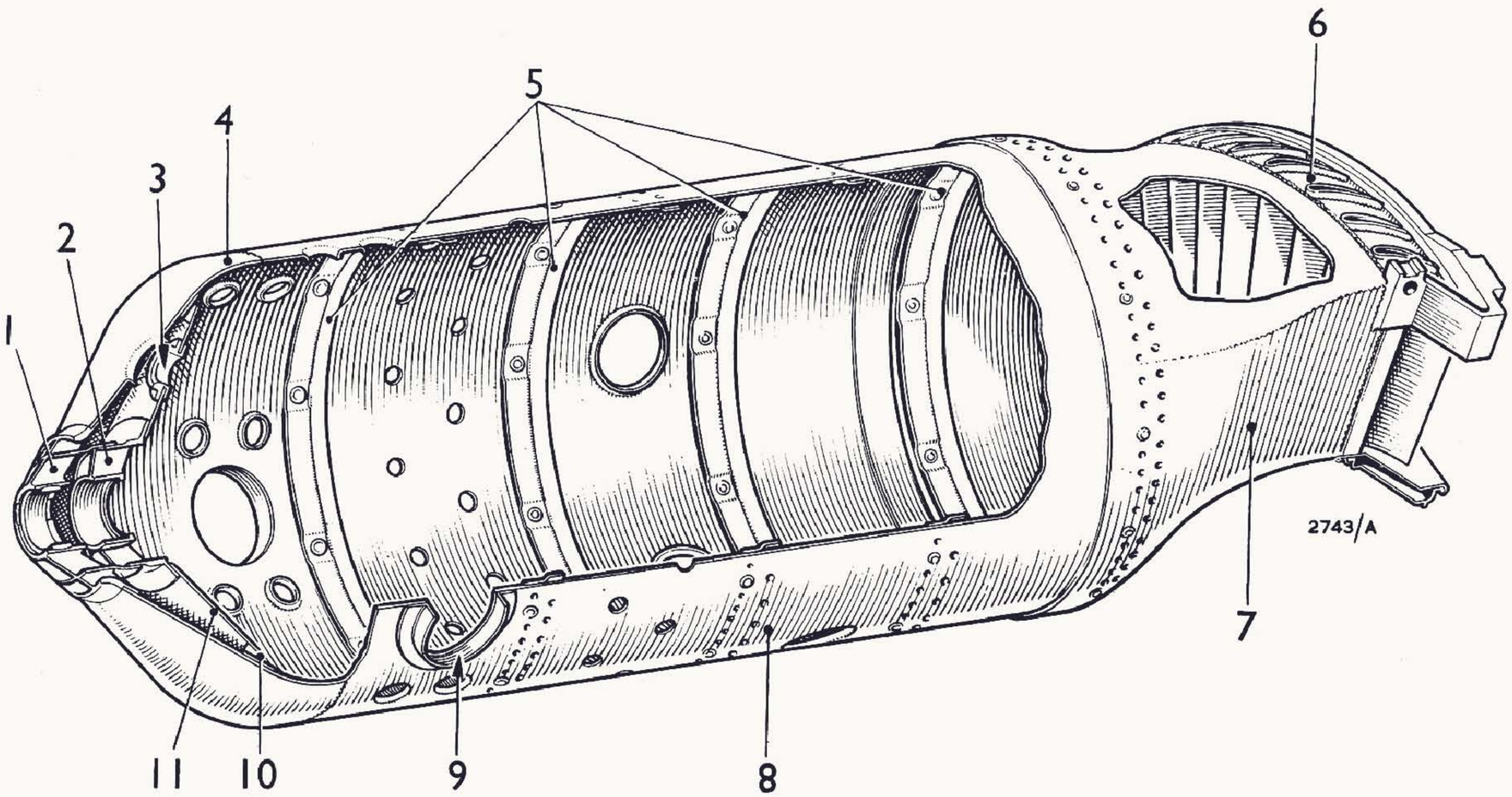

Combustion chamber details

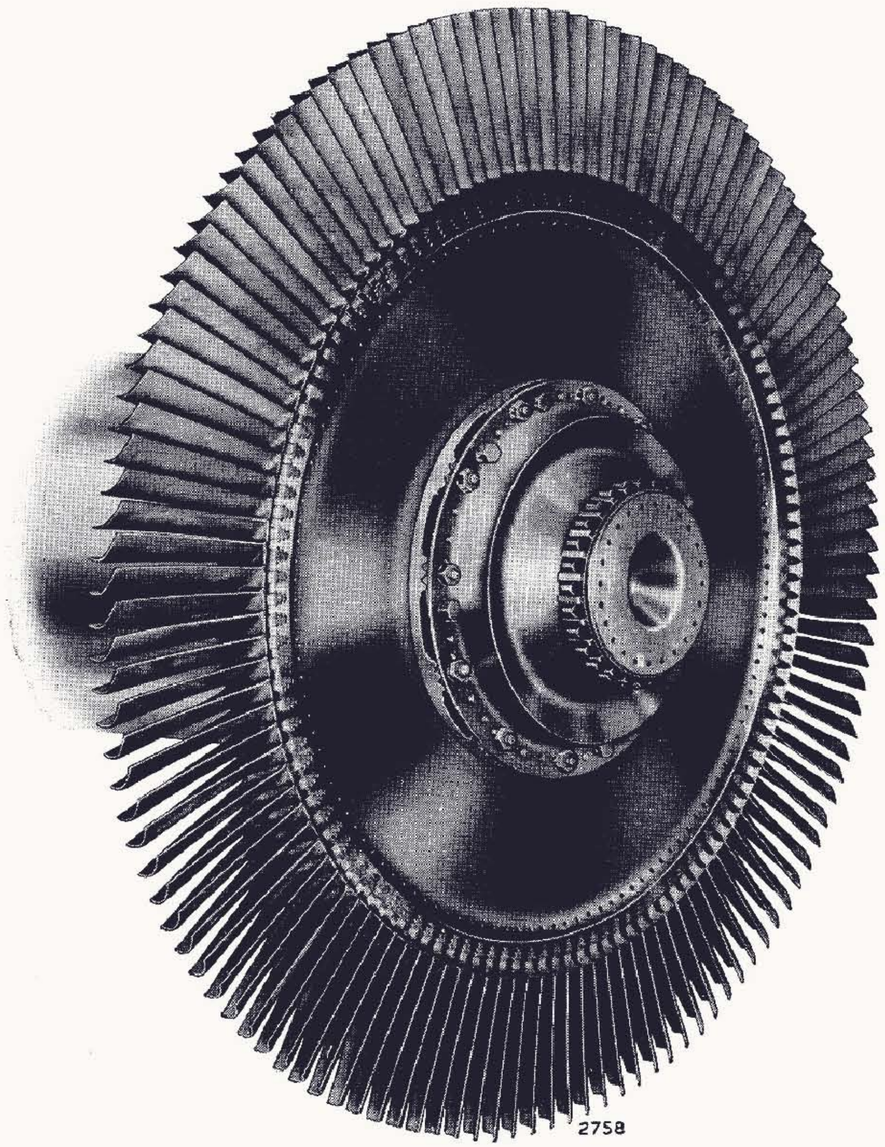

Turbine rotor

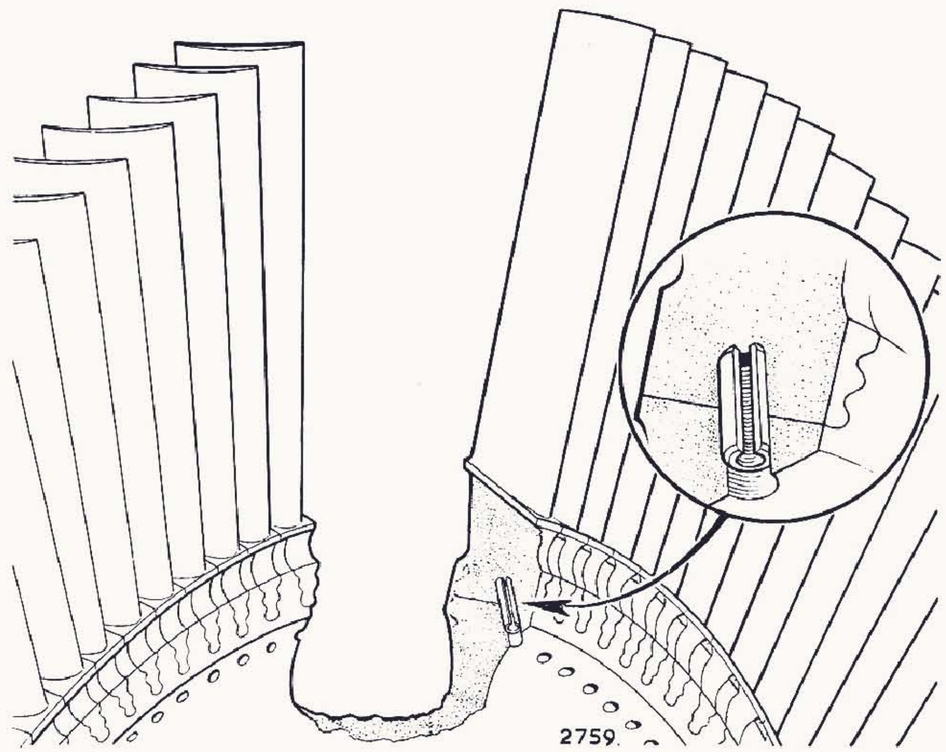

Method of securing turbine rotor blades

TURBINE.

This comprises a disc which is equipped with serrations on its front and rear face near the hub to form a "Hirth" coupling, with the turbine shaft at the front, and the rotor centre at the rear, fir tree slots are provided around the rim to receive the blade roots, and diagonally drilled holes in the rear face house the blade locking pins.

The blades, which are forgings, are of aerofoil section, and have fir tree fixings at the root, a locating tab at the forward end of the root, and a locking pin fitted into a hole in the base, provide the locking for the blades to the wheel, a space between the blade roots provides a passageway for cooling air across them.

The rotor centre provides the mounting for the rear bearing, which is positioned by adjusting washers and secured with a circlip, provision is made with threaded holes in the flange for fitting a balancing bolt if required, and a rim around the outside diameter is located in front of the bearing to act as an oil thrower, a bearing liner located in the bore of the rotor centre is secured by tabs at the forward end.

The turbine shaft, turbine wheel and rotor centre are secured together by bolts and nuts.

EXHAUST CONE

This casing is comprised of two cones, an inner and outer, concentrically located, and connected by eight cambered vanes to form an annular exit from the turbine, the outer cone is flanged at its forward end, and is secured together with the shroud support flange to the studs at the rear of the combustion chamber outer casing; to ensure correct positioning the casing is dowel located.

The shroud support flange is bolted on its rear face to the exhaust cone. Slots on the outside diameter at the forward end locate the dogs formed on the stator ring rear face. The shroud support flange also carries the rotor liner.

The turbine outer race is housed in the bearing support diaphragm to which it is secured by a circlip, and a ring of bolts around the bearing housing secures the bearing cover at the rear. Tongues formed around the outside diameter of the diaphragm fit into slots on the front face of the inner cone, to which - together with the extension flange - it is secured with bolts.

The vanes are numbered from the top 1 - 8 in a clockwise direction from the rear, and at No: 4 position an air pipe is taken through the vane to connect up to the hole in centre of the bearing cover, a small bore pipe passes through the air pipe, to deliver oil through a jet on to the centre of an air and oil deflector plate which directs the oil on to the bearing. The oil supplied to this bearing is expendable, and is thrown across the turbine rear face into the jet stream.

The jet pipe bolting down studs on the rear face of the cone, are equidistant with the exception of two studs.....

of two studs at the top, which are shorter between centres than the remainder, to provide a master position for the fitting of the jet pipe.

The outside of the casing is shrouded by a Refrasil insulating blanket.

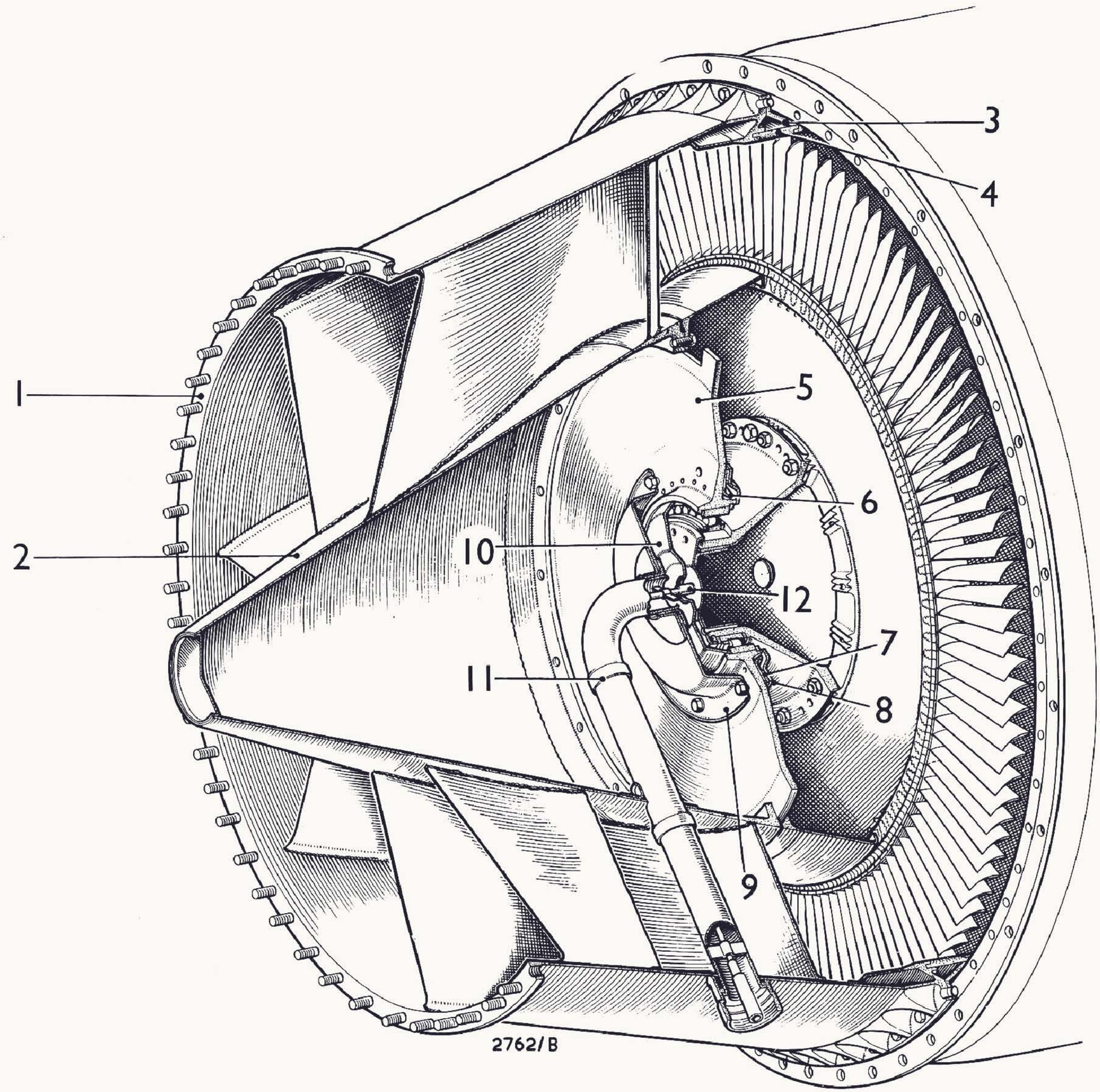

1. Cone.
2. Inner cone.
3. Support flange.
4. Shroud ring.
5. Bearing support diaphragm.
6. Spacer.
7. Air deflector.
8. Air deflector cover.
9. Bearing cover.
10. Oil deflector.
11. Air pipe.
12. Bearing oil feed pipe.

Exhaust cone details

JET PIPE AND SHROUD

JET PIPE

Fitted with a sonic propelling nozzle, the welded steel jet pipe is secured to the exhaust pipe. At the rear end two diametrally-opposed threaded bosses are welded to the outer surface to mount the thermocouples and an additional mounting flange is provided to accommodate a jet pipe temperature limiter, if required. Heat insulation Refrasil blankets, secured with springs and hooks, locate around the jet pipe to protect the shroud against excessive heat.

JET PIPE SHROUD

This fabricated component consists a light-alloy main body with a stainless steel inducer riveted to its rear end. A flange at the front forms the attachment by which the shroud is secured to the combustion chamber outer casing, a lighting eye being interposed between the five uppermost bolt heads.

Two diametrally-opposed apertures at the forward end of the shroud provide for shroud cooling.

On the forward lower right-hand side of the shroud, an integral elbow receives the generator cooling air outlet pipe, an "O" seal preventing leakage. Immediately to the rear of the elbow, an aperture receives the turbine rear bearing lubrication and cooling pipe connection which is secured to anchor plate nuts.

At the rear end of the shroud, two diametrally-opposed rectangular apertures give access to the thermocouples and have anchor plate nuts to accommodate a stiffener and mushroom headed securing bolts when the thermocouple harness is fitted. Between the two thermocouple apertures, on the right-hand side of the shroud,

an aperture mounts .....

an aperture mounts the thermocouple harness junction box. Immediately above the junction box aperture, a further aperture houses a jet pipe temperature limiter, if required.

Immediately forward of the right-hand thermocouple, provision is made for a static connection, but this is not normally used.

At the base of the shroud, an integral fuel well and drain tube housing is located to drain surplus fuel to atmosphere. Spring clips are rivited to the shroud skin to accommodate the thermocouple harness.

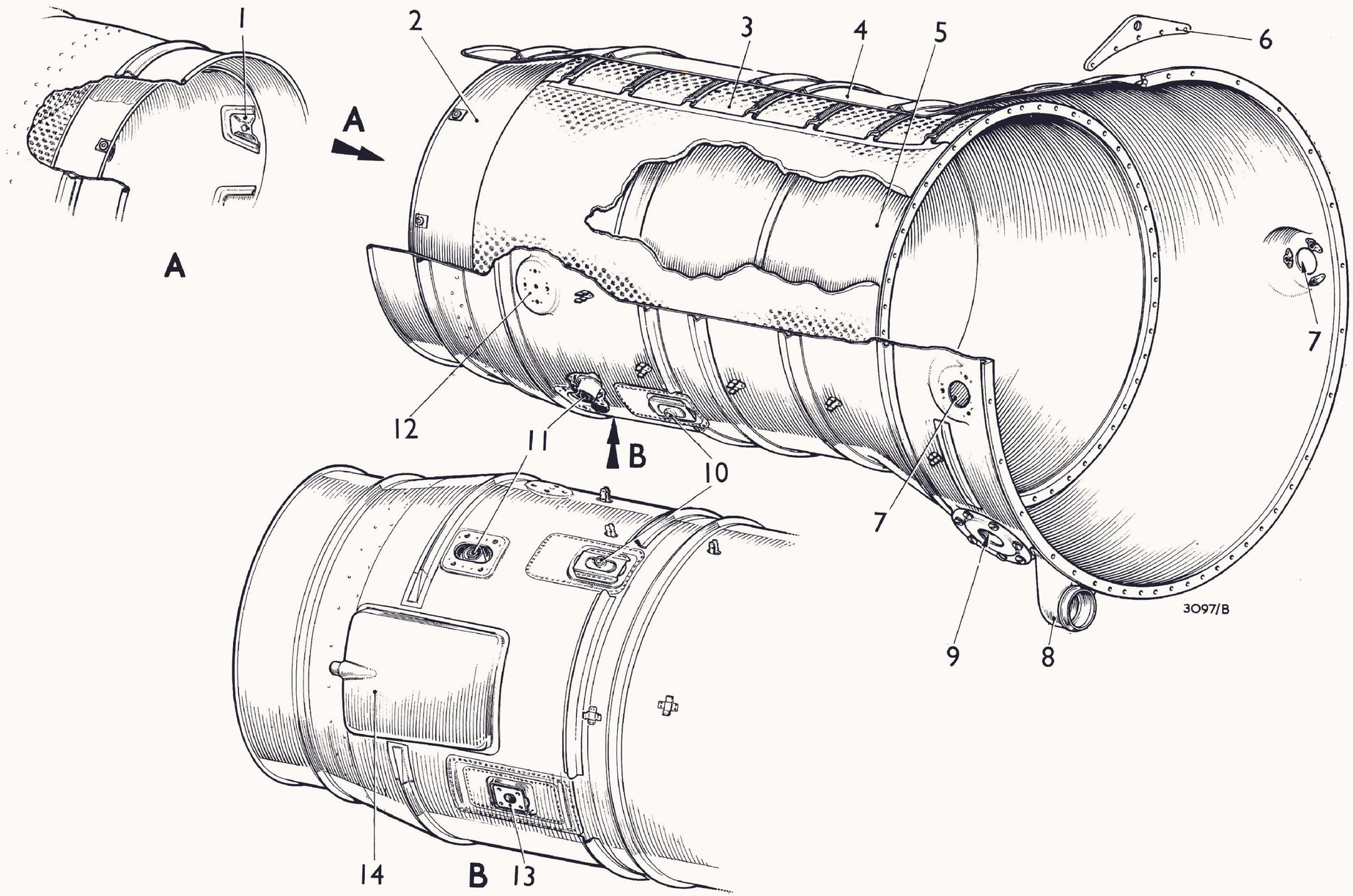

KEY TO FIG 34

1. Trimmer.
2. Propelling nozzle.
3. Insulating blanket.
4. Jet pipe shroud.
5. Jet pipe.
6. E.C.U. rear lifting bracket.
7. Shroud cooling air inlet.
8. Generator cooling air pipe outlet elbow.
9. Turbine air and oil pipe location.
10. Static air connection (blanked).
11. Thermocouple location.
12. Thermocouple harness junction box location.
13. Jet pipe temperature limiter location.
14. Jet pipe shroud drain tray.

A. View on rear of jet pipe assembly.

B. View at bottom of jet pipe assembly.

Fig. 34.—Jet pipe and jet pipe shroud details

KEY TO FIG. 61

1. Compressor casing (top half).
2. Vent connection.
3. Tank filler filter element.
4. Tank filler cap.
5. Dipstick location.
6. Stack pipe.
7. Drain valve.
8. Rear mounting.
9. Return to tank connection.
10. Delivery connection.
11. Compressor casing (lower half).
12. Front mounting.
13. Filler stack pipe.
14. Air intake casing.
15. Tray baffle.

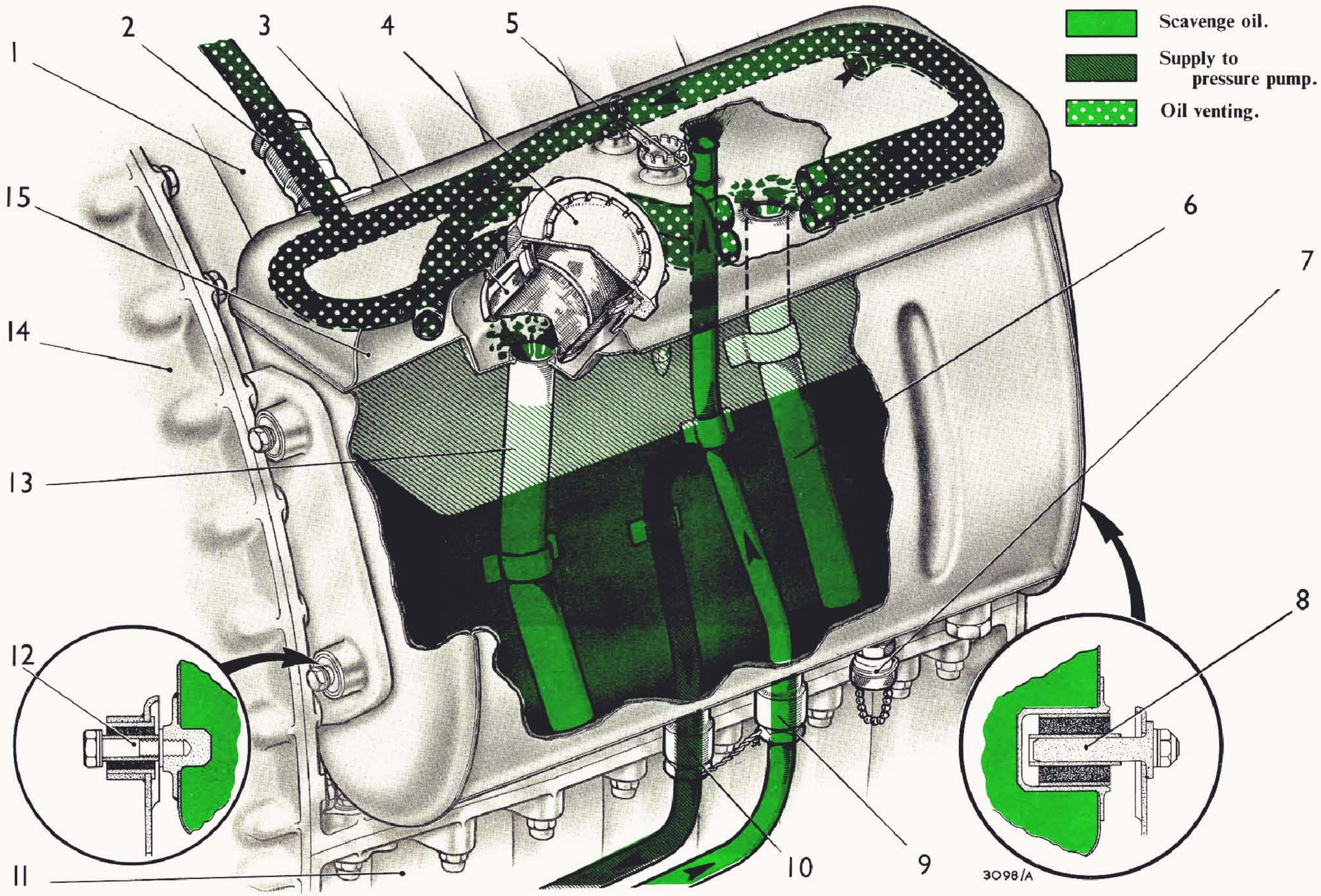

Diagram of oil tank

OIL TANK

This unit is specially shaped to fit around the compressor casing, to which it is secured on the top port side, the mounting at its forward end being provided by two rubber bushed trunnions on a bracket connected to the compressor casing, and at the rear end a single rubber bushed trunnion, which is also connected by a bracket to the compressor casing.

A gauze filter is located in the tank filler neck beneath the screwed filter cap, an O seal is provided around the filter at its locating point, and a further seal is located beneath the filler cap. Locking for the cap is provided by a spring clip which fits into the castellations on its upper face.

The dip stick is positioned adjacent to the filler point, an O seal prevents leakage at its location point in the tank, it is held in position by a spring clip which fits into the castellations on its upper face.

Venting for the air space in the tank is provided by two pipes whose ends are located in opposite corners at the top of the tank. These are connected to a common outlet at the top of the tank, which is connected by a pipe running around the starboard side of the intake casing to the gear chamber. This arrangement ensures adequate venting at all attitudes of the engine.

A baffle formed inside the tank at its upper end connects the air space with the main chamber, through two connector tubes. This baffle, with the tubes (which act as stack pipes when inverted) maintains the oil level during inverted flight.

At its base the tank is equipped with four connections - which, reading from front to rear, are:-

1. Oil supply .....

1. Oil supply to engine pump.

2. Oil return from engine pump.

3. Drain valve.

4. Thermometer bulb location.

A stack projects from the oil supply connection to a point just above the centre line of the oil chamber in the tank, and an external pipe around the port side of the intake casing connects with the pressure pump inlet. The oil return from the scavenge pump is via an external pipe around the port side of the intake casing, to the connection on the tank, from which an internal stack pipe connects with the air space at the top, so that return oil is sprayed on the upper wall of the tank and flows across the baffle, so becoming de-aerated before it is returned to circulation through the connector tubes.

The spring loaded drain valve connects with the lowest point in the tank and is located beneath a blanking cap.

If it is required to drain the tank contents, remove the blanking cap and obtain a suitable hose which is equipped with a pilot tube in its bore, so that when the hose is pushed on the valve will become unseated, the drainage oil can then be collected in a suitable container.

Provision is made for the fitting of an oil thermometer bulb, if required. A large inspection plug located at the side of the tank can be removed if it is necessary to carry out an internal inspection of the tank, the plug being equipped with sealing rings around its circumference.

Tank Capacity

Total = 16 pints.

Air Space = 2 pints.

Full marking on dip stick = 14 pints.

Empty marking on dipstick = 9 pints.

Usable oil (14 - 9) = 5 pints.

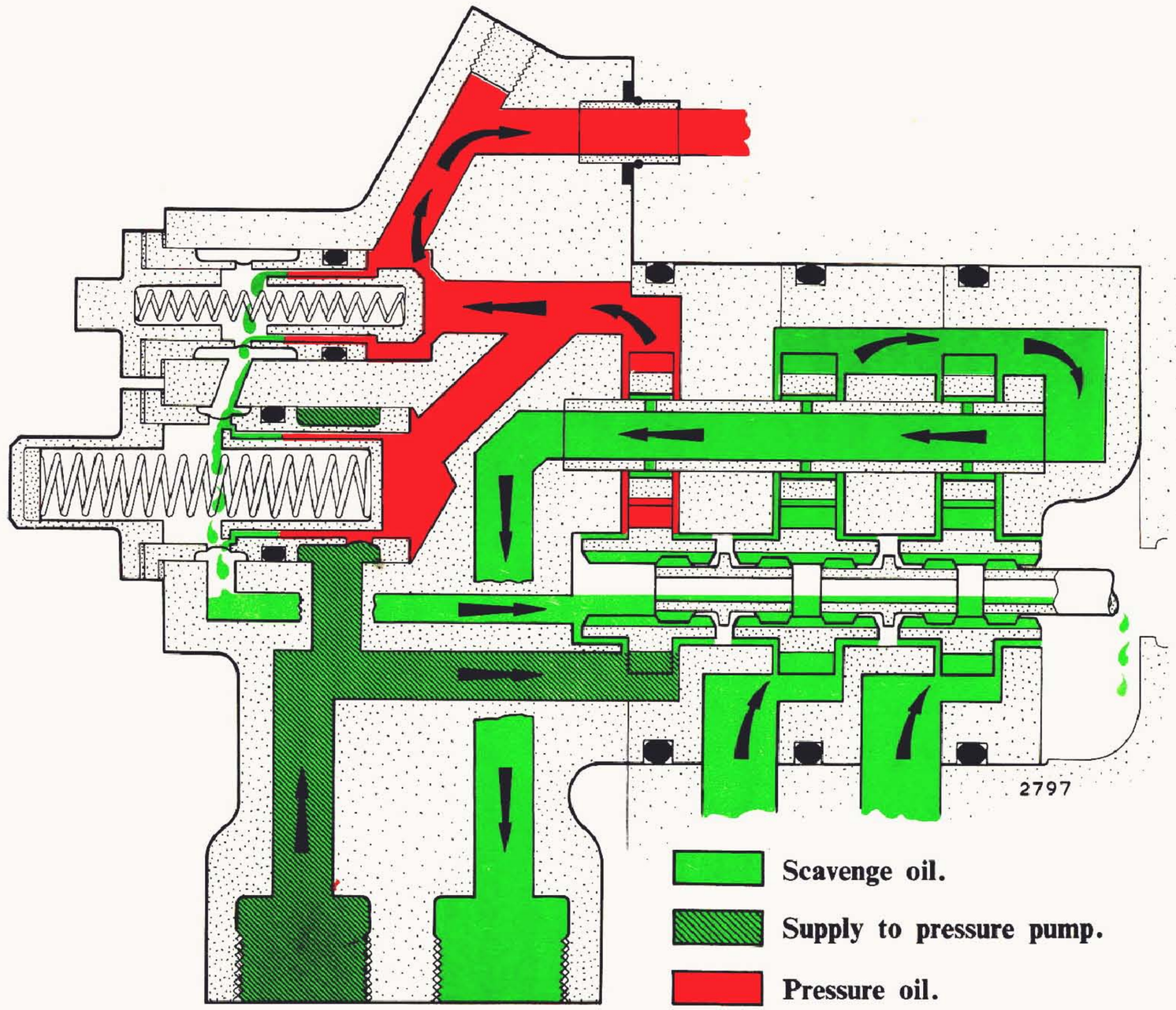

Diagram of oil pump operation

OIL PUMPS

This pump unit is located on the front face slightly to the starboard side gear casing, and consists of two scavenge, and one pressure pump.

It is made up from four casings, the scavenge pump (rear) casing, the scavenge pump (front) casing, the pressure pump casing, and the pump cover, these casings which house the gears being bolted together to form the pump unit. The pump casings which are sealed on their outside diameter with rubber rings are fitted into a recess formed in the intake casing, whilst the pump cover is secured to the face of the casing.

Bearings for the driving gears are provided by bushes in the casings, and the separate gears are connected by hollow splined shafts, the driven gears are mounted on a hollow spindle which passes through the casings.

Located in the pump cover are two spring loaded valves, the check valve, which is interposed between the pressure pump outlet and the feed to the engine, is closed when the engine is stationary to prevent seepage of oil into the engine. The piston type relief valve, operating in a ported sleeve, controls the pump delivery pressure.

PRESSURE PUMP

OPERATION

Oil from the tank is delivered to the connection on the pump cover and so to the inlet side, passing around the gears, it is delivered under pressure through a passageway into the intake casing, and so to the engine supply, the oil which passes the relief valve is directed back to the pump inlet. To prevent a hydraulic lock beneath the valve it is connected to drain through the bores of the driving gears.

No external.....

No external provision is made for adjusting the relief valve setting.

Scavenge Pumps

Scavenge oil from the intake casing is taken through two slots one in each scavenge pump casing to the pump inlets and passes around the gears to the outlet, then through ports which connect to the bore of the driven gear spindle, and through the bore of the spindle to the connection on the pump cover, holes in the spindle provide a passage for oil to lubricate the bores of the driven gears. Twin pumps are fitted to ensure efficient scavenging at all attitudes of the engine.

KEY

1. To turbine rear bearing.
2. Inlet from pressure filter.
3. To metering pump driving wheel.
4. To percentage tachometer generator spur gear.
5. To metering pump driven wheel.
6. To drive bevels.
7. To hydraulic pump quill shaft.
8. To generator drive bearings.

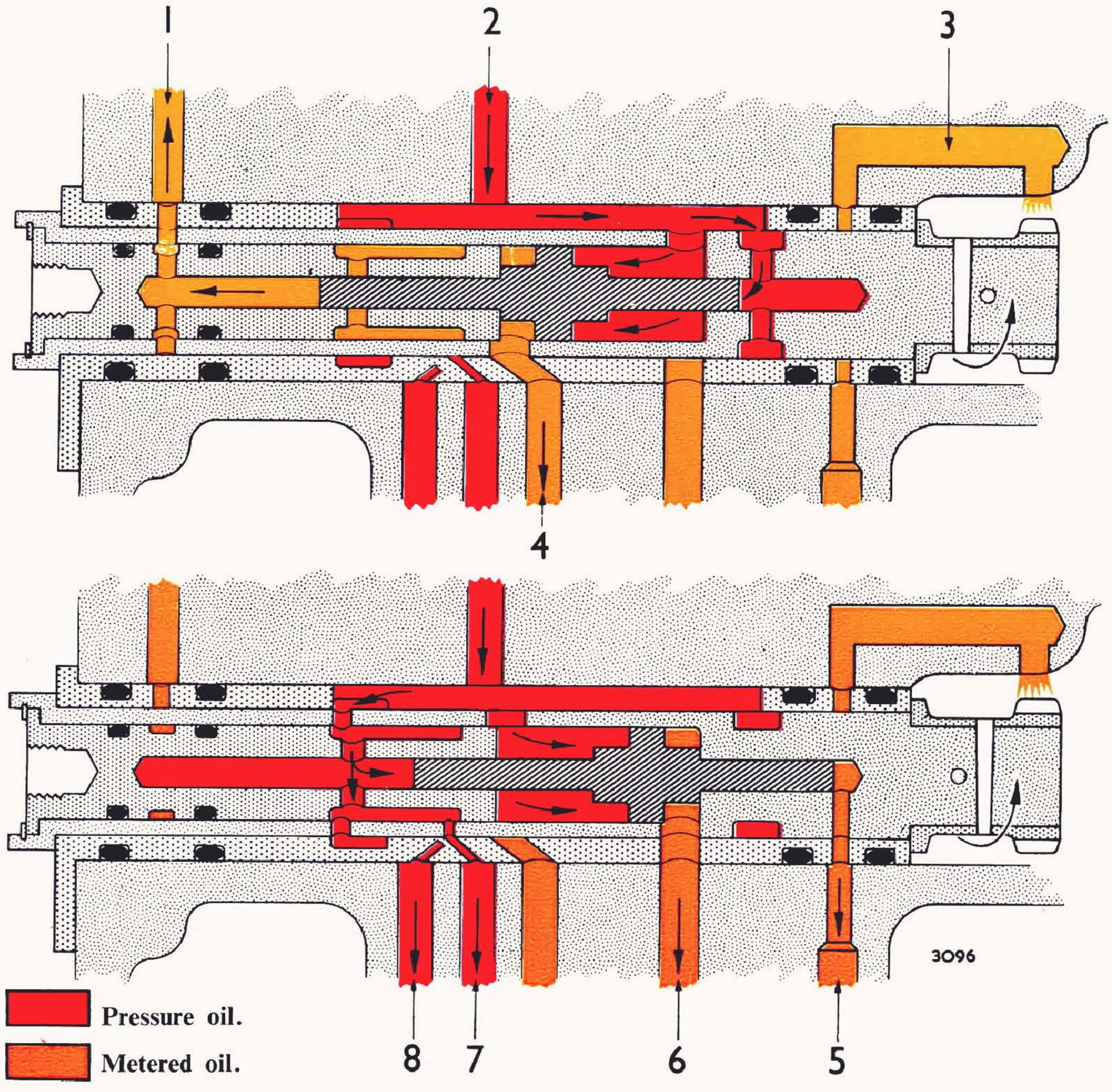

Diagram of oil metering pump operation

OIL METERING PUMP

This unit is located on the port side of the air intake casing gear chamber, beside the pressure filter, and is provided to meter the oil supply to:

1. The turbine bearing, via an external pipe.
2. The gear casing upper drive bevels, via a drilled passageway and jet.
3. The spur on the engine speed indicator drive shaft via a drilled passageway.
4. The upper and lower worm gears of the metering pump drive train, via a drilled passageway, to the upper, and branching off via a restrictor to the lower.
5. The duct to the hydraulic pump quill shaft.
6. The generator drive bearings.

Description

A plunger, located in a support sleeve which is equipped with annular grooves and 'O' seals on its outside diameter, is contained in the bore, of rotating driven sleeve which is equipped with a number of ports, the driven sleeve is housed in the stationary pump sleeve, which is provided with the two inlet slots and various outlet ports.

Ports leading from the chambers formed between the plunger stems and the pump sleeve, and from each side of the plunger in the operating chamber, mate with supply and delivery ducts within the casing, the 'O' seals on the sleeve isolating the ports from each other.

The dual purpose filter cover encloses the metering pump and houses a spring to retain the pressure oil filter element.

Operation

As the driven sleeve rotates, its ports direct the operating oil entering through the longitudinal ports of the pump sleeve to one side of the plunger,

while permitting the discharge of oil from the other side, thus imparting a reciprocating motion to the plunger. As the plunger reaches the end of its stroke, its stem uncovers a port to admit oil into the chamber formed between the stem and its housing. On the return stroke, the stem closes the admission port and forces the oil through a discharge port at the end of the chamber, the other stem operating in reverse sequence. The oil discharged from each side of the plunger stems thus supplies an intermittent controlled feed to the rotating assembly rear bearing as described later in this Section, while the oil from the operating chamber lubricates the gear train.

PRESSURE OIL FILTER

This unit is inserted into the Intake Casing gear chamber on the port side, and comprises a Vokes filter element, which carries a ported sleeve on its inner end cap, and is spring loaded on its outer end cap, the ported sleeve at the inner end is in communication with an oil supply from the engine pump, and the oil flows from the inside to the outside of the filter, and is therefore cleaned before reaching the metering pump. Should the filter become choked the resulting differential pressure on the outer end cap, will create sufficient force to compress the spring, so that the filter will move across and allow the oil to by-pass the element and so maintain the oil supply.

A tapping on the end cover provides an attachment for the fitting of a test pressure gauge.

LOW OIL PRESSURE WARNING SWITCH

This unit which is mounted on the starboard front face of the gear chamber, is linked to the pressure filter chamber by an internal duct, a threaded rod is interposed between the filter chamber and the switch, to damp out fluctuations caused by the intermittent demands of the metering pump.

1. Seal.
2. Filter element.
3. By-pass spring.
4. Oil metering pump and pressure oil filter cover.
5. Test pressure connection.
6. Air intake casing.
7. " O " seal.
8. By-pass port.

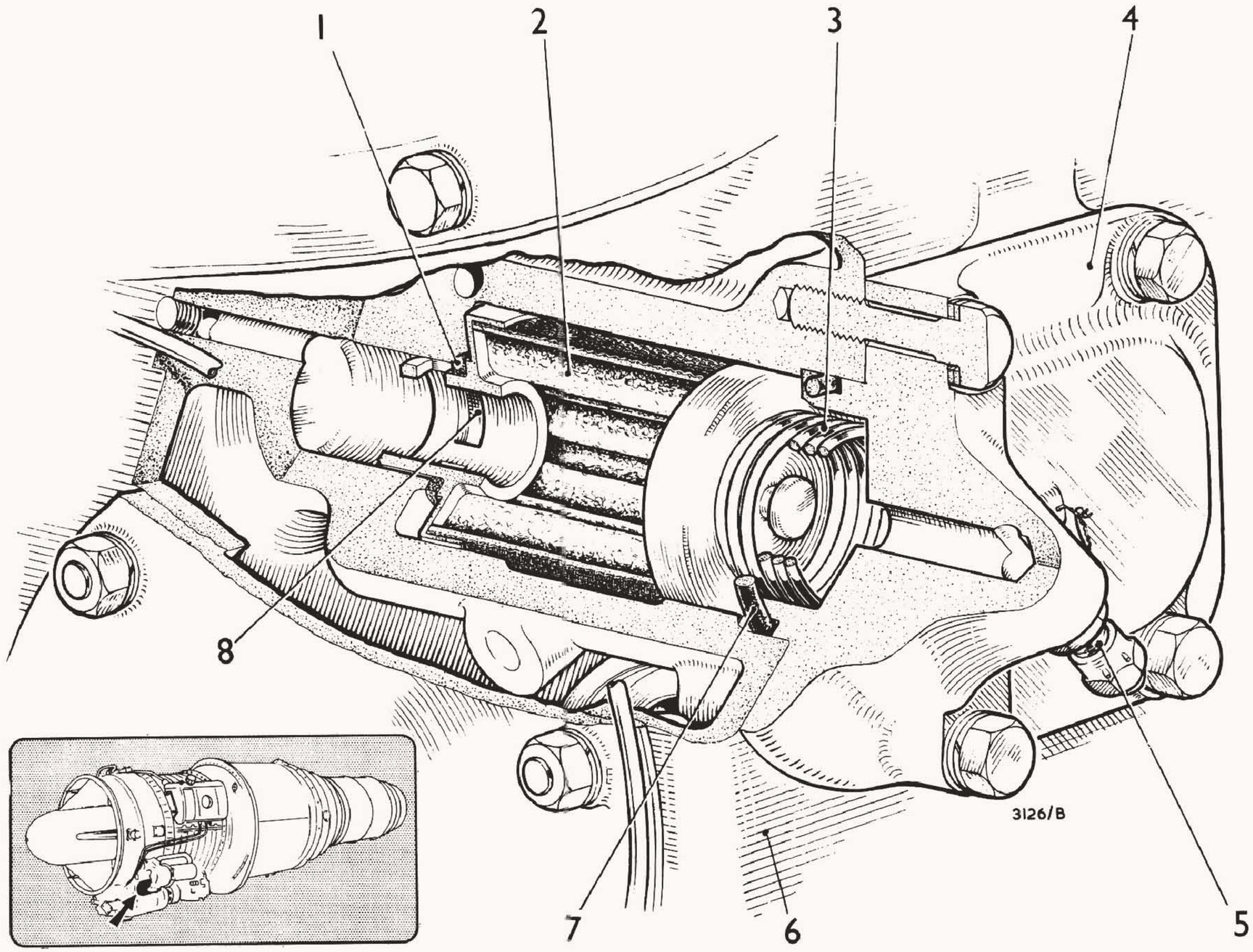

Fig. 19.—Pressure oil filter details

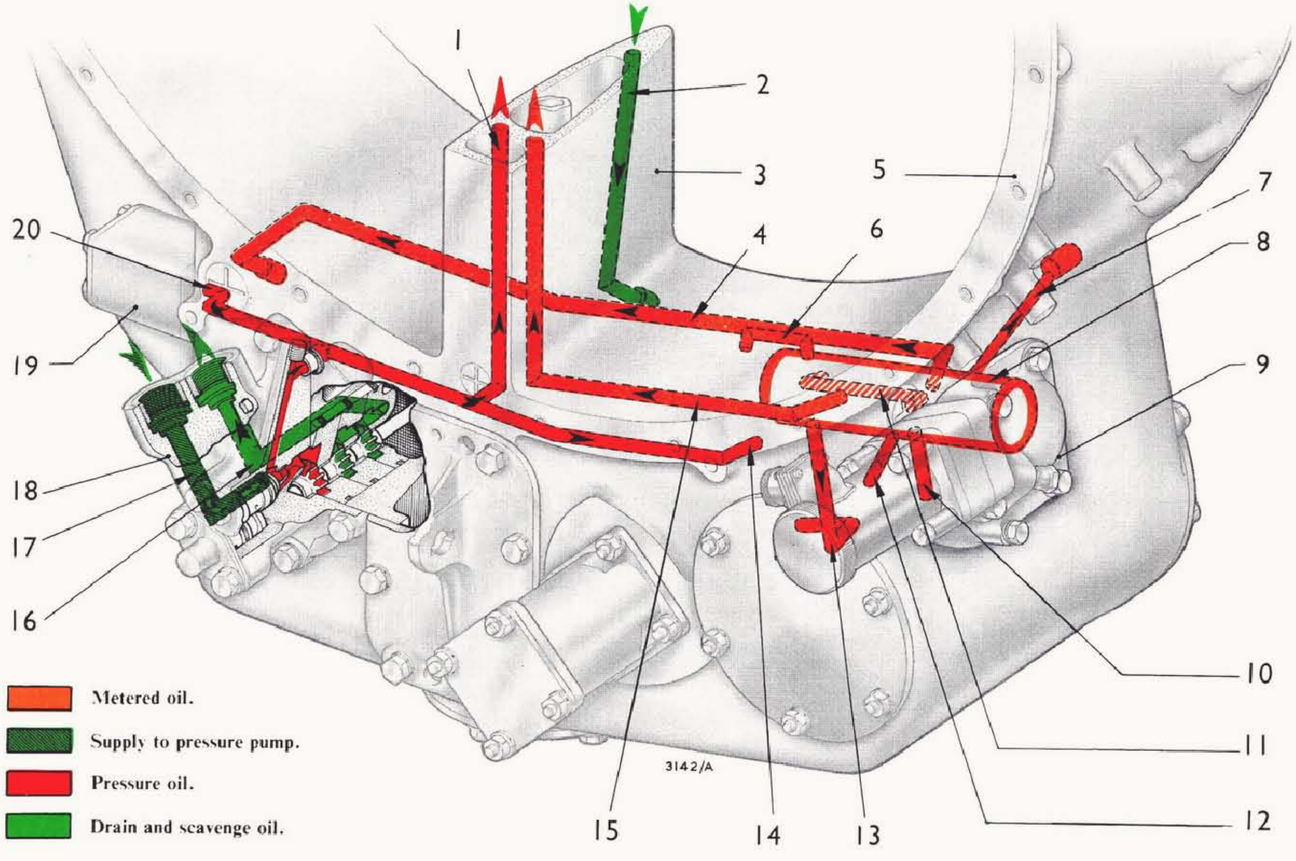

Fig. 62.—Diagram of ducts in base of air intake casing

KEY TO FIG. 62

1. Duct to compressor front bearing.
2. Scavenge oil duct to auxiliary scavenge pump.
3. No. 3 vane.
4. Duct to generator drive shaft bearings.
5. Air intake casing.
6. Duct to metering pump driven worm wheel.
7. Duct for pipe connection to turbine bearing.
8. Metering pump.
9. Pressure oil filter and metering pump cover.
10. Duct to hydraulic pump quill shaft.
11. Duct to percentage tachometer generator spur gear.
12. Duct from pressure oil filter to metering pump.
13. Duct to metering pump drive worm wheel.
14. Main feed duct to pressure oil filter.
15. Duct to driven bevel.
16. Oil return to tank.
17. Oil supply from tank.
18. Oil pump.
19. Oil low pressure warning switch.
20. Duct to oil low pressure warning switch.

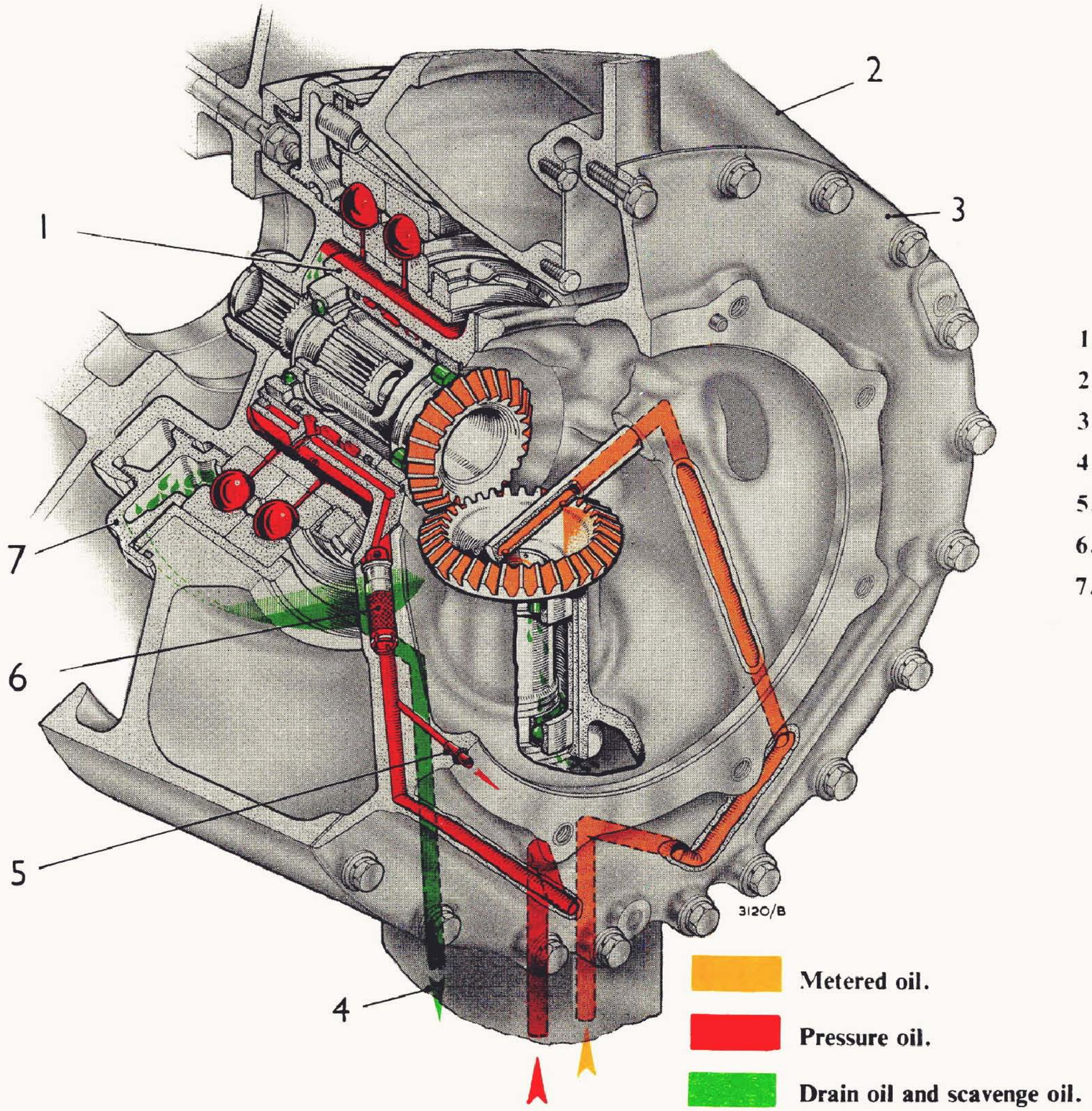

1. Driving bevel housing.
2. Air intake casing.
3. Drive mounting cone.
4. No. 3 vane.
5. Oil feed to starter.
6. Calibrated jet and filter.
7. Bearing cover.

Fig. 63.—Diagram of ducts in air intake casing (inner casing)

LUBRICATION SYSTEM

Oil Pressure Supply

In this system certain components receive a supply of oil direct from the pressure pump, whilst others are lubricated with a metered (intermittent, supply which is taken via the pressure filter and metering pump.

Unmetered Supply

Oil from the tank is delivered to the pressure pump inlet, and passes around the gears to the outlet side, from here it is delivered under pressure into the main supply duct in the air intake casing, through the bore of a hollow sealed dowel, from this point it is taken through a duct to the pressure filter, which is located on the starboard side of the casing.

Branching off from the duct to the filter, a supply is taken through a passageway in the casing which connects with a vertical duct in No.3 vane, through which it flows upwards, and then passes forward via a sealed ferrule into a duct in the drive mounting cone, where it passes through a thread type filter, into an annular space formed in the accessory drive bevel pinion housing.

Two drillings in the housing form jets through which the oil is discharged into the bore of the rotor centre (front), the supply is taken from here, through holes, in split inner races of the rotor bearing, to provide lubrication.

Metered Supply

A duct from the pressure pump leads to the pressure filter, and having passed through the filter the oil is delivered to the metering pump.

One outlet from the metering pump leads to a vertical passageway inside No.3 vane, through which the oil is conveyed to a jet in the drive mounting cone. .....

cone. From this jet the oil is sprayed on to the accessory drive bevel and driving gear, splash from this supply also lubricates the roller and ball bearings of the accessory drive bevel pinion.

A metered supply from the pump is also taken from a connection on the port rear side of the casing, and then through an external pipe which passes around the casing to the starboard side to connect up to the compressor casing at the 5th stage, and from this point the oil is carried rearward by a pipe which passes through the bore of an air cooling pipe, this pipe is continued through No. 4 vane in the exhaust cone, and finally connects to a centrally located jet on the exhaust cone inner casing, the flow through this jet is directed on to an air deflector plate and is centrifuged on to the rotor rear bearing.

The oil feed pipe connecting from the rear of the intake casing to the compressor casing 5th stage is located within the bore of another small pipe, and the annulus formed between the two is supplied with air at the 5th stage temperature, to prevent chilling the oil; a non-return valve located at the tapping on the rear of the intake casing retains the oil in the pipe when the engine is stationary.

A port at the inner end of the metering pump connects with a duct which has two outlets, these direct oil on to the metering pump upper and lower worms and pinions, a restrictor being incorporated to ensure that the supply to the lower worm is in the form of a jet.

A further port at the outer end of the metering pump, conveys oil to the engine speed indicator generator drive gear, the outlet being in line with the teeth, the splash from this supply

provides lubrication...

provides lubrication for the accessory drive gears and bearings, two other ducts direct an intermittent feed to the hydraulic pump quill shaft and the generator drive bearings.

KEY

1. Auxiliary scavenge filter location.
2. Auxiliary oil scavenge pump.
3. Oil drain duct from rotor front bearing.
4. Air intake casing.
5. Transfer tube to auxiliary scavenge pump.
6. Gear casing cover.

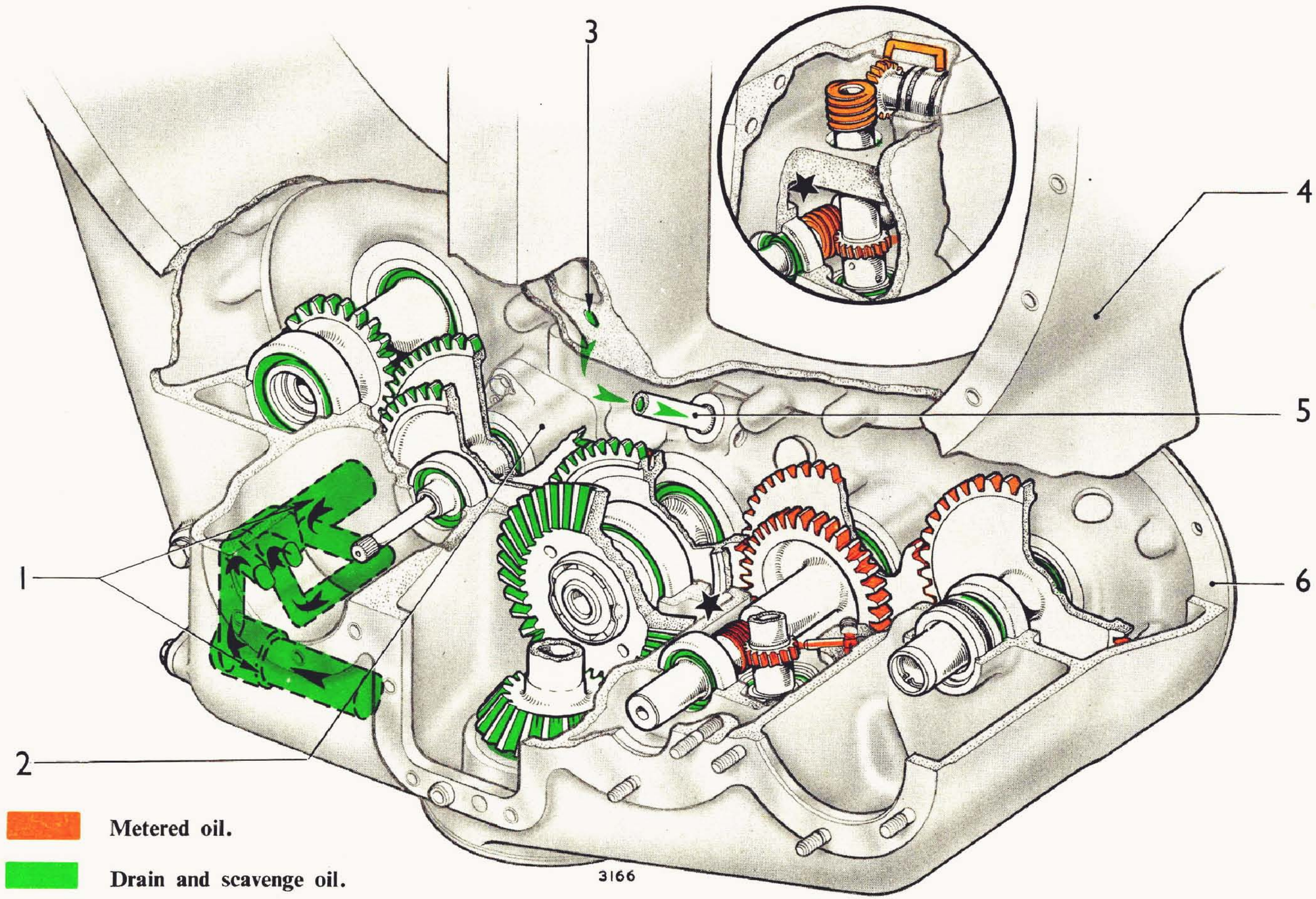

Metered oil.

Drain and scavenge oil.

Oil drain ducts in base of air intake casing

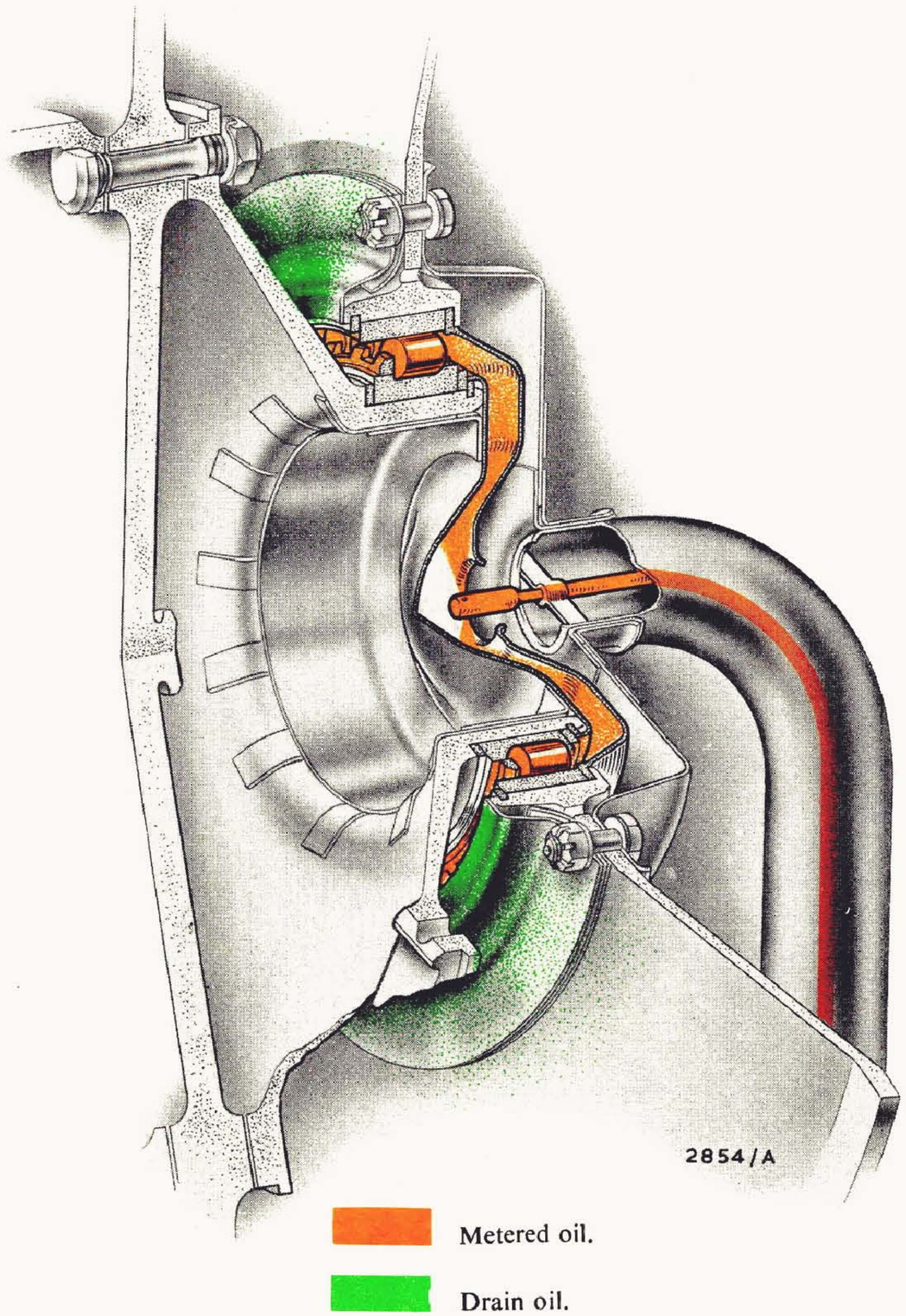

Oil feed to turbine bearing

DRAIN AND SCAVENGE SYSTEM

In level flight oil draining from the front row of the rotor front bearing passes downward into the air intake casing via a cored passage in No.3 vane. Oil draining rearwards is collected in the bearing cover. Transferred through a hollow dowel to the intake casing and then flows downwards through a duct at the rear of No.3 vane. At the base of the vane, a transfer tube conveys the oil to a port in the accessory drive cover whence it flows through a duct to the inlet of the auxiliary scavenge pump. From this pump the oil is discharged into the rear gear chamber to be returned to the tank via the rear filter and main scavenge pump.

In a steep climb all the oil from the front centre bearing drains into the bearing cover and is collected by the auxiliary scavenge pump, whereas during the momentary period of a vertical dive the majority of the oil drains forward from the front bearing.

The oil thus fed into the casing rear chamber augments the metered lubricating supply to the accessory drive gears and bearings.

As previously mentioned the metered oil supplied to the accessory drive top bevels drains into the horizontal and vertical drive bevel bearings. Oil drainage from these bearings gravitates through the cored passage in No.3 vane to the front chamber in the base of the intake casing, lubricating the upper bearing of the vertical drive bottom bevel en route.

The base of the air intake casing forms the engine sump and is divided into two main compartments by the diaphragm which houses certain of the accessory drive shaft front bearings. From these compartments the oil is taken via filters (one for each compartment) which connect with separate passageways leading to the inlets of the main scavenge pumps. From the common

outlet of the scavenge pumps the oil is taken through a pipe around the port side of the intake duct to the oil tank. After lubricating the rear bearing, the oil escapes across the turbine rear face and is burned in the exhaust system.

Oil Low Pressure Warning Switch

Secured to the front face (starboard side) of the gear chamber, this unit comprises a pressure-operated switch in which the contacts are set to close when the engine oil falls to 30 p.s.i. (plus/minus 2 p.s.i.) thereby completing a circuit which energises the low oil pressure warning indicator in the aircraft cock pit.

The light alloy body houses a bellows anchored to a bottom bellows plate secured to the body by countersunk set screws. The bellows interior is open to engine pressure oil while the bellows top plate is located in a central guide in the body and houses an insulation button.

Opposing the bellows a spring loaded contact plate locates on the insulation button, the spring being mounted on the spring locating plate at its inner end, and by a spring register balls and ball guide at its outer end cap. The end cap also provides a means of adjusting the spring loading.

Two contact shoes within the centre of the body protrude from an insulated key piece, these shoes are integral with two pins in the terminal housing, the pins being off-centre to ensure correct connection of the breeze socket.

Principle of Operation

Normal engine oil pressure expands the bellows so that the insulation button thrusts the contact plate clear of the shoes against the spring loading. If however the pressure falls below the figure quoted the spring loading causes the contact plate to bed on the shoes and complete the indicator circuit.

1. Main oil pump driving quill shaft.
2. No. 6 bearing.
3. Air intake casing.
4. Oil pump and auxiliary oil pump drive shaft.
5. Pump body.
6. Generator drive adapter.
7. Accessories drive cover.
8. Pump wheels.
9. No. 7 bearing.
10. Fuel pump drive shaft.

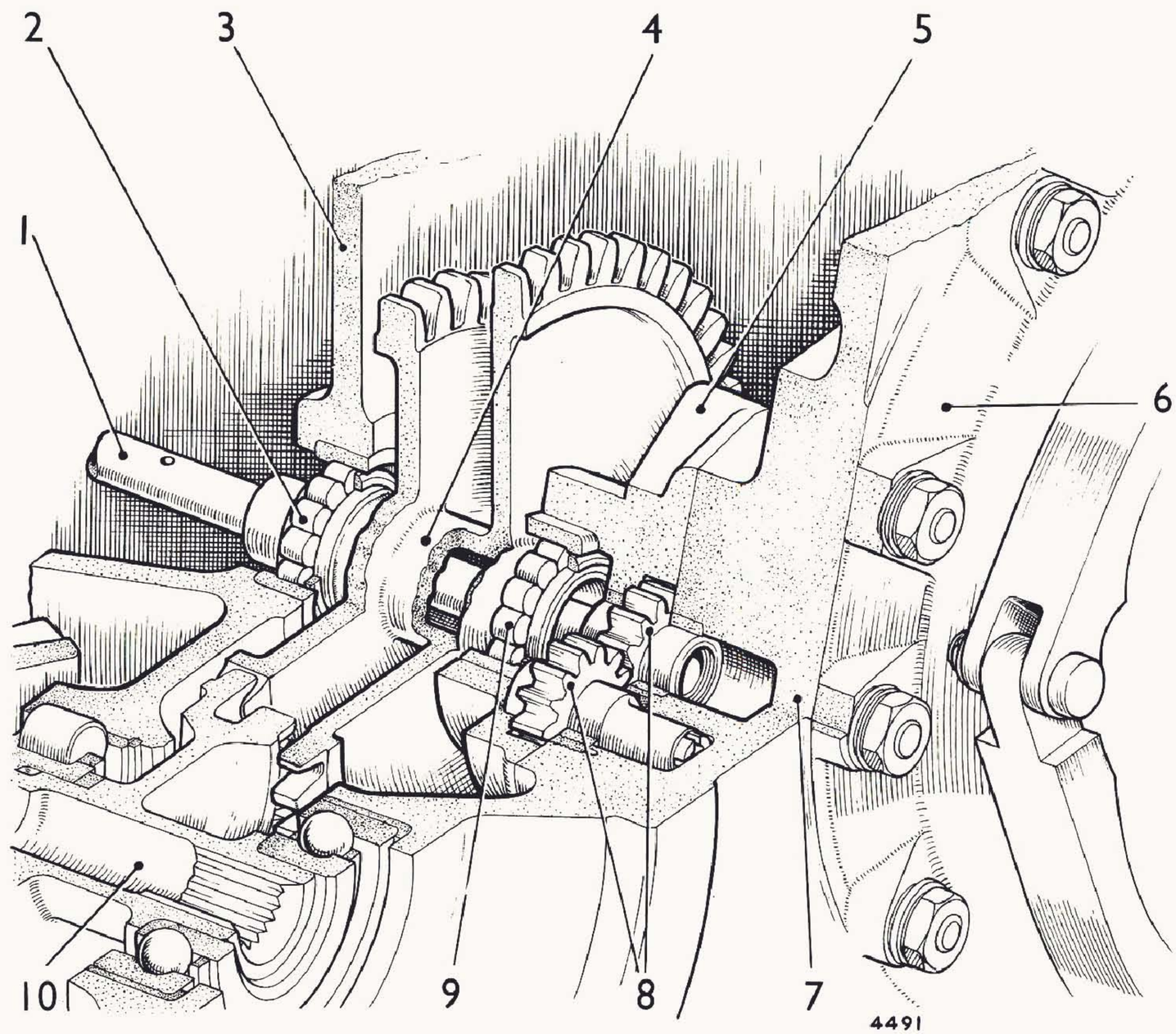

Fig. 16.—Auxiliary scavenge oil pump

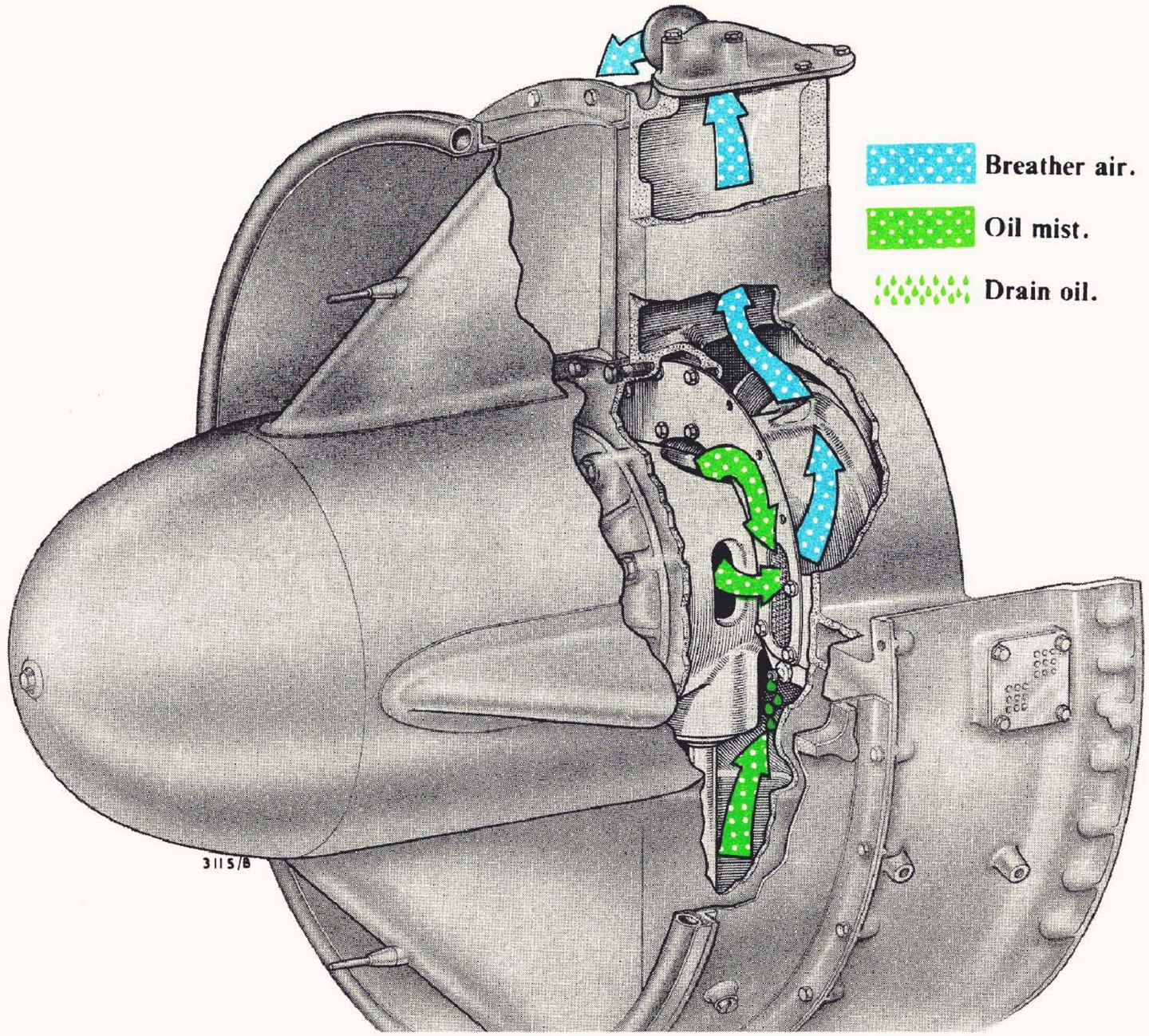

Fig. 58.—Diagram of engine breather system

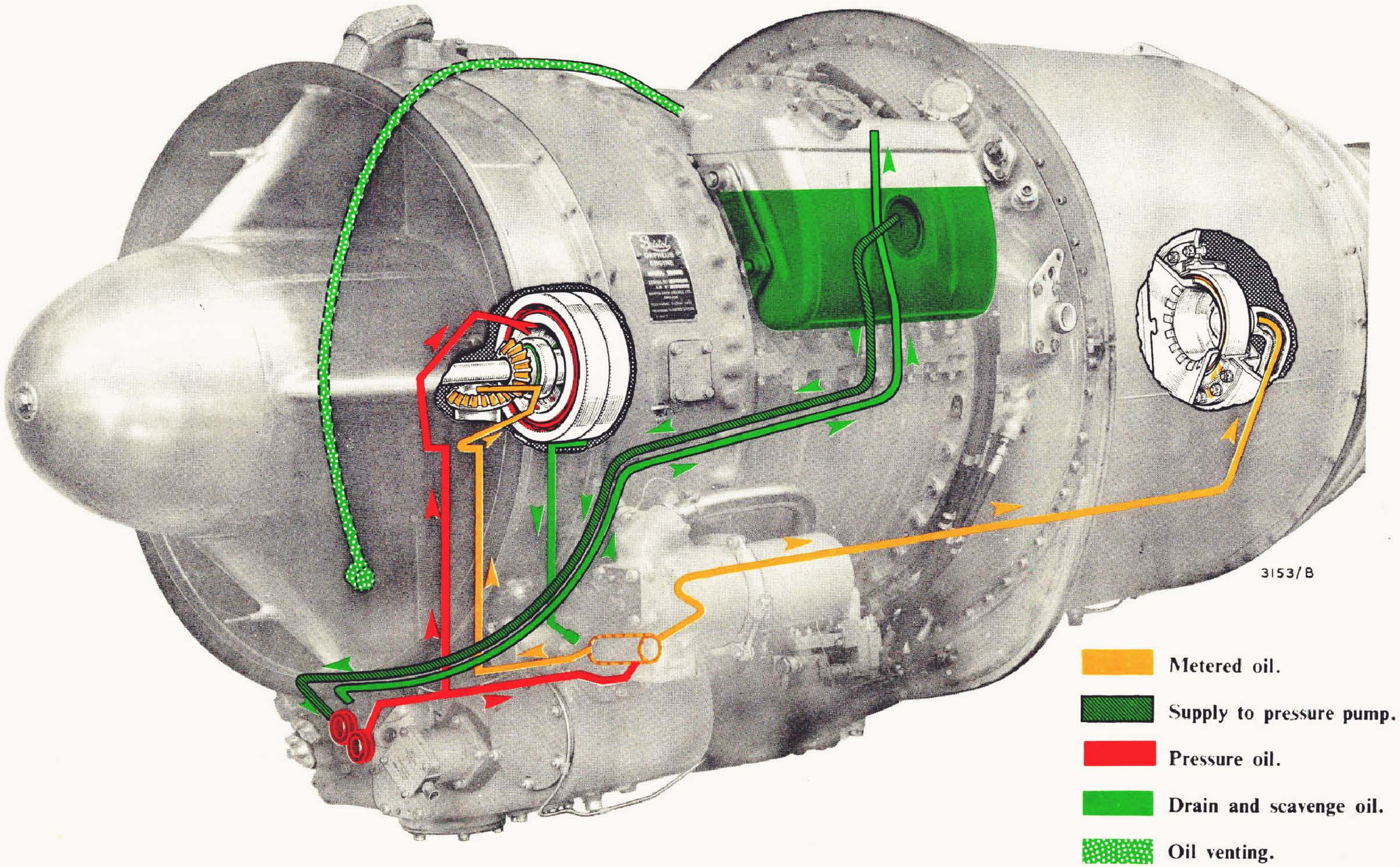

Fig. 60.—Diagram of engine lubrication system

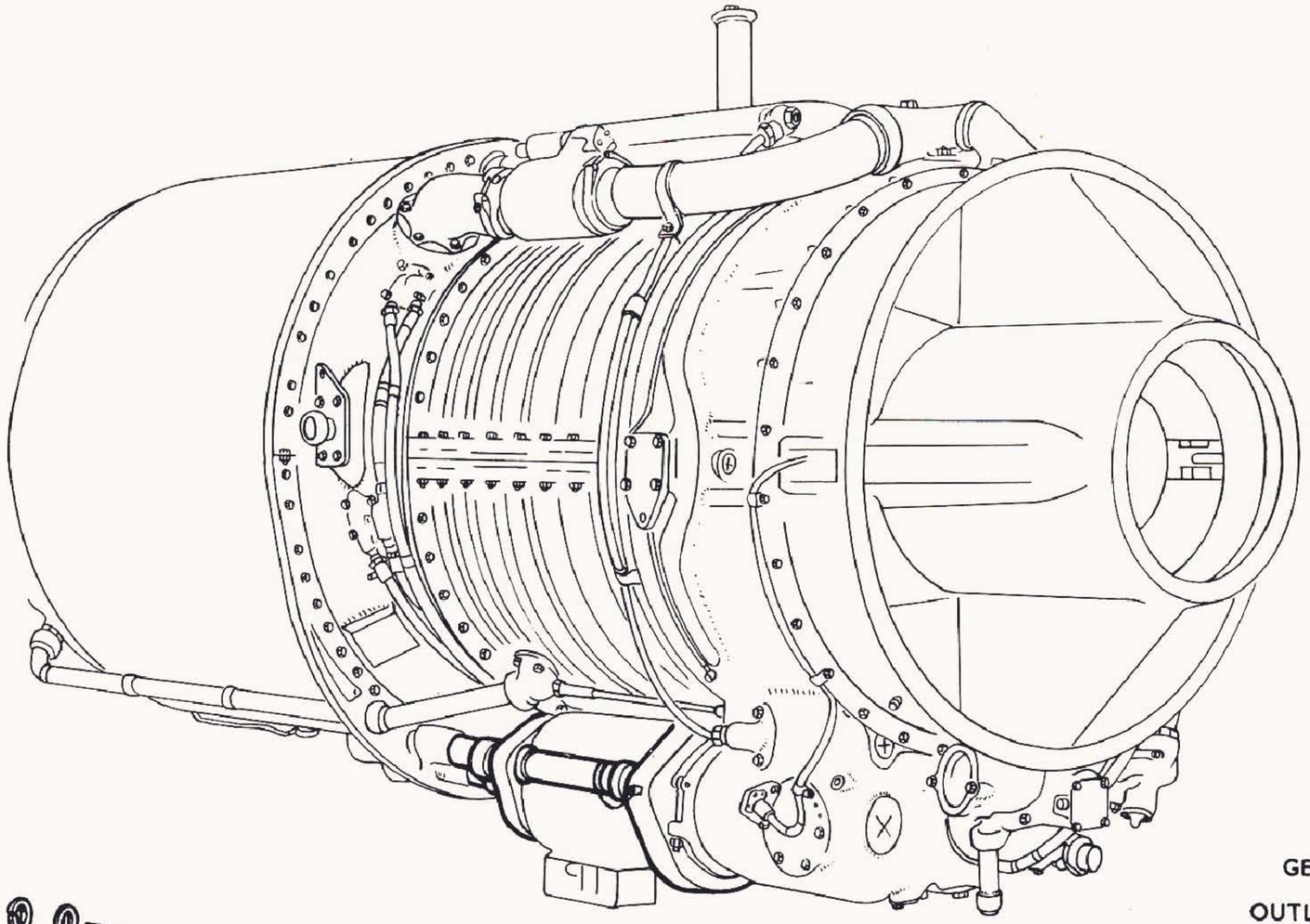

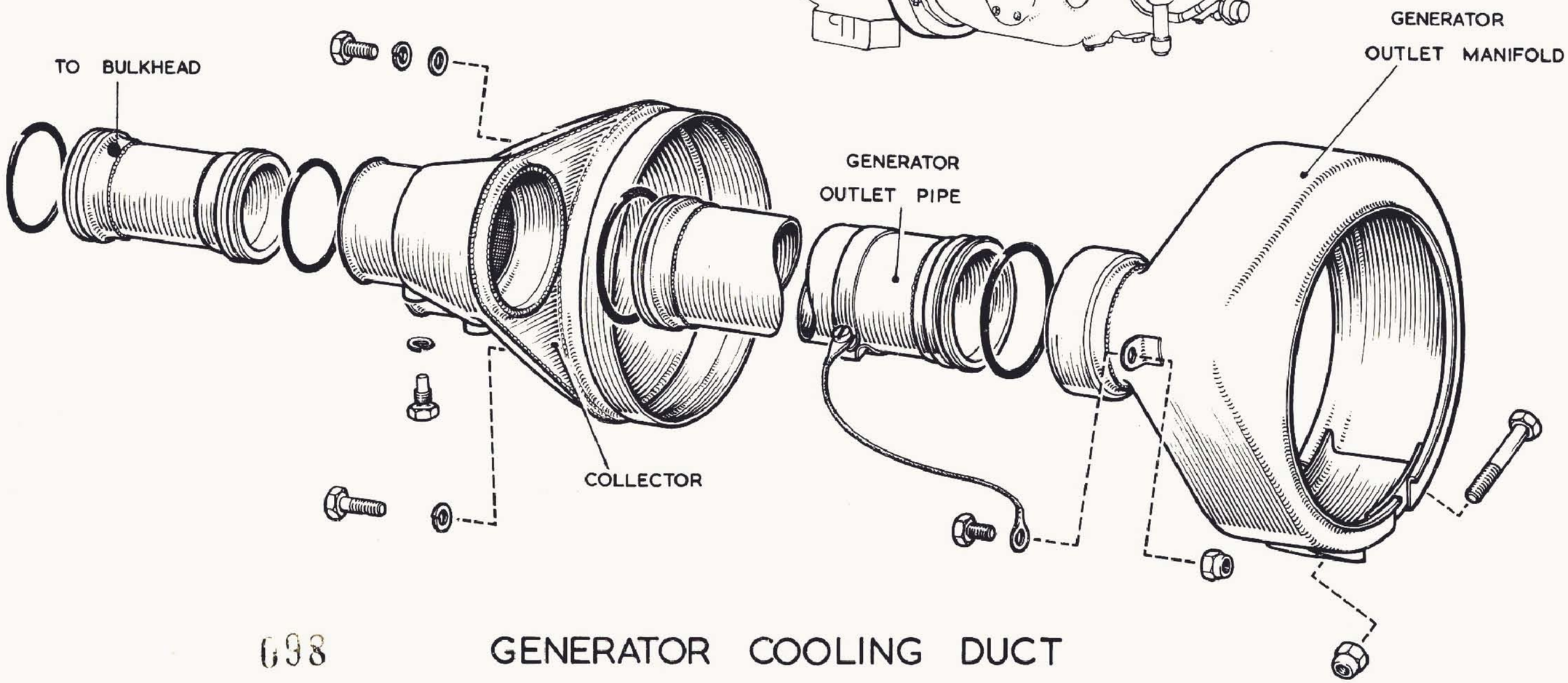

698 GENERATOR COOLING DUCT

TP 5332

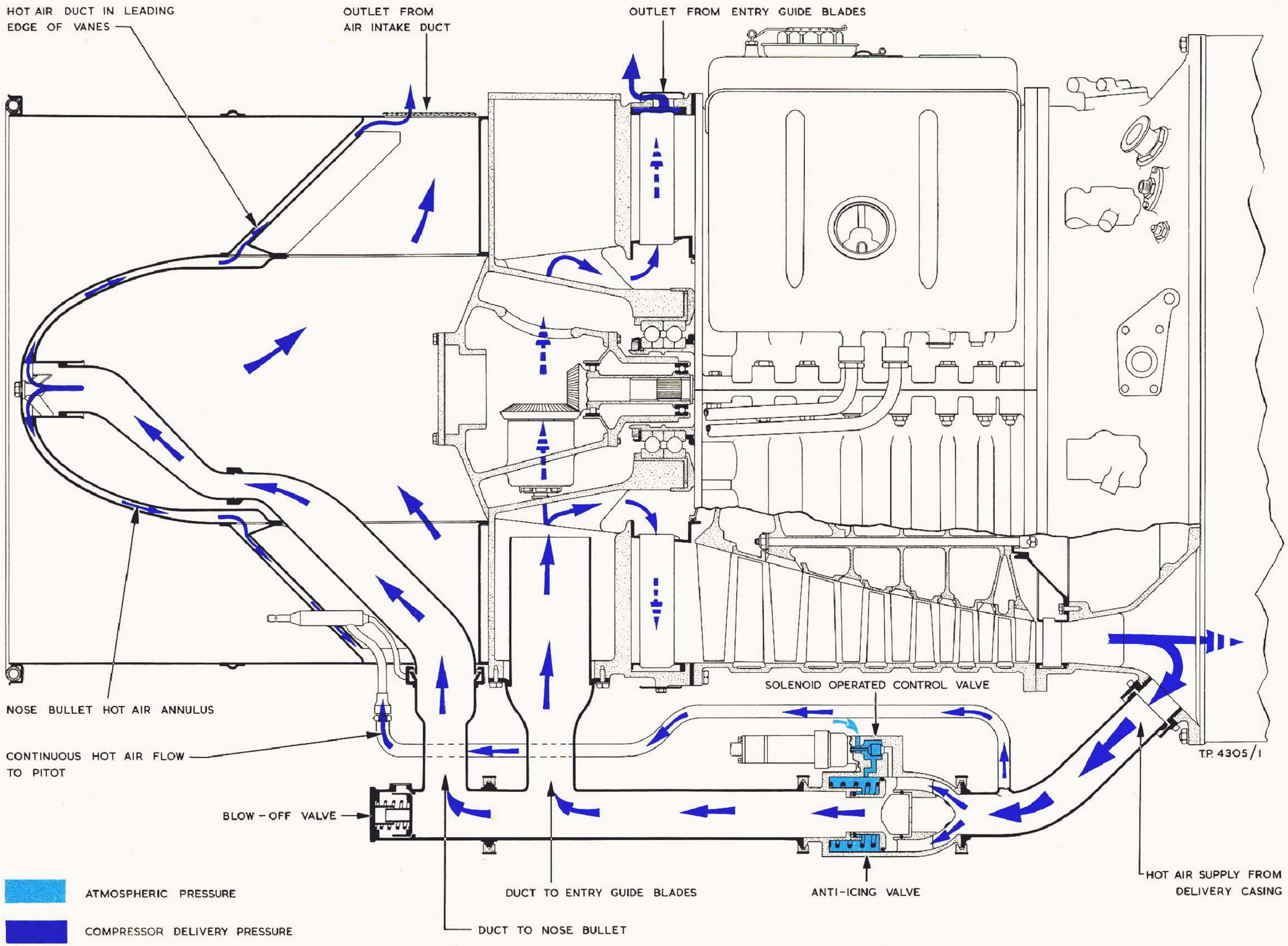

ANTI-ICING SYSTEM

1. COMPRESSOR DELIVERY AIR.

2. 4TH. STAGE AIR.

3. BREATHER AIR.

4. RAM AIR.

5. 5TH. STAGE AIR.

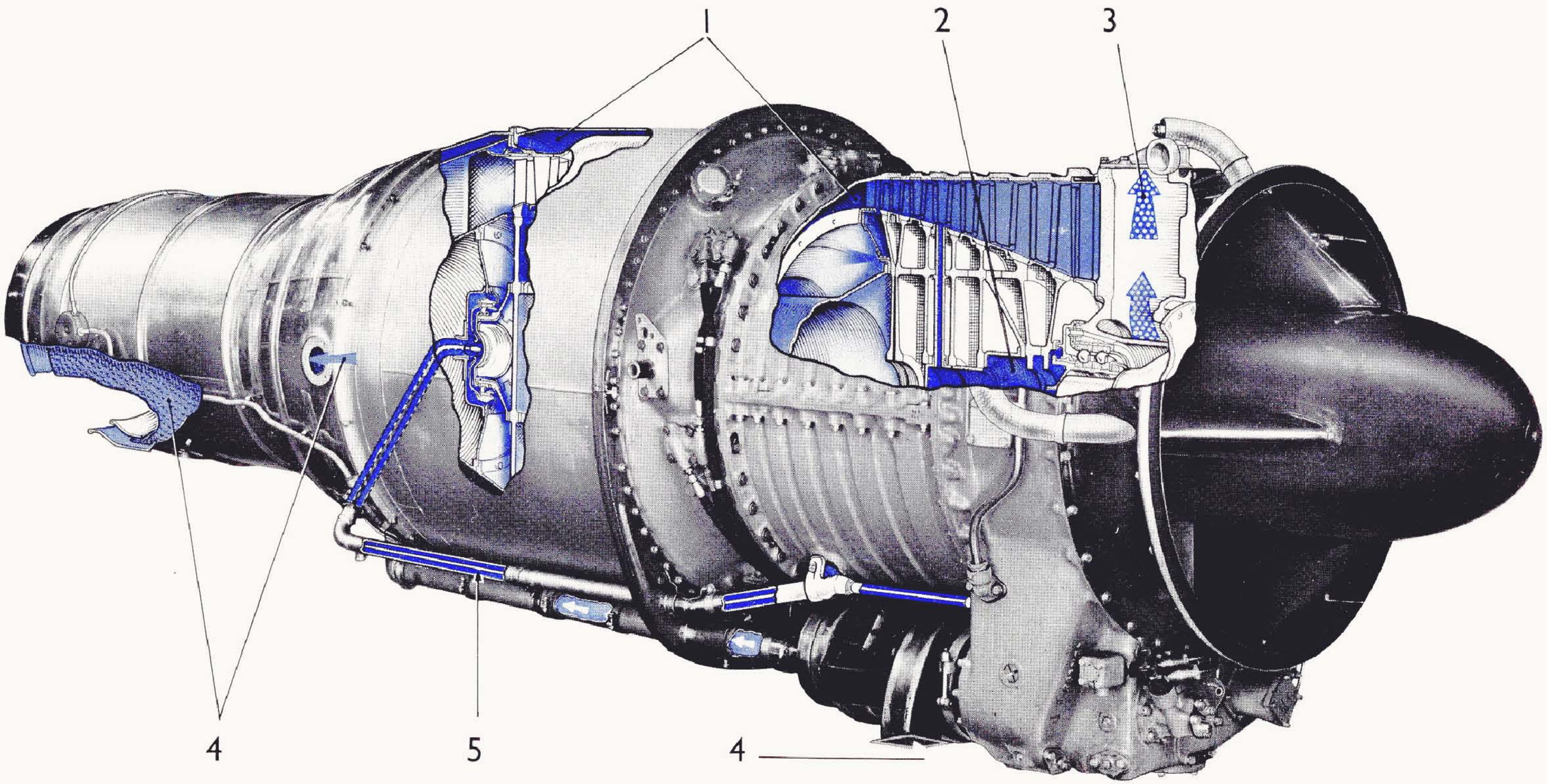

DIAGRAM OF AIR SYSTEM

T.P. 4690

AIR SYSTEM

A small percentage of the air passing through the engine system is tapped off at various stages throughout the engine for the following purposes:-

a. Turbine and bearing cooling

b. Pressurisation of seals

c. Cabin pressurisation

d. Fuel tank pressurisation

e. Jet pipe and generator cooling

Air at Compressor Delivery Pressure

This is taken via slots between the compressor final stage, and the guide vane ring, to flow inward and through slots in the front face of the high pressure seal to the bore of the turbine coupling shaft, through which it flows rearward to escape through the "Hirth" coupling, and up the front face of the turbine wheel, so providing a cooling flow across it, the flow is continued through slots in the wheel near the blade roots to escape into the jet stream, this flow is supplemented by leakage across the high pressure seal which flows rearwards in the annulus between the coupling shaft and the combustion chamber inner casing.

From two connections near the top at each side of the delivery casing an air supply is taken for aircraft pressurisation, and from a connection on the top port side of the delivery casing, a supply is taken through an external pipe and a reducing valve to pressurise the fuel tanks.

A proportion of the air which passes over the combustion chambers is taken through passageways at the rear to provide a cooling flow around the turbine shroud ring.

Air at 5th Stage Pressure

From a connection on the bottom starboard side, air from this stage is taken via an external pipe, which carries it rearward and through No. 4 vane in the exhaust cone to the centre of the bearing cover, from here it flows .....

here it flows inside the bearing and into the bore of the rotor centre from which it escapes through the "Hirth" coupling, this supply, together with that which flows through and around the outside of the bearing, flows up the rear face of the wheel to escape via an annulus at the forward end of the inner cone into the exhaust stream.

Air at 4th Stage Pressure

From this stage air flows radially inward through three pipes to the bore of the compressor rotor, through which it flows forward to pressurise the intake and bearing seals, the air which leaks across the intake seal flows to the compressor inlet, whilst the air supplied to the bearing seal is connected to vent through Nos. 2 and 4 vanes in the intake casing, which are screened at their outer ends by drilled plates bolted to the side of the casing.

Gear Chamber Vent

The vent passage from the gear chamber is taken via a gauze pack, which acts in the capacity of an oil separator; to connect with a passageway in No. 1 vane of the intake casing, which connects with atmosphere at its upper end.

Jet pipe cooling

The expansion at the jet pipe induces a flow through ducts at the forward end of the shroud, to provide a cooling flow between the jet pipe and shroud when ground running; in flight air is taken from ports on the fuselage into the annulus between the jet pipe and shroud.

Generator cooling

A forward facing scoop on the lower starboard sideof the aircraft fuselage, collects a supply of ram air which is taken to cool the generator, having passed across the generator the air is exhausted into the jet shroud annulus, via a pipe (which incorporates a flame trap) on the lower starboard side of the engine.

BEARINGS AND SEALS

Rotor Assembly Front Bearing

Provides a bearing for the forward end of the compressor rotor, it comprises a pair of ball thrust bearings.

Rotor Assembly Rear Bearing

Provides a bearing at the rear of the turbine wheel, and comprises a single row roller bearing.

The whole rotor assembly (Compressor and Turbine) is supported by these two bearings, end thrusts are taken by the forward bearing, and the rear roller bearing allows for expansion.

SEALS

Front Bearing Seal

This comprises two labyrinth seals, one behind the other with an annular space between them; the seal is pressurised with air from the compressor 4th stage, and is provided to retain the oil in the rotor assembly front bearing.

It is located at the rear of the bearing.

Compressor Front Seal

This is a labyrinth type seal which surrounds the front bearing seal, it is pressurised with air at 4th stage pressure, and is provided to prevent leakage of oil into the compressor. It is important that no oil enters the compressor in view of the fact that the cabin pressurisation supply is from the engine compressor.

Compressor Rear Seal

This is a labyrinth type seal at the rear end of the compressor rotor to prevent excessive leakage. Some small amount of leakage takes place across the seal and is utilised for cooling purposes.

Turbine Seal

This seal comprises a corrugated spring and piston type.....

piston type sealing ring, which is located around the rear end of the combustion chamber inner casing, and in the bore of the stator ring, to prevent hot leakage from the turbine.

HIGH ENERGY IGNITION SYSTEM (AIRCRAFT SUPPLY)

Technical Data.

Type	.....	C28
Input Voltage	.....	16 to 29
Input Current at 20 Volts	.....	1.5 amps.
Output Voltage	.....	2 K.V.
Stored energy per discharge (joules)		6
Maximum altitude	.....	60,000 ft.
Ambient Temp. Range	.....	°C - 50 to + 100
Minimum frequency of discharges per minute on 20V input	.....	120

PRINCIPLE OF OPERATION.

An induction coil, operated by a trembler mechanism from the 24V.D.C. supply, repeatedly charges a reservoir capacitor through a high voltage cold cathode rectifier until the capacitor voltage increases to the value at which the sealed discharge gap breaks down. The capacitor then discharges across the gap and the engine surface discharge plug, which are connected in series.

Protective resistors are connected across the output circuit to limit the value to which the reservoir capacitor voltage rises in the event of an open circuit occurring in the external high tension circuit.

Discharge resistors are fitted to the reservoir capacitor to ensure dissipation of stored energy, should the capacitor be left in a charged condition when the unit is not in use.

WARNING.

One minute must elapse after operation, before work on any part of the system can be carried out, as a lethal discharge can be obtained from the reservoir capacitor.

(Igniter Plugs Type RH 375/1)

2 off situated in Nos. 4 and 7 cans.

SURFACE DISCHARGE IGNITERS.

The surface discharge igniter is designed to produce a .....

produce a spark of sufficient energy to vapourize the fuel droplets and then ignite the mixture.

Construction

Surface discharge igniters depend for their operation on a semi-conductive path between the central electrode and earth.

The centre electrode and a terminal pad are embedded in a moulded insulator, an earth return path for the current being formed by the metal body which encases the insulator. The semi-conductive path is formed on the nose of the insulator and bridges the annular gap between the central electrode and the metal body, the material being such that it will not deteriorate under any operating conditions. The terminal pad is surrounded by a tubular screen lined with insulating material, the screen being within the gland nut which, in turn, is screwed into the mounting flanges.

STARTING SYSTEM

General

The engine starting system comprises a gas-driven turbo starter and two separate cartridge breech units. The starter is mounted centrally on the front face of the air intake casing being enclosed within the air intake duct bullet; the breech units are mounted side by side on the upper right-hand side of the intake casing. From each breech a gas delivery pipe passes through No.1 and 2 air intake duct vanes to the starter inlet casting; the starter exhaust duct unit is accommodated in No.4 vane on the left-hand side of the duct. Refrasil head insulation blankets are fitted to both gas delivery pipes, as illustrated.

Construction

Starter

Three main assemblies contained in four casings are secured to each other with studs and tabwashered bolts, the assemblies being:-

1. The turbine and first stage reduction gear.
2. The second stage reduction gear.
3. The output shaft and dog clutch mechanism.

The single-stage impulse turbine rotor is housed within an annular chamber formed between the exhaust casing and the inlet casing. The integral rotor shaft is supported in two ball bearings housed in the rotor carrier, the bearings being separated by the rotor pinion gear which is serrated to the spindle. This assembly is retained on the spindle by a nut locked with a cup washer.

Bolted to the rear face of the carrier is a flanged cover which, together with the front wall of the carrier, houses the carrier mounting ball bearings. One bearing is mounted on an internal spigot in the inlet casting and the other on a sleeve shrunk into the front wall of the gear casing.

Completing the spur type first stage of the reduction gear, the layshaft gear is mounted below the rotor pinion gear, its two bearings being housed concentrically with the carrier bearings. The rear end of the layshaft protrudes beyond the rear bearing into the second stage reduction gear casing and is serrated and threaded to accommodate the second train pinion which is retained by a seating washer and cup washered nut.

The rotor carrier (and hence the rotor) is free to swing about the longitudinal axis of the layshaft gear under torque reaction; the purpose of this feature is described later. Movement of the carrier is, however, limited by a torque control unit housed in the left-hand side of the inlet casing.

The torque control unit comprises a spring-loaded plunger which is free to slide in a threaded spring housing screwed into the casing, the position of the housing (and hence the spring pressure) being retained by a locknut. This adjustment is set and locked by the manufacturer and must not be disturbed. The upper end of the spring is retained within the housing by a spring retaining cup and circlip, while a slot in the base of the plunger accepts the specially profile torque arm which is integral with the rotor carrier. The plunger in the fully deflected condition is when full gas pressure is applied to the rotor during the starting cycle. When the rotor comes to rest, the plunger is extended by the spring loading until it contacts the stop screw in the base of the control unit housing.

Two flanged ports in the right-hand side of the inlet casting each accommodate an inlet pipe adaptor which receives the connection of the gas delivery pipe from the corresponding breech. Each adaptor is of heat-resisting alloy steel and embodies an integral

gas delivery nozzle which projects into the annular exhaust chamber and directs the gas stream on to the turbine rotor blades. The nozzle is of convergent-divergent section to convert the gas stream from high pressure to high velocity at almost atmospheric pressure at the discharge orifice. Further details of this arrangement are given later under "Principle of operation".

The reduction gear second stage is housed within the gear casing bolted between the inlet casting and the driving end casting; the casing incorporates a detachable plug for unit oil priming purposes. The gear train is of the epicyclic type with a stationary planet carrier secured by tabwashered nuts to internal studs in the casing.

Two bearings housed in the carrier rear wall and in a housing bolted to the front face of the carrier respectively, mount the sun gear and its integral pinion, the drive to the gear being initiated by the second train pinion referred to previously. The drive is continued through the sun pinion to three planet gears which are carried on twin ball bearings on the planet carrier pins. The drive output from this gear stage is completed by a bell-shaped annulus gear which embraces the planet gears. The spigot journal of this gear is supported in a single row ball bearing housed in a flanged bearing plate retained between the joint faces of the gear casing and the driving end casting. Both the front and rear face joints of the plate are sealed with rubber rings, the plate being dowel located. A ring nut locked by a cup washer retains the gear in the bearing, while the spigot extends rearwards of the nut location and is embraced by an oil seal contained in a housing bolted to the rear face of the bearing plate.

Splines in the bore of the annulus gear mount

a driving dog by which the drive at the reduced speed is transmitted to the output shaft, the dog being held in engagement with the output shaft dogs by a spring contained in its bore and located by a screwed plug in the front end of the annulus gear bore. This forms part of the oil-operated clutch mechanism, further details of which are given subsequently.

The output shaft and dog clutch mechanism is housed within the drive end casting, the casting embodying the mounting flange by which the unit is secured to the engine.

The output shaft is supported by ball and roller bearings in a housing, the flange of which is secured, (together with a deeply spigoted sleeve), to the recessed rear face of the driving end casting. To provide automatic disengagement of the driving dog from the output shaft when the engine starts, a sliding control sleeve is fitted in the bore of the sleeve referred to previously, an internal flange in the control sleeve locating behind the flange of the driving dog, while the control sleeve head registers with an annular groove in the bore of the outer sleeve. Oil at engine pump pressure is fed through a transfer hole in the starter mounting flange and is ducted to this annular groove. When the engine is started, oil pressure is applied to the underside of the control sleeve head. When this pressure reaches a value exceeding the loading of the control valve spring, the sleeve will move forward and draw the driving dog out of engagement with the output shaft, holding it thus during all engine running.

To lubricate the gears and bearings, the unit is primed with 80 c.c. of engine oil immediately after fitment. This oil level is maintained automatically each time the starter is operated, the supply being taken from the supply duct in the mounting flange, thence to the gear chamber via a spring-loaded oil control valve

housed transversely in the base of the driving end casting. Approximately 4 c.c. of oil is injected to compensate for the amount lost by combustion in the turbine chamber at each start.

Breech

The only difference between the breeches is the breech base, the gas delivery connection of which is "handed" to suit the installation position.

Screwed and locked to the forward end of the cylindrical breech body, the breech base is of hemispherical section and embodies a pair of drilled brackets by which the breech is mounted on the engine. Two ports are provided in the base, one being for gas delivery, the other communicating via an integrally-cast elbow with a pressure relief valve contained in a housing which lies parallel with the breech body. The relief valve is of the poppet type with double compression springs. It is designed to open when gas pressure in the breech exceeds 1,200 p.s.i. thus relieving excess pressure to atmosphere through an exhaust port in the side of the housing. The valve is set by the manufacturer and no attempt must be made to dismantle it in service, otherwise injury may be caused if the springs are released.

Two circumferential ribs on the breech body locate a split clamp which embodies an electrical socket to which the cartridge firing cable connects. A single blade spring contact from the socket extends rearwards under the clamp to convey the firing current to a slip ring housed in the forward end of the breech cap bore. The rear face of the clamp is grooved to accommodate a sealing ring; this makes contact with the breech cap (when fitted) and provides a gas-tight joint. The rear end of the breech body is threaded externally to

accept the breech cap, while its rim is serrated to act as a locking device for the two claws which lock the cap in position.

The main carcase of the breech cap is of steel encased in a spun-over shell, the head of the cap embodying an integral hand wheel by which the cap is screwed on to the body.

Enclosed within the shell, the underside of the head is provided with four radial slots which accommodate two pairs of pivoted claws tensioned by leaf-type springs. The larger pair of claws engage the serrated rim of the breech body and lock the cap positively to the breech body; these claws can be disengaged for cap removal by depressing the spring-loaded plunger housed in the breech cap hand wheel. The smaller pair of claws locate under the rim of the cartridge (when fitted) and enable the spent cartridge case to be withdrawn simultaneously with the breech cap. The cartridge is released by depressing the two diametrally-opposed plungers in the head of the cap.

To complete the electrical circuit from the breech cap slip ring through the cap to the insulated centre contact in the rear face of the cartridge, a spring-loaded firing pin is housed within the hollow stem of the breech cap handwheel. The spring serves the dual purpose of maintaining the pin in the extended position and as a return spring for the locking claw plunger, referred to previously.

Cartridge

This consists of a solid propellant charge contained in a brass case embodying a flanged base, inserted into the centre of which is the primer. To ensure constant gas pressure during the burning period, the charge is hollowed out in the centre and, since the charge becomes plastic during burning, an expendable grid plate is inserted into the mouth of the case to contain the charge within the case.

Spun-riveted into the centre of the cartridge case base, the primer consists of a small container filled with a gunpowder mixture. This container is in electrical contact with the cartridge case and has an insulated centre contact connected to a fuse wire running through the gunpowder mixture to "earth" on the primer body.

The passage of an electric current through the fuse wire heats it sufficiently to ignite the gunpowder and fire an igniter charge of large-grained gunpowder held in a gauze bag interposed between the primer and the main charge; this in turn ignites the cartridge. Under normal temperature condition, this sequence of ignition is an almost instantaneous cycle, but under arctic conditions, some delay or "hand fire" may occur.

PRINCIPLE OF OPERATION

The sequence of events occurring in the starting system during an engine start is divided between the ignition of the cartridge in the breech and the reaction of the turbo-starter to the high pressure gas delivered from the breech.

The cartridge is fired electrically by depressing a switch in the cockpit. This completes the circuit to the cartridge through a time switch and solenoid which holds in the switch for a period of 30 seconds, thereby rendering the second breech "safe" and precluding the possibility of the second cartridge being fired prematurely thus over-speeding the starter.

The firing sequence is as follows:-

1. The fuse wire in the primer is heated and fires the small primer charge.
2. The quick flash from the primer charge fires the larger and longer burning charge in the gauze bag, which
3. Ignites the cordite cartridge.

Combustion of the main charge releases gas at high temperature and pressure which passes through the associated delivery pipe to the turbo-starter nozzle.

In passing through the convergent-divergent nozzle, the gas flow is accelerated to supersonic velocity with a corresponding drop in pressure to almost atmospheric at the discharge orifice. This ensures that the maximum effort is applied to the turbine wheel.

When the motor is at rest, only the tips of the blades are aligned with the nozzles. When the cartridge is fired, the gas spins the rotor, and since the rotor and carrier assembly is free to swing about the carrier bearings, the assembly commences to swing under the torque reaction of the initial rotor impetus thus moving the blades into increasing alignment with the gas nozzle.

As the cartridge burning period progresses, the rapidly increasing gas velocity at the nozzle orifice applied to the greater blade area now exposed to the delivery increases the torque reaction in the rotor carrier until, with full velocity applied, the rotor blades are in full alignment with the nozzle and the motor spins at its maximum speed.

Under the foregoing conditions, the position of the rotor and carrier assembly in response to the torque applied, will be governed by the torque control unit housed in the left-hand side of the inlet casing. As the carrier swings on its bearings, the integral arm will be deflected upwards and commence to depress the plunger against the loading of the spring until with the rotor blades in full alignment with the gas delivery nozzle, the carrier will be held by the torque against a stop on the inlet casing. The setting of the torque control spring governs the starter under no load conditions, and no attempt must be made in service to

alter the adjustment.

With the starter at rest, the driving dog is held in engagement with the output shaft dogs by the spring contained in its bore. Therefore, immediately the rotor commences to spin, the drive will be tra nsmitted by the reduction gear through the driving dog and output shaft to the engine coupling quill shaft to rotate the engine compressor. Speed builds up very rapidly during the normal four seconds burning time of the cartridge, during which period the engine will "light up".

As soon as the engine commences to run, its oil pump delivery pressure will rise. When the cartridge ceases to operate and the oil attains a pressure of approx. 15 p.s.i. the loading of the driving dog spring is overcome and the dog is moved out of engagement with the output shaft and gradually comes to rest with the starter turbine "run down".

The driving dog is thus held out of engagement during the time that the engine is running. When the engine is stopped, however, the oil pressure falls until the driving dog spring gradually takes control of the dog position and extends it into re-engagement with the output shaft. This action, will give rise to metallic clicking until they engage fully. This sound is of short duration and should be recognised by the ground personnel.

INSPECTION.

The turbo-starter requires no inspection during service. Examine the breeches and gas delivery pipes, however, in accordance with the requirements of the Inspection Schedule.

SERVICING

When reloading the breeches after approximately every 50 shots, wipe the breech caps and contacts clean and smear the cap-retaining threads lightly with graphite grease (Specification XG. 285.) No other servicing is required.

PERCENTAGE TACHOMETER GENERATOR

DESCRIPTION

General

Mounted on the front face of the air intake casing gear chamber, this engine-driven generator is employed in conjunction with a Kelvin and Hughes type KB.140/01 percentage tachometer indicator in the aircraft cockpit to give an accurate indication of engine speed in terms of percentage, the 100 % reading being the normal maximum r.p.m. of the engine.

Construction

Housed within a light-alloy cylindrical case closed by a square end cover, the unit comprises a two-pole permanent magnet rotor mounted in two ball bearings contained in the drive end of the case and the end cover respectively, the rotor revolving within a three-phase stator. Each laminated stator and its winding is secured permanently within the case and is impregnated to resist the effects of Ester-based lubricants since oil is permitted to circulate within the generator to lubricate the rotor bearings.

The unit is rendered leak-proof by a joint washer interposed between the case and the end cover, the stator leads being connected to an hermetically-sealed, three-pin Cannon-type plug mounted on the side of the casing.

A short, square-section drive shaft accepts the drive from the engine, being coupled to the rotor shaft by a spring drive, thus enabling slight malalignment of the generator to be taken up without affecting its operation. The spring drive is connected to the rotor shaft by a pin which is designed to shear at a pre-determined torque and isolate the generator from the engine in the event of mechanical failure of the unit.

INSPECTION ....

INSPECTION

The generator requires no attention other than visual checks. If a fault develops in the speed indicating system which is traced to the generator, remove the unit and fit a replacement, having first made sure that the replacement is serviceable as described hereunder.

SERVICEABILITY TEST

Before a replacement generator is put into service, it is advisable to submit it to the following bench test.

1. Make sure that there is sufficient oil in the generator to provide lubrication of the bearings for a brief test run,
2. Check the unit by hand for free rotation.
3. Couple the unit to a variable-speed electric motor capable of driving the unit at a maximum speed of 4,200 r.p.m., then connect the generator electrically to a KB.140/01 indicator of known accuracy.
4. Start the motor and increase its speed gradually to maximum r.p.m., the indicator must be in synchronism from the 5% marking throughout the remainder of the range.
5. Stop the motor and dismantle the generator from the test rig at the satisfactory conclusion of the test.

As an alternative to the bench test, the generator may be fitted to the engine and its performance checked by proof-running the engine after installation of the replacement unit.

HYDRAULIC PUMP

General

To supply the aircraft hydraulic services, a Messier hydraulic pump is fitted to the left-hand rear face of the accessory drive housing.

The pump is of the self-regulating type and functions in conjunction with a pressure accumulator and reservoir in the aircraft.

PRINCIPLE OF OPERATION

General

As stated at the commencement of the Description the pump functions in conjunction with a pressure accumulator and a reservoir in the aircraft, the installation (for purposes of this explanation) being considered as a closed circuit. By virtue of its self-regulating device, the output of the pump is infinitely variable, acting as a positive-displacement pump for pressures ranging from zero up to the pre-determined nominal operating pressure of the system. Thereafter, the delivery is controlled by the self-regulating device up to the maximum pressure for the system.

Output under pressure to accumulator

Upon starting, rotation of the inclined plate imparts (through the oscillating plate) a reciprocating movement to each piston, which at each revolution causes a suction phase and a delivery phase in each pump cylinder.

The diagram illustrates both the suction and delivery phases of the pump. Dealing first with the lower pump unit, the piston of which is on its suction stroke, the spring-loaded delivery valve is pressed against the sleeve and the piston has been withdrawn until the suction parts in the sleeve are uncovered. The resulting depression in the chamber draws in hydraulic oil from the suction chamber.

As the piston is driven in on its delivery stroke the suction ports in the sleeve are covered and the oil, under compression, opens the delivery valve and is expelled via the self-regulating device chamber and the delivery connection to the pressure accumulator. During this cycle of operations, note that the self-regulating device is inoperative and that the helical grooves in the pump regulating collar are not aligned with the calibrated holes in the sleeve.

The pump continues to function in the foregoing manner, gradually building up pressure in the accumulator until the nominal operating pressure for the hydraulic system is attained.

Once the nominal operating pressure has been reached however, the self-regulating device comes into operation to control the pump delivery; this is achieved as follows. Pressure in the delivery line (and hence the self-regulating device chamber) now balances the loading of the calibrated spring. As the nine plunger pumps continue their delivery, this pressure increases and acting upon the area of the regulating piston head, overcomes the loading of the spring, thereby depressing the driving plate which, in turn, moves the pump regulating collars, thereby aligning the collar grooves partially with the calibrated holes in the sleeves. Pump delivery now occurs in two phases.

During the first part of its delivery stroke, a proportion of the oil passes radially outwards through the holes in the piston wall to the annular duct, thence via the pump sleeve holes and aligned grooves in the regulating collar to the self-regulating return chamber to be conveyed back to the system reservoir.

As the delivery stroke progresses, the annular duct in the piston passes out of alignment with the sleeve holes and the fluid remaining in the chamber

becomes pressurised. This pressure increases until the loading of the delivery valve spring (now augmented by the delivery pressure acting upon the underside of the valve) is overcome and the fluid is expelled to the accumulator at high pressure.

It will be appreciated that as the pump delivery (accumulator) pressure increases towards the maximum for the system, so will the self-regulating device piston be depressed increasingly. The grooves in the bores of the regulating collars will align with an increasing number of calibrated holes in the pump sleeves and so increase the quantity of fluid by-passed back to the system reservoir through the self-regulating return chamber. Pump delivery will decrease proportionately until the maximum pressure for the system is attained, whereupon the relationship of the regulating collars to the pump sleeves will be such that all the fluid drawn in during the suction strokes of all nine pump units will be by-passed to the self-regulating return chamber and thence to reservoir, delivery to the pressure accumulator being nil. This is the condition illustrated diagrammatically.

When however, a hydraulic circuit is operated (e.g. lowering undercarriage) the volume of fluid contained in the pressure accumulator dimishes, with a corresponding decline in pressure in the delivery line and, hence the self-regulating device chamber. Immediately the pressure acting upon the regulating piston head is relieved, the calibrated spring regains control of the device and the pump regulating collars are repositioned. Pump delivery to the pressure accumulator is then resumed in the manner already desribed, the delivery and self-governing return continuing until the maximum pressure in the system is again achieved.

GENERATOR

Mounted on the rear face of the accessory drive plate and on the right-hand side, the generator is dowel located and secured by a multi-jointed manacle clamp. The unit supplies the power for all the aircraft electrical services. To maintain constant voltage output over the wide speed range of the generator, the unit must be operated in conjunction with a 75 watt Ducellier type 710 P.11 carbon pile regulator or its equivalent.

Construction

A section view of the unit is shown in the diagram. For reasons of clarity, the ducting has been omitted.

The unit is of the shunt-wound self-exciting type and comprises the following main sub-assemblies.

1. Mounting flange and drive end bearing.
2. Frame and field assembly.
3. Armature.
4. Commutator end frame and brush gear.
5. Torque shaft and shock absorber.
6. Terminal block
7. Cooling ducts.

BRISTOL SIDDELEY ENGINES LTD.

AERO ENGINE SCHOOL

SECTION 5
CONTENTS

1 BEFORE INSTALLATION

2 INSTALLATION

3 ENGINE STARTING

4 GROUND RUNNING

5 ADJUSTMENTS

6 FAULT DIAGNOSIS

REMOVAL AND INSTALLATION OF ORPHEUS 801 SERIES ENGINE IN FIAT G91. AIRCRAFT

GENERAL

During the removal and installation procedures observe the following general practices :-

1. Use only the tools quoted in the tool list.

Removal

2. Blanking covers or devices must be fitted to all pipe ends and adaptors etc., as they are disconnected or detached from the engine and airframe.
3. It is essential that the trunnion support clamps of the engine bearers are kept in their original positions.

Installation

4. The procedure for replacing the engine is the reverse of that for removal.
5. Meticulous care must be taken to ensure that the entire length of the intake duct is clear and free from foreign matter.
6. Leave the blanks etc., in position until immediately prior to making the appropriate connections.
7. Use ONLY the recommended oils and greases.

Removal of Rear Fuselage

1. Remove the fourteen dzus type fasteners and access panel from the dorsal fin to gain access to the following items :- then
   a. Unscrew the radio aerial
   b. Unscrew the electrical connector socket
   c. Unscrew the hydraulic pipes (two off self-sealing couplings)
   d. Disconnect the rudder control rod
   e. Disconnect the elevator control rod (see Fig: 1.)
2. Unscrew the 'B' screws of the air intake scoops on each side of the rear fuselage and remove scoops .....

remove scoops, also the screws in the flanged pipes which are ducting the air flow between the jet pipe and jet pipe shroud. Remove pipes (See Fig: 2.)

3. Remove the jet pipe fuel drain pipe circlip located in the underside of the rear fuselage stabilisation fin, and remove drain (See Fig.3)

4. Remove the engine fuel drain circlip located in the underside of the front fuselage forward of the stabilisation fin and remove drain (See Fig: 5.)

5. Assemble the three fuselage cradle mounting adaptors to the port, starboard and underside of the rear fuselage (See Figs: 4 and 5)

6. Unscrew the four cover plates from the rear fuselage attachment points (See Fig: 6)

7. Manoeuvre the fuselage cradle trolley underneath the rear fuselage and connect the trolley pick up points to the mounting adaptors on the fuselage (See Fig:7)

8. Open the three access panels on the port, starboard and underside of the front fuselage (See Fig: 8)

9. Through the underside access panel disconnect the drag parachute connection which is situated in the fuselage lower port side (See Fig:4)

10. Remove the four nuts and washers from the rear fuselage assembly points, remove the rear fuselage with trolley (See Fig: 9)

11. Through the port access panel disconnect the following items :-

    a. Unscrew the three hydraulic pipes from the aircraft connections. (Self-sealing couplings See Fig.10)

    b. Disconnect the Cartridge starter exhaust pipe from the fuselage and engine, and remove pipe.

    c. Unscrew the igniter lead from engine.

    d. Unscrew the fuel tank pressurisation pipe from engine (See Fig: 10)

Through the .....

12. Through the underside access panel the following items are to be disconnected:-

a. Throttle control rod from engine (See Fig: 10)

b. Main fuel pipe from engine fuel pump

c. Thermo-couple connections

d. Generator cables from generator (three off)

e. Compressor R.P.M. electrical socket

f. Fuel pressure warning electrical socket

g. Oil pressure warning electrical socket

h. Igniter lead from engine (See Figs:10 and 11)

13. From the starboard side of the front fuselage of the access panel disconnect the louvre and engine breather pipe (See Fig: 12)

14. Through the starboard access panel disconnect the following :-

a. Engine breather pipe from engine remove pipe

b. The electrical sockets from the starter breeches pieces (Two off. See Fig: 12)

c. Remove breeches piece exhaust pipes from the fuselage top starboard, and breeches piece (Two off. See Fig.12)

d. Cabin pressurisation pipe from engine (See Fig: 10)

15. Manoeuvre the engine removal stand into position (Fig:13) and connect the three lifting links to the lifting points of the two trunnion arms and flame tube casing (See Fig:14)

16. Disconnect the engine centre balance from the fuselage (See Fig:15)

17. Remove the two half trunnion support clamps (See Fig: 16)

18. Remove engine with stand. (See Fig:14)

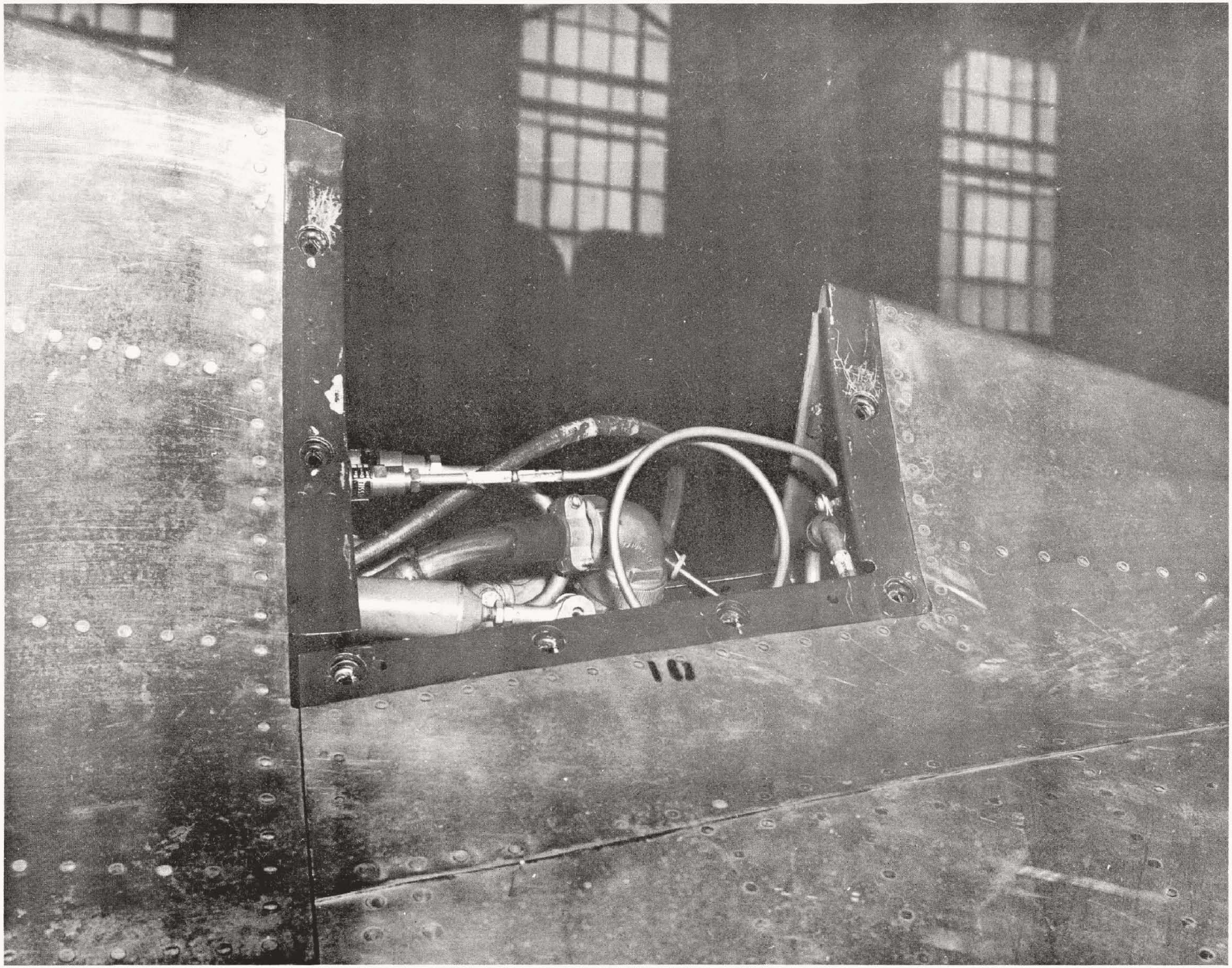
10

CAUTION:
DISC. JET
& DRAINS
REMOVING
FUSELAGE
TORQUE

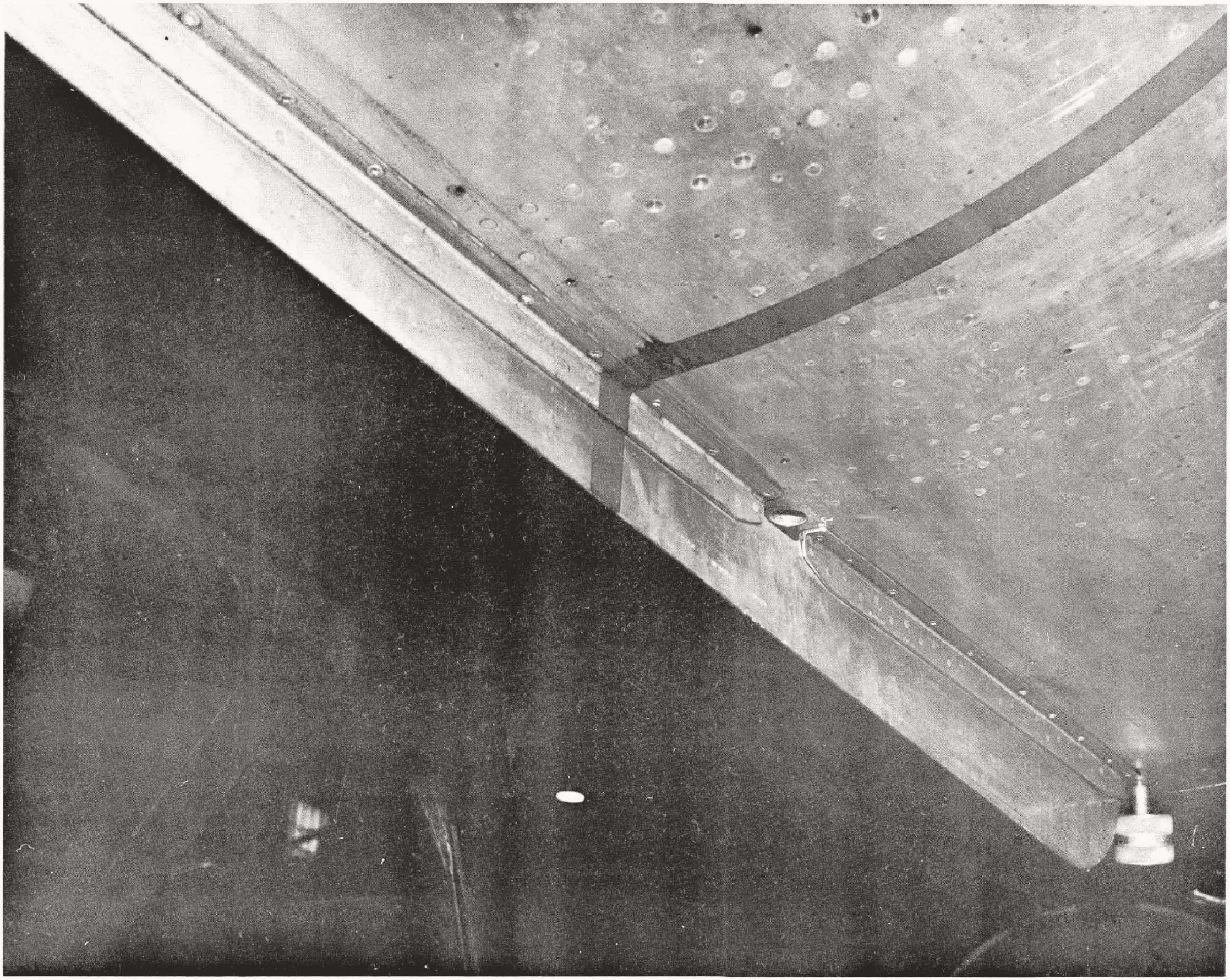

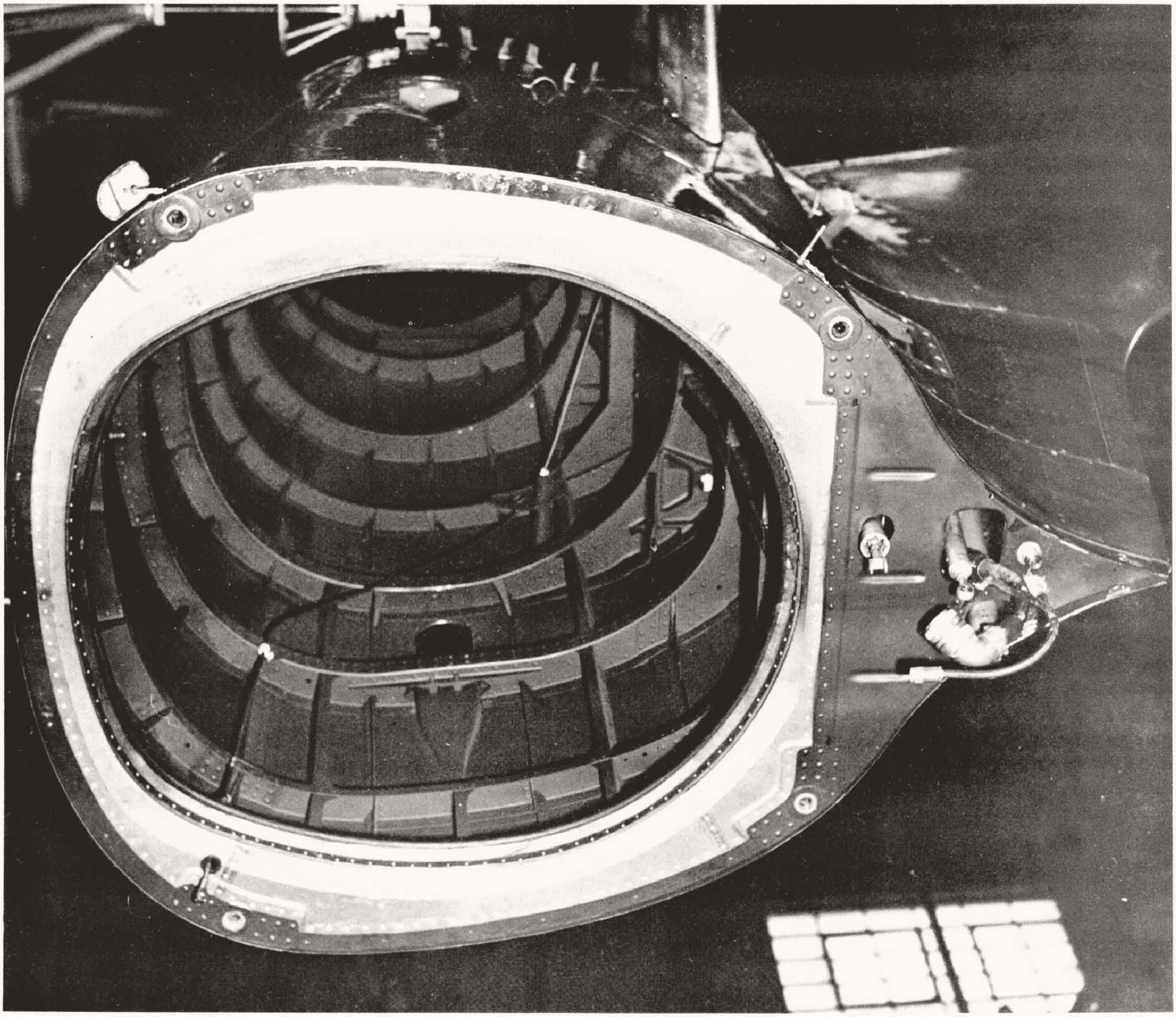

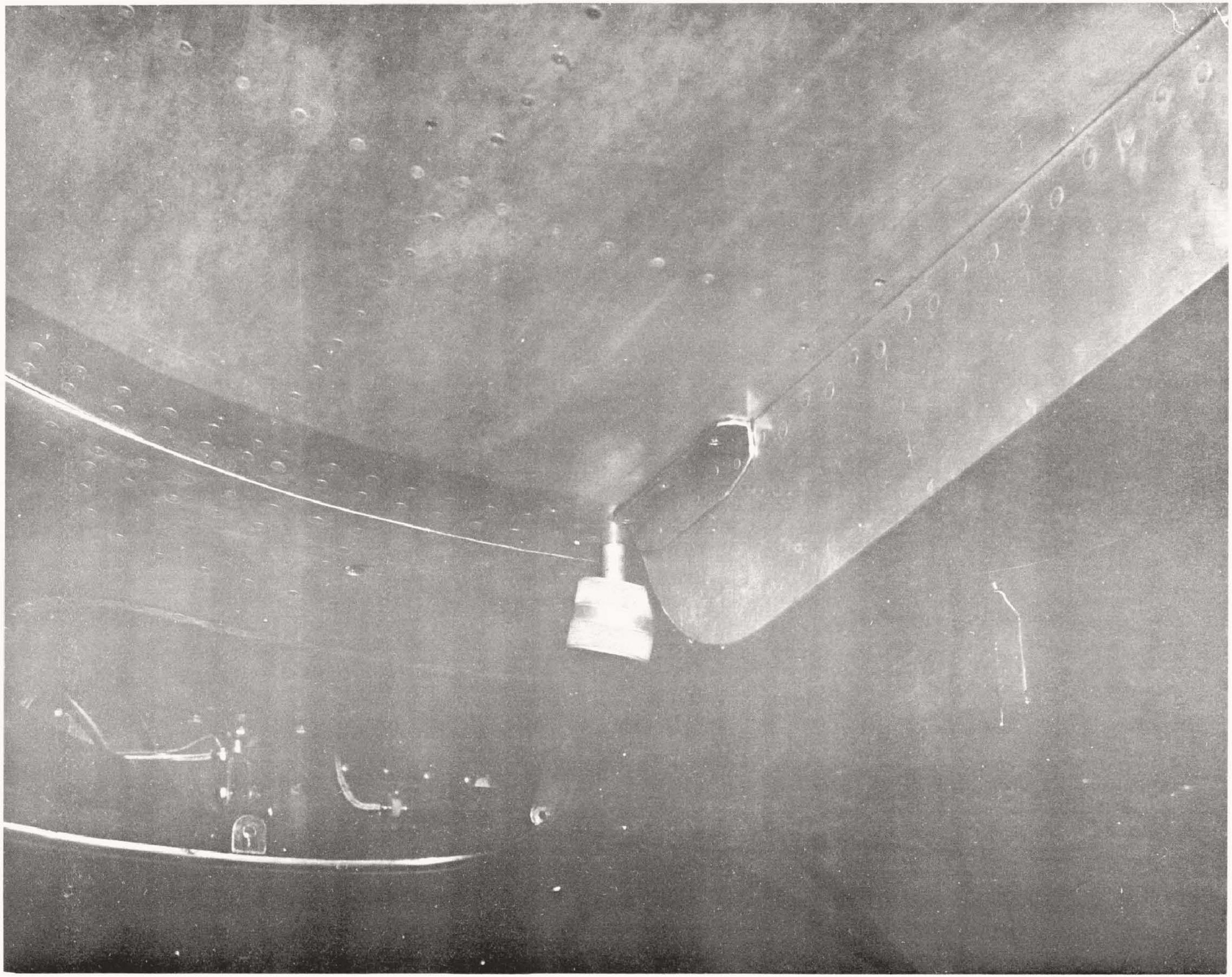

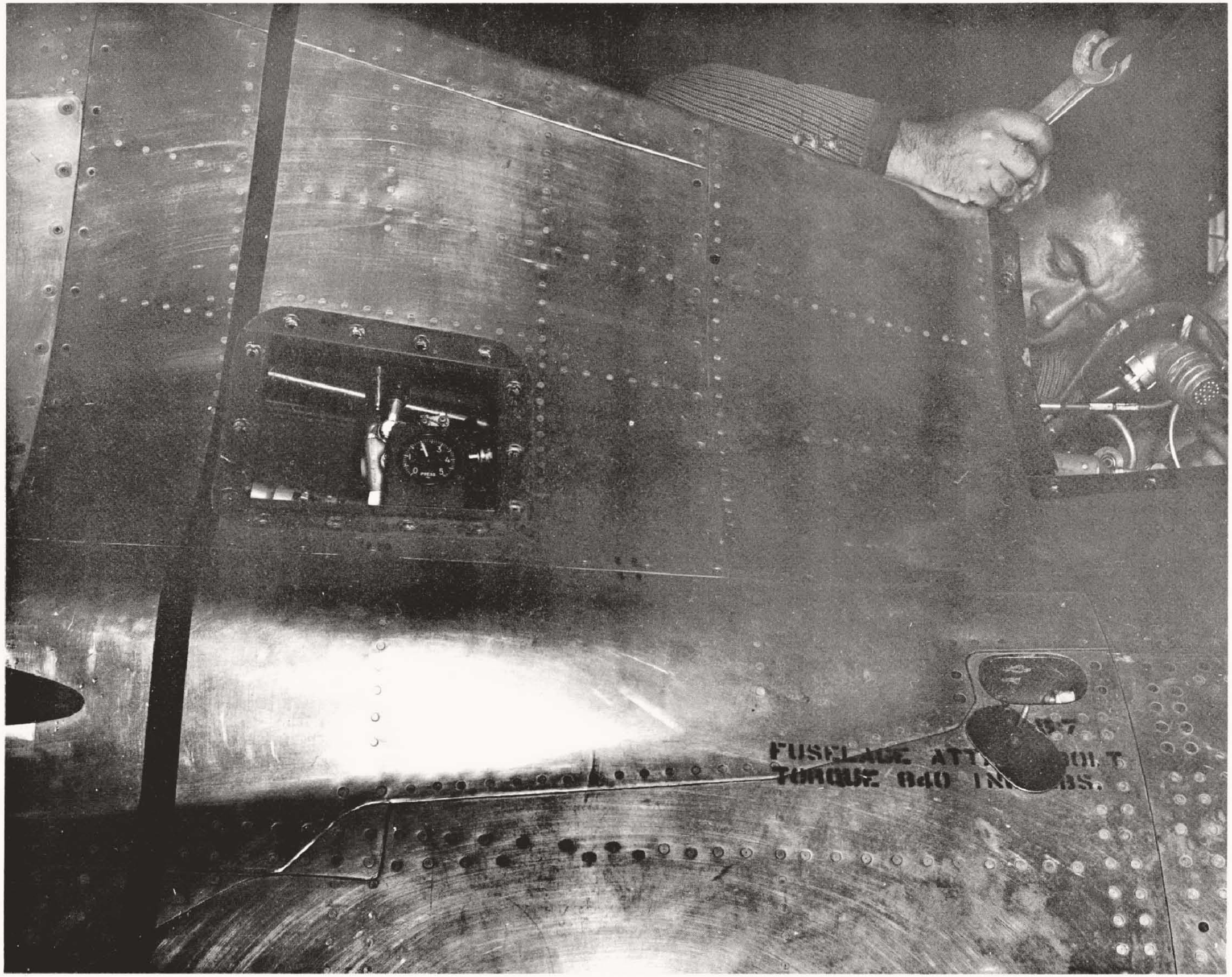
FUSELAGE ATT
TORQUE 840 IN

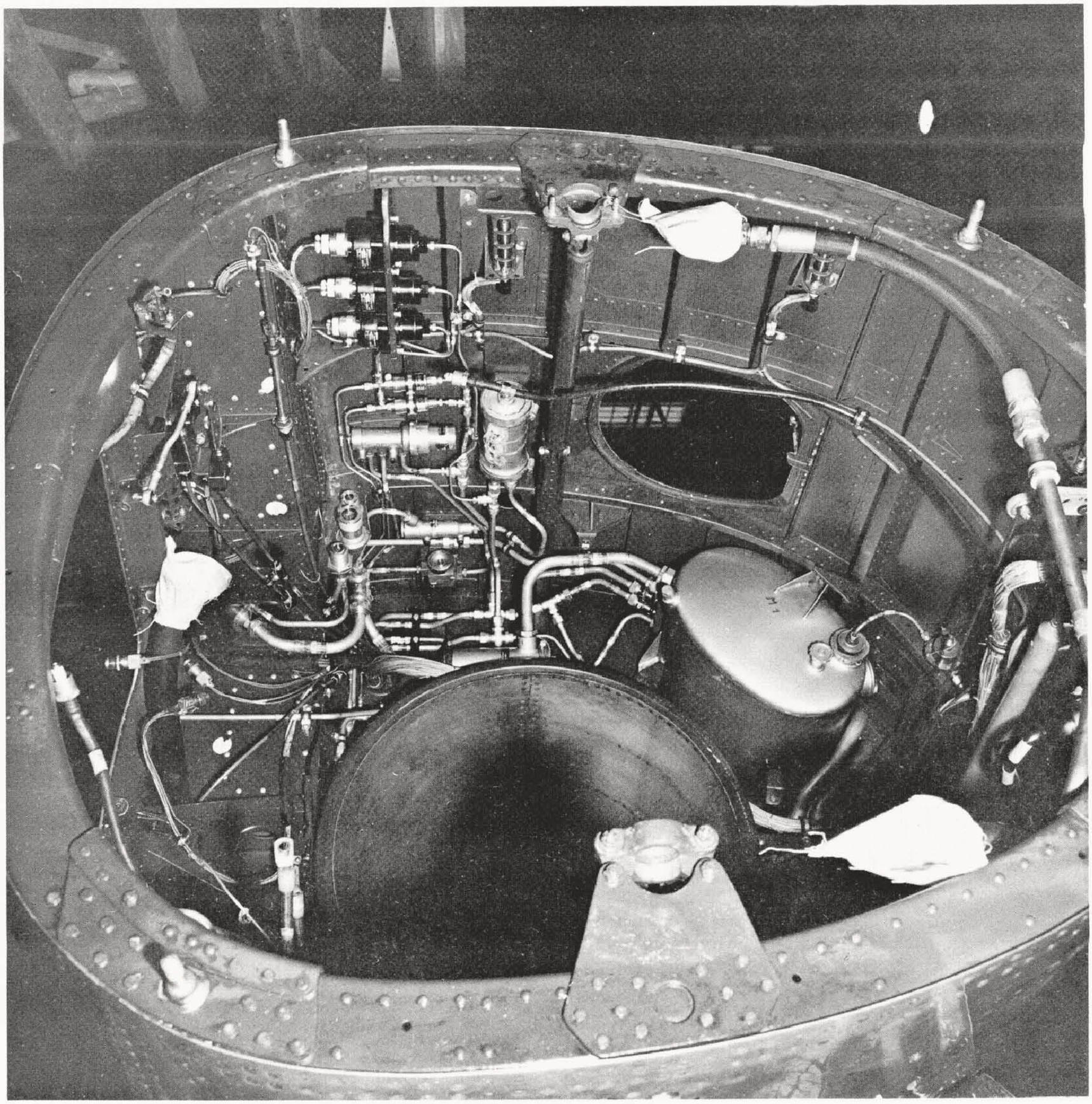

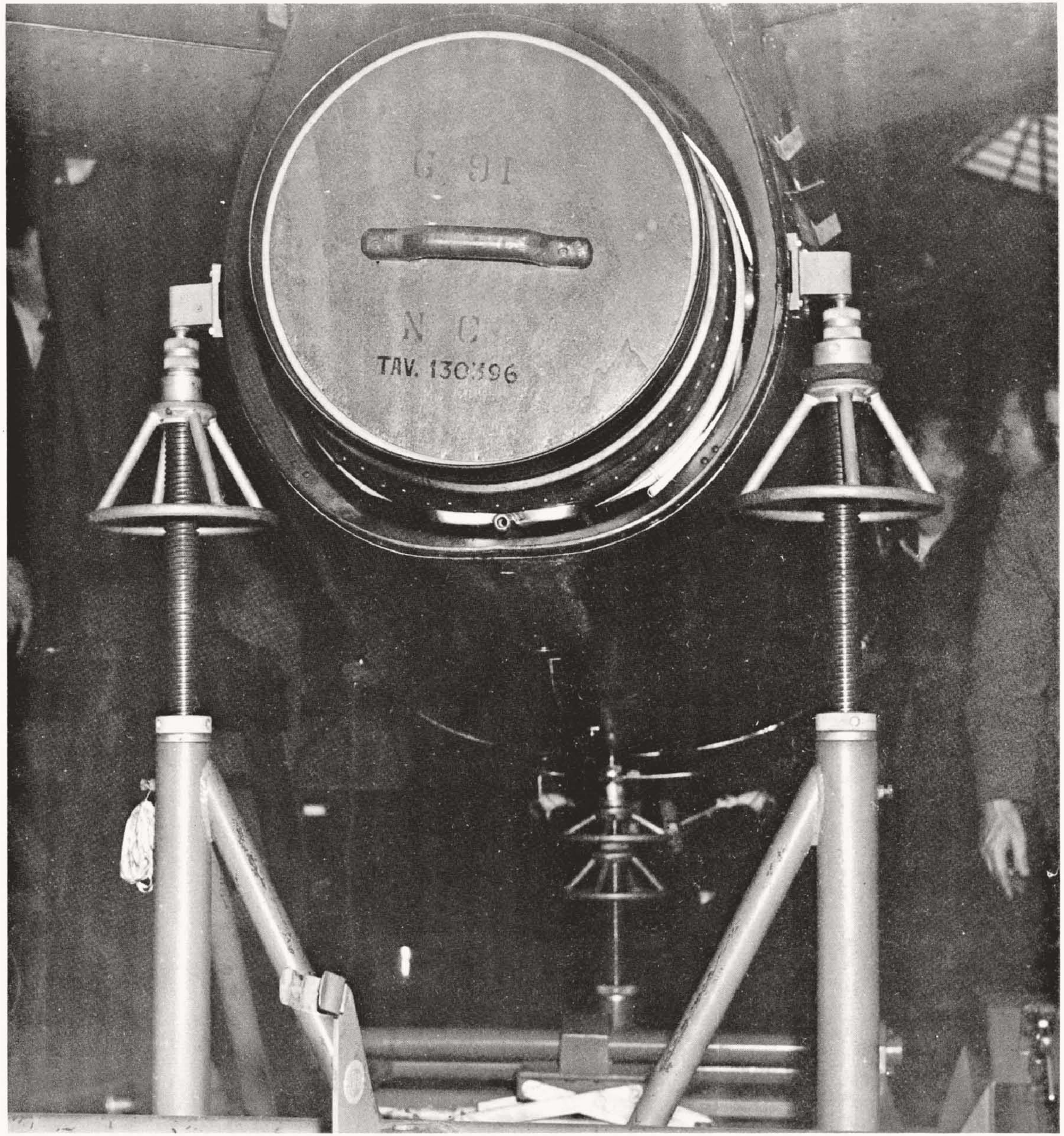
TAV. 130396

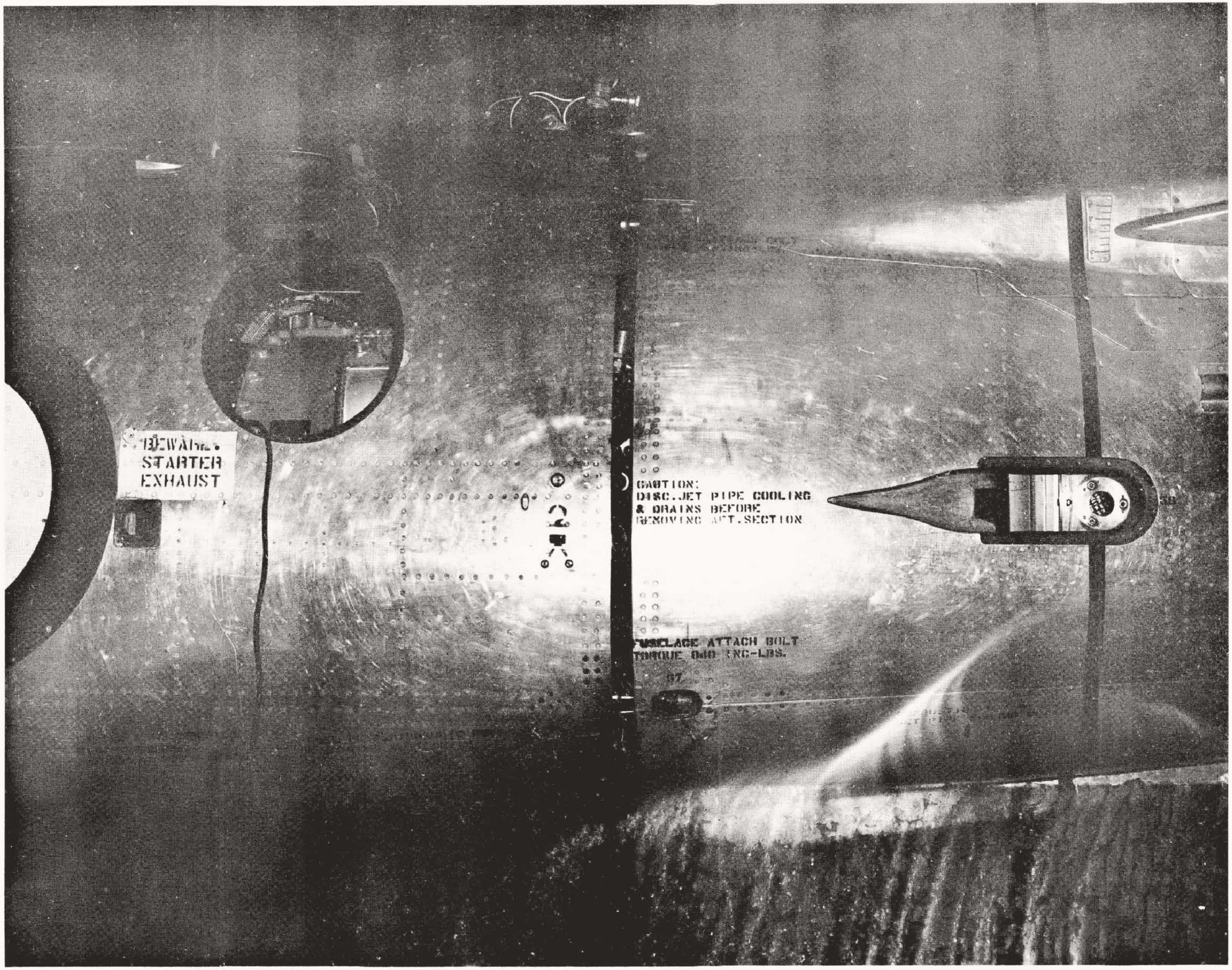
STARTER
EXHAUST
CAUTION:
DISC. JET PIPE COOLING
& DRAINS BEFORE
REMOVING AFT. SECTION
FUSELAGE ATTACH BOLT
TORQUE 0-10 IN-LBS.

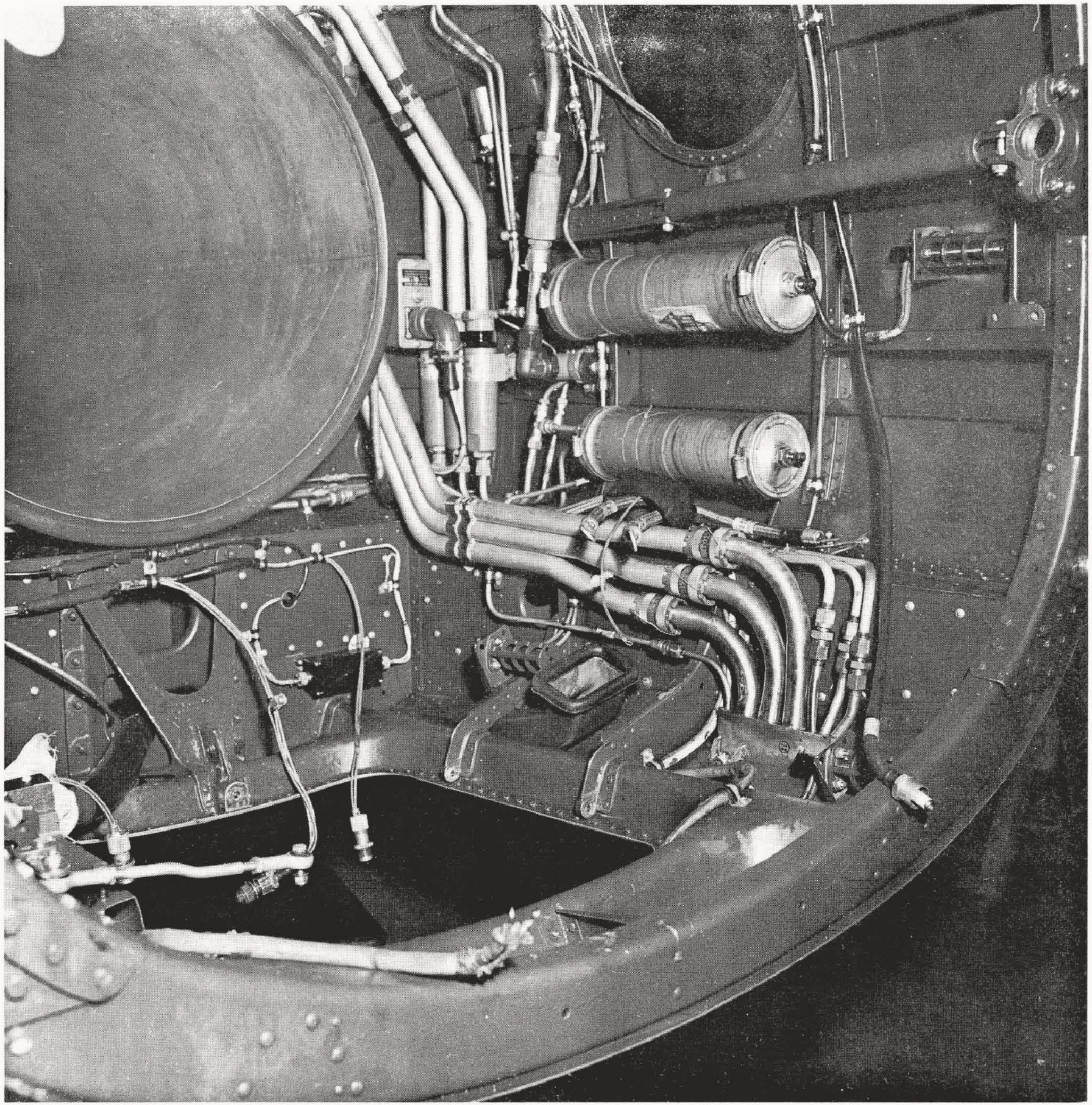

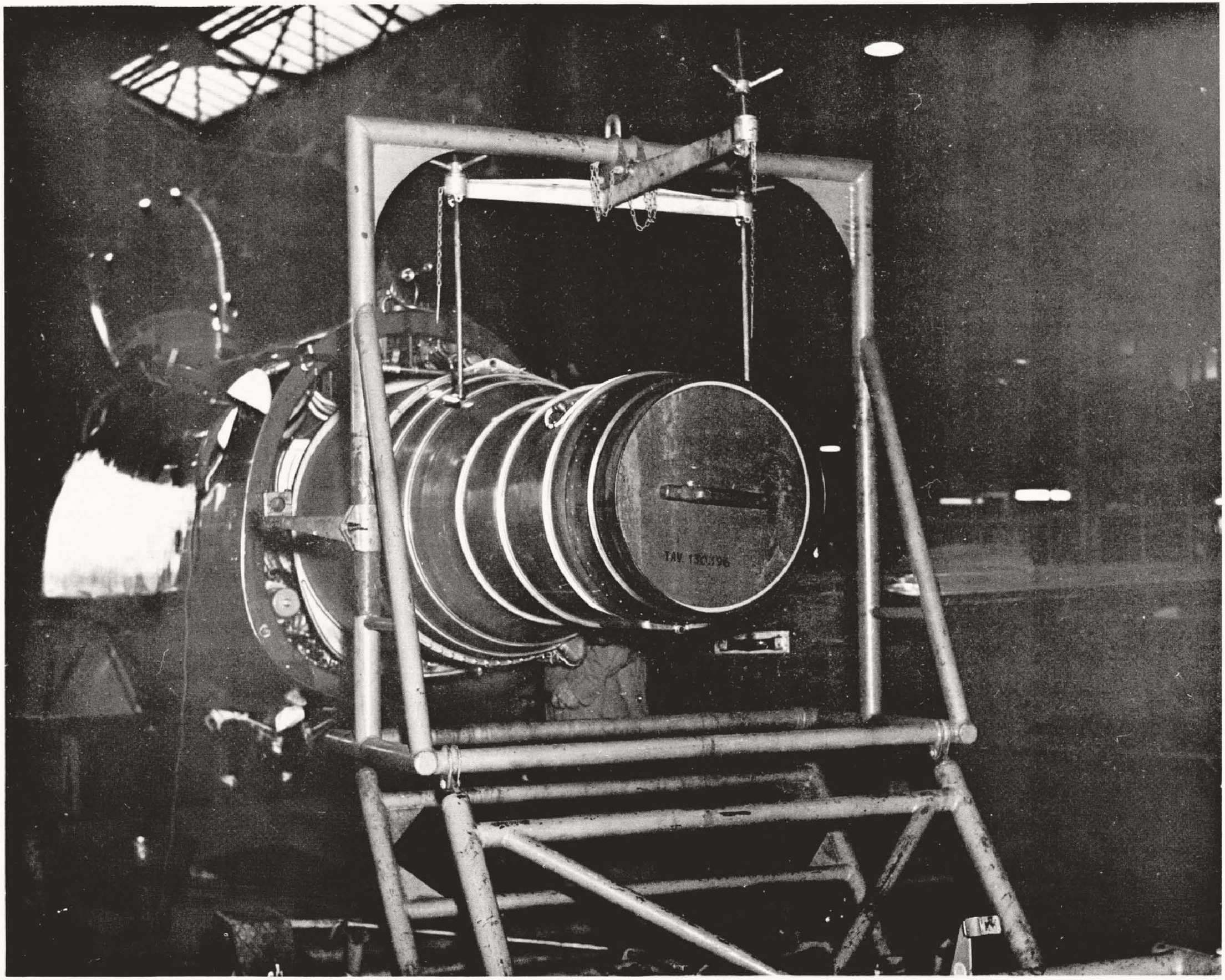
TAV 130396

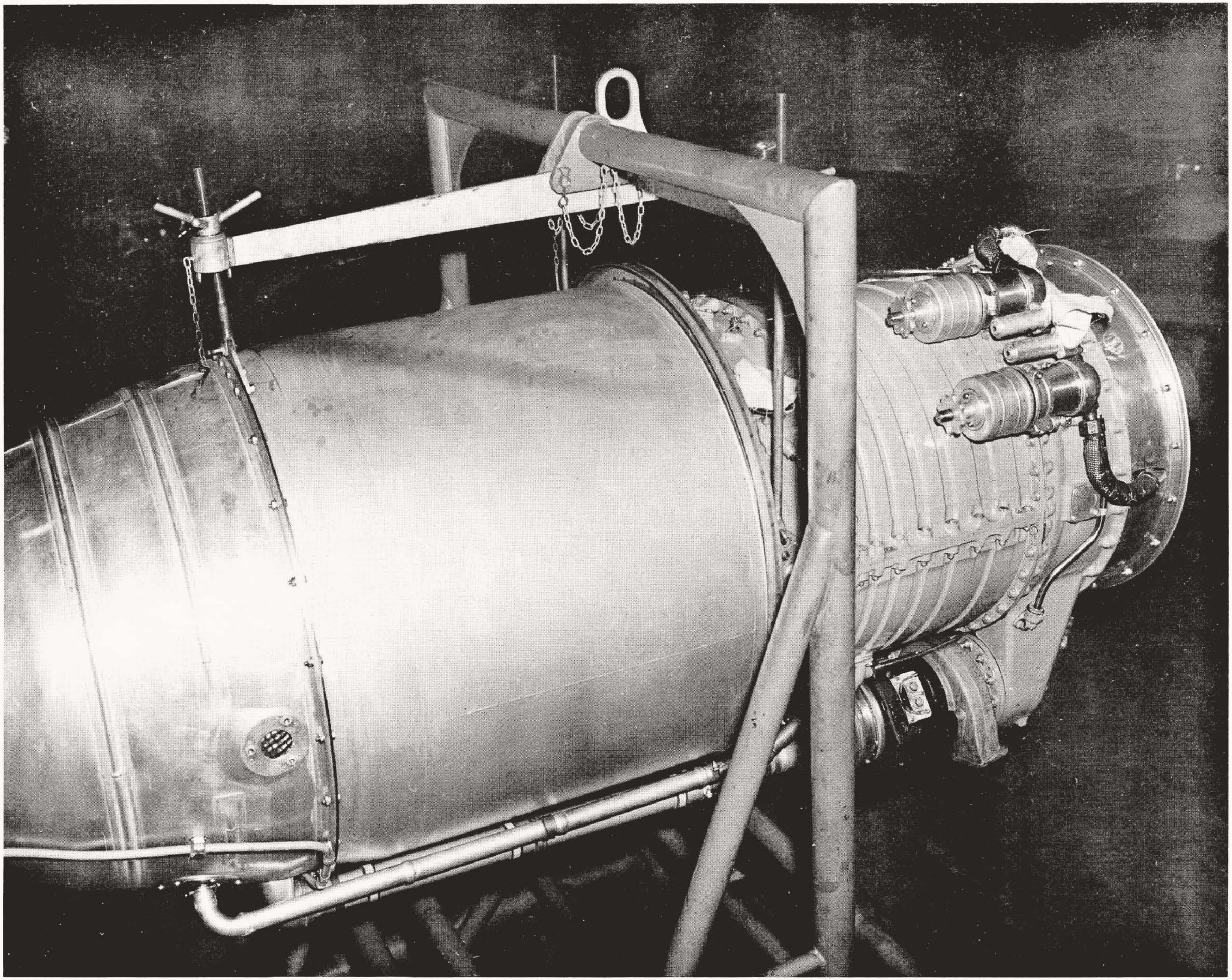

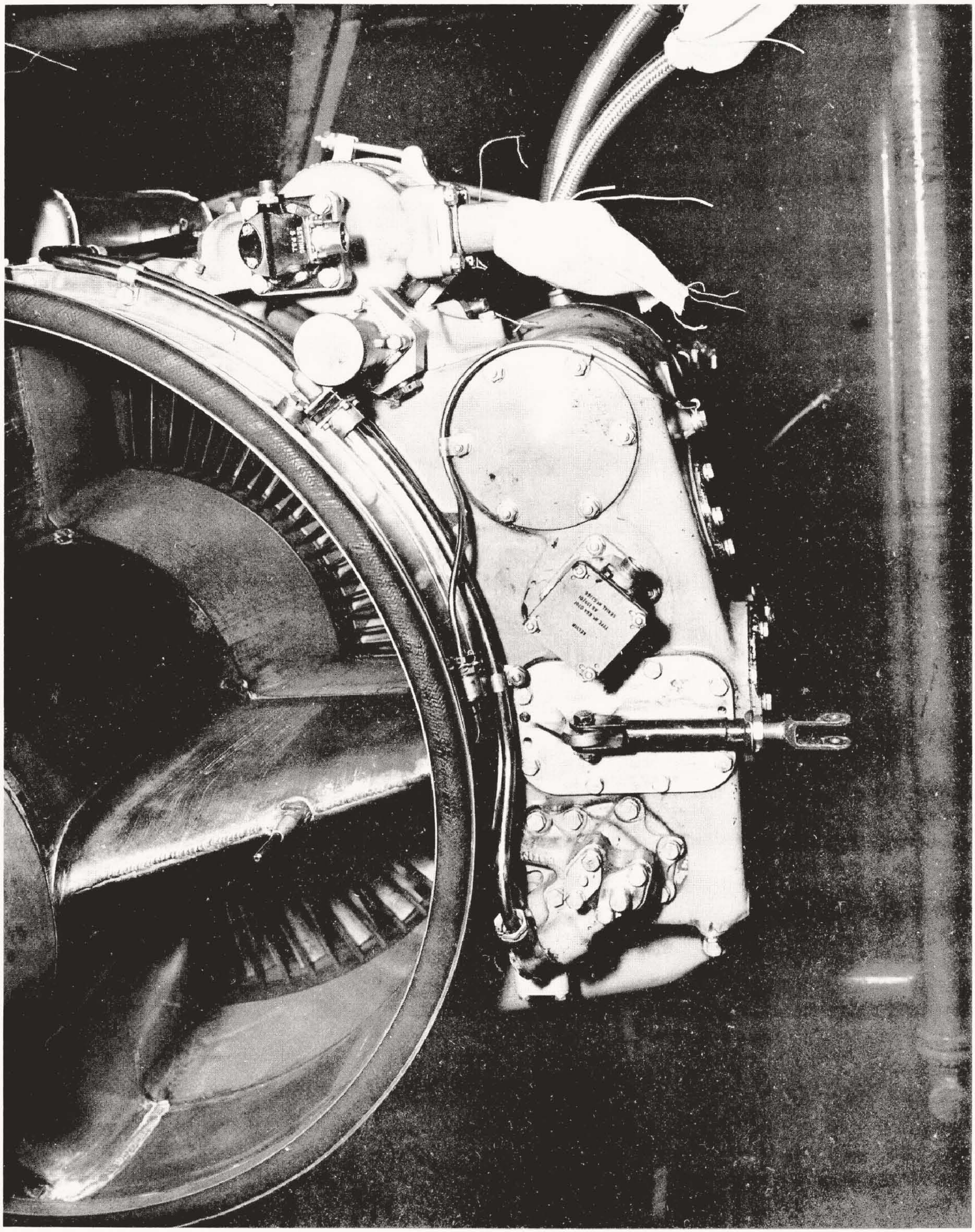

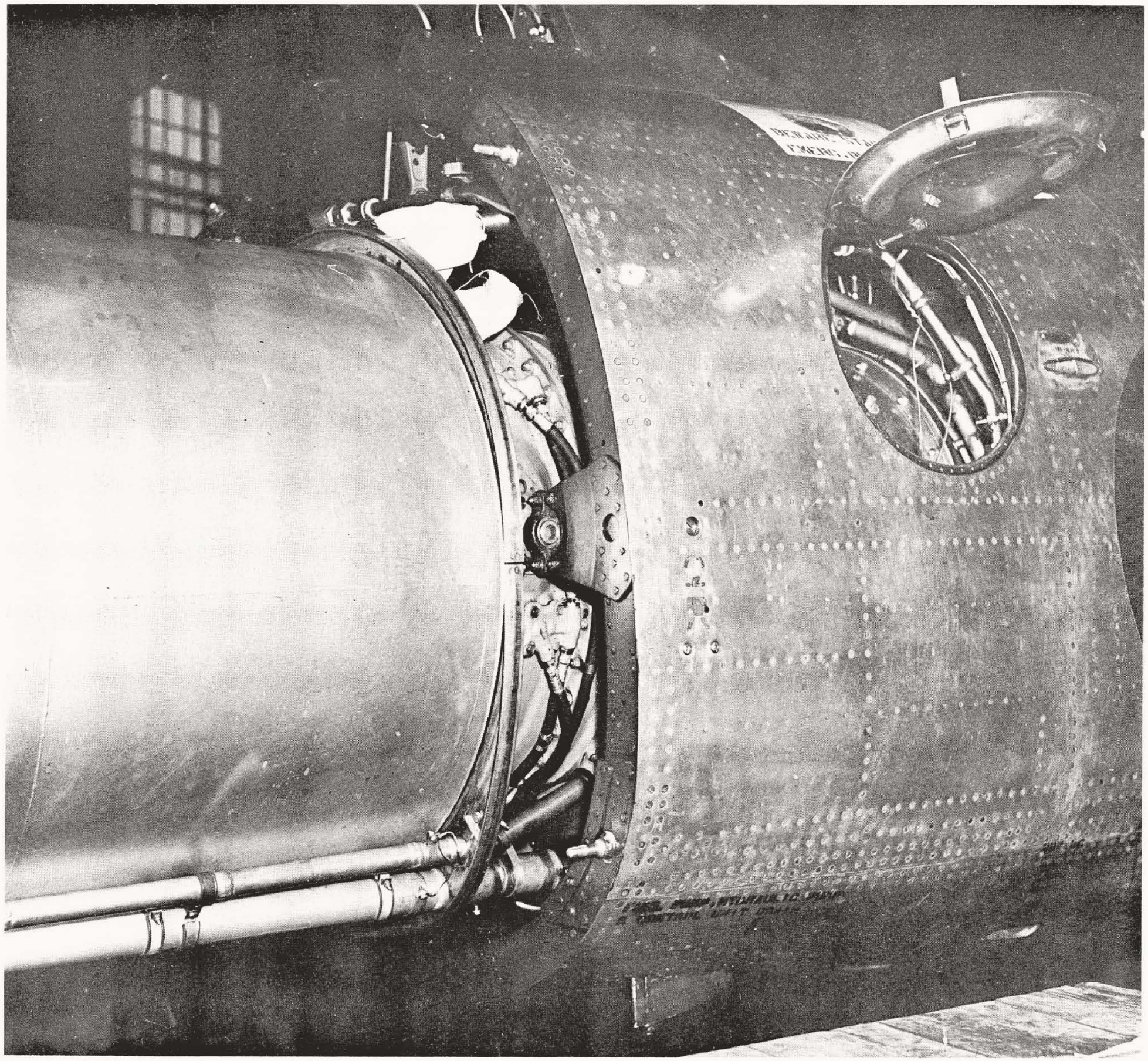

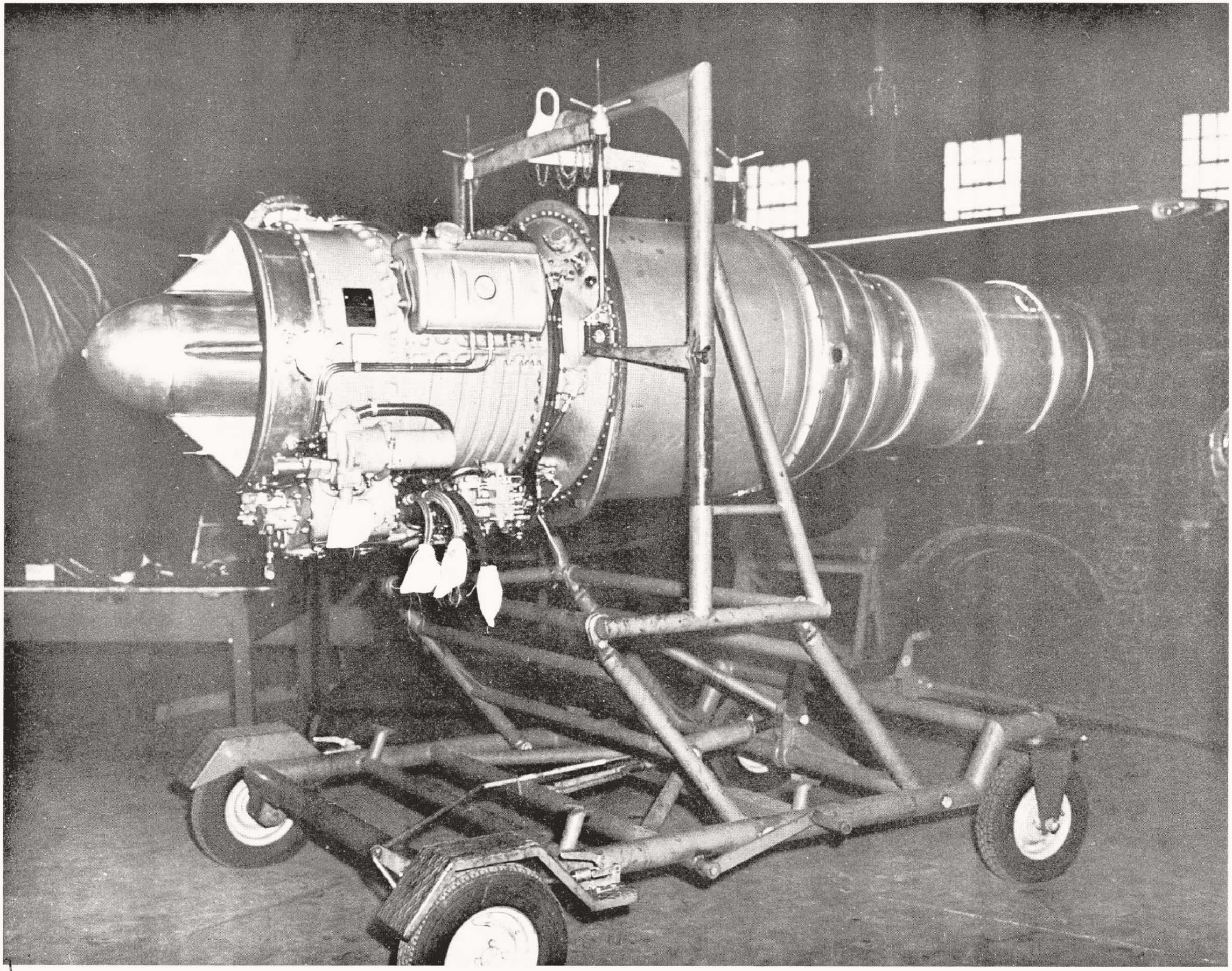

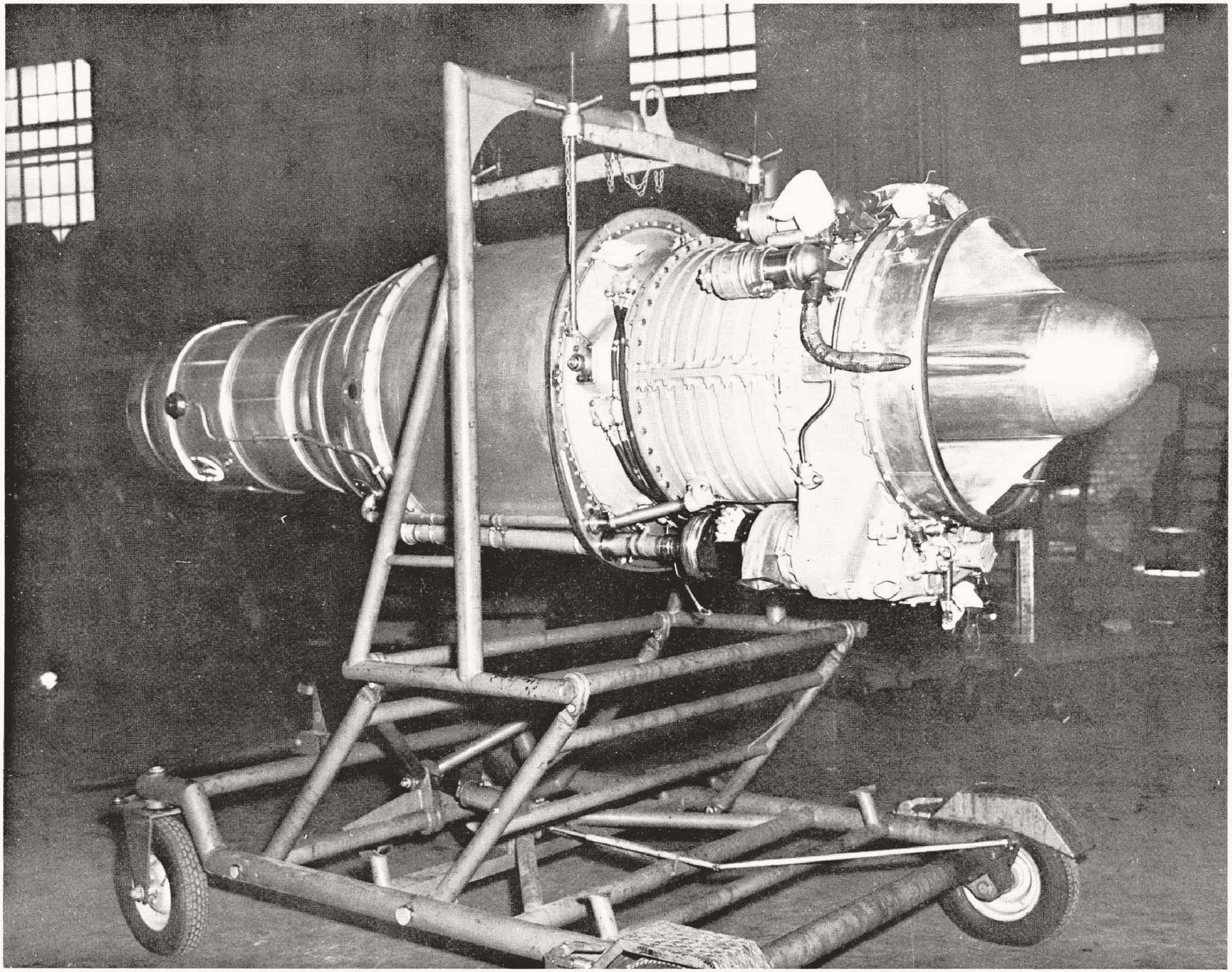

GROUND RUNNING

General

This chapter deals with the checks to be made before ground running a newly installed engine and details the starting and stopping procedure, together with "after installation" and "rountine" ground testing.

Warning - A PILOT'S EJECTION SEAT IS FITTED IN THIS AIRCRAFT. This equipment is a source of potential danger to personnel and of damage to the aircraft. If the firing mechanism is operated while the aircraft is on the ground, the seat will be ejected, the aircraft may be damaged and injury may be caused to any person in, or leaning into, the cockpit. The following precaution should therefore be taken before any individual is allowed to enter the cockpit. The N.C.O. i/c airframe servicing must ensure that the face blind is secure and that the four safety pins are in position; these pins are:-

1. Face blind pin
2. Sear safety pin
3. Emergency handle pin
4. Drogue sear safety pin

PREPARING FOR SERVICE

General

After the E.C.U. has been installed and the operations detailed in the Aircraft Maintenance Manual are completed, make the following installation proof checks.

1. Remove the storage blank from the combined control unit drain.
2. Examine all external fittings and accessories...

accessories (as far as possible) for any damage caused during installation.

3. Remove the air intake blank and check that the intake is perfectly clean; refit the blank.

4. Remove the blank from the jet pipe and inspect the interior of the pipe. After ascertaining that it is perfectly clean, refit and secure the blank.

5. Using the tool kit protractor, check the synchronisation of the combined control unit throttle lever with the cockpit throttle lever at STOP. Operate the control and ensure that the full range of movement is obtained. Return the throttle lever to STOP.

   Protractor FB.207246

6. Connect a 28 volt D.C. external supply to the aircraft.

7. Ensure that the throttle lever is at STOP, then check the function of the booster coils and igniter plugs. To do this, depress the IGNITE button; the continuous sparking at the igniter plugs will be clearly audible. At the completion of the check, release the IGNITE button.

8. Bleed the fuel system as detailed subsequently. During this procedure, verify that the low fuel pressure warning lamp is extinguished when the FUEL BOOSTER PUMP switch is set to ON.

9. Position suitable containers beneath the drain outlets and carry out two wet motoring cycles as described later in this Chapter. Check (as far as possible) for fuel and oil leaks; select FUEL L.P. COCK CLOSED and switch the FUEL BOOSTER PUMP off. Observe that fuel drains freely.....

from the engine and jet pipe drains, thus proving that they are clear.

10. Perform two dry motoring cycles as described subsequently to expel accumulated fuel, and to check for a leaking throttle valve shut off cock.

Bleeding the fuel system.

Bleed the fuel system as follows:-

1. Connect an external 28 volt D.C. electrical supply to the aircraft.
2. Open the engine access panel at the bottom of the fuselage.
3. Cut the locking wire to release the bleed connection on the fuel pump end cover.
4. Fit a suitable bleed pipe to the valve connection and position the open pipe end in a suitable container. Unscrew the connection one turn.
5. Arrange for an assistant in the cockpit to close the appropriate circuit breaker switch the FUEL BOOSTER PUMP on and move the FUEL L.P. COCK to OPEN, then for a furthur assistant to rotate the turbine slowly with a suitable probe introduced through the jet pipe.
6. When air-free fuel emerges, close and tighten the bleed connection, remove the bleed pipe, cease turning the engine and signal for the FUEL BOOSTER PUMP to be switched to OFF and for the FUEL L.P. COCK to be moved to CLOSED.
7. Wire lock the bleed connection.
8. Close the engine access panel.
9. Disconnect the external electrical supply.

Wet motoring cycle.

A wet motoring cycle provides a check on the operation of the engine fuel pump and drain systems and, with an engine which is newly installed or has been .....

been inhibited, ensures the discharge of inhibiting fluid from the fuel system.

Note: - Before attempting to start an engine after a wet motoring cycle, always perform two dry motoring cycles to expel accumulated fuel.

1. Remove, clean and refit the low pressure fuel filter element.
2. Position the aircraft and remove the air intake and jet pipe blanks; check the intake and jet pipe for cleanliness.
3. Arrange suitable containers under the drain outlets to collect the fuel which subsequently will drain from the engine.
4. Make sure that both cartridge starter breeches have been loaded.
5. Ensure that the ejection seat firing mechanism is safe (see Warning), then enter the cockpit.
6. Switch on Instruments and Services by closing the appropriate circuit breakers.
7. Have the 28 volt D.C. external power supply connected to the aircraft.
8. Position the undermentioned control at the following settings:-

Throttle lever	...	STOP
Battery isolation switch	...	OFF
FUEL L.P. COCK lever	...	OPEN
FUEL BOOSTER PUMP switch	...	ON

(check that low fuel pressure warning lamp goes out).

Igniter control switch	...	ISOLATION

9. Move the throttle lever forward to the START AND FLIGHT IDLE position (this will open the H.P. Cock).
10. Press the starting button to fire cartridge.
11. When the engine r.p.m. commence to fall,

return .....

return the throttle lever to STOP and, when the engine ceases to rotate, return the FUEL L.P. Cock lever to CLOSED and the FUEL BOOSTER PUMP switch to the OFF position.

12. If the engine is newly installed and is being prepared for service, repeat the foregoing cycle of operations, firing the second cartridge to rotate the engine.

13. Check for fuel and oil leakage through the engine access door.

14. Check the engine and jet pipe drains for obstruction, and note the amount of fuel drainage.

15. Carry out two dry motoring cycles as described subsequently.

Dry motoring cycle

After a wet motoring cycle or an abortive attempt to start, a certain amount of fuel will have accumulated in the engine. This must be cleared by performing two dry motoring cycles to blow the fuel out of the engine before any further attempt is made to start. Failure to do so will result in high temperatures with the risk of damage to the engine.

1. Reload both the cartridge starter breeches.

2. Set the undermentioned controls at the following positions:-

Throttle lever	...	STOP
Battery isolation switch	...	OFF
FUEL L.P. COCK lever	...	OPEN
FUEL BOOSTER PUMP switch	...	ON

(Check that low fuel pressure warning lamp goes out).

Igniter control switch	...	ISOLATION

3. Press the starting button to fire cartridge.

4. When the engine has ceased to rotate, return the FUEL L.P. COCK lever to CLOSED and the

FUEL .....

FUEL BOOSTER PUMP switch to the OFF position.

5. Check that the jet pipe has been cleared of fuel.
6. Disconnect the external power supply.
7. Refit the air intake and jet pipe blanks.

STARTING AND CHECKING

General

Restrict engine ground running to a minimum to avoid fouling the compressor with dust laden air. Keep a constant check on compressor blade cleanliness, by regular inspection.

Safety precautions

Accidents have occurred during the ground running of turbine engines, resulting in injury to personnel and damage to aircraft engines due to carelessness or to ignorance of the danger which exists when so doing. The following safety precautions must always be observed when ground running turbine engines:-

Danger areas

Two danger areas must be avoided when engines are being run on the ground, i.e. the area within a forward radius of 25 feet from the aircraft air intake and the area to the rear of the engine affected by the jet pipe efflux. To avoid damage, position the aircraft so that the jet pipe does not point towards buildings or aircraft within 100 yards, since the heat of the exhaust and stones blwon up from the ground may cause damage. Although 100 yards is considered a safe distance for buildings, aircraft, etc., 50 yards is considered a safe distance for personnel. During all ground running at least one person must be positioned conspicuously in a safe area, to prevent personnel or vehicles entering the danger areas. Where practicable, fence -off the air intake danger area. Personnel must also keep well clear of the starter exhaust gas outlet, during engine starting. Do not wear loose fitting

headgear .....

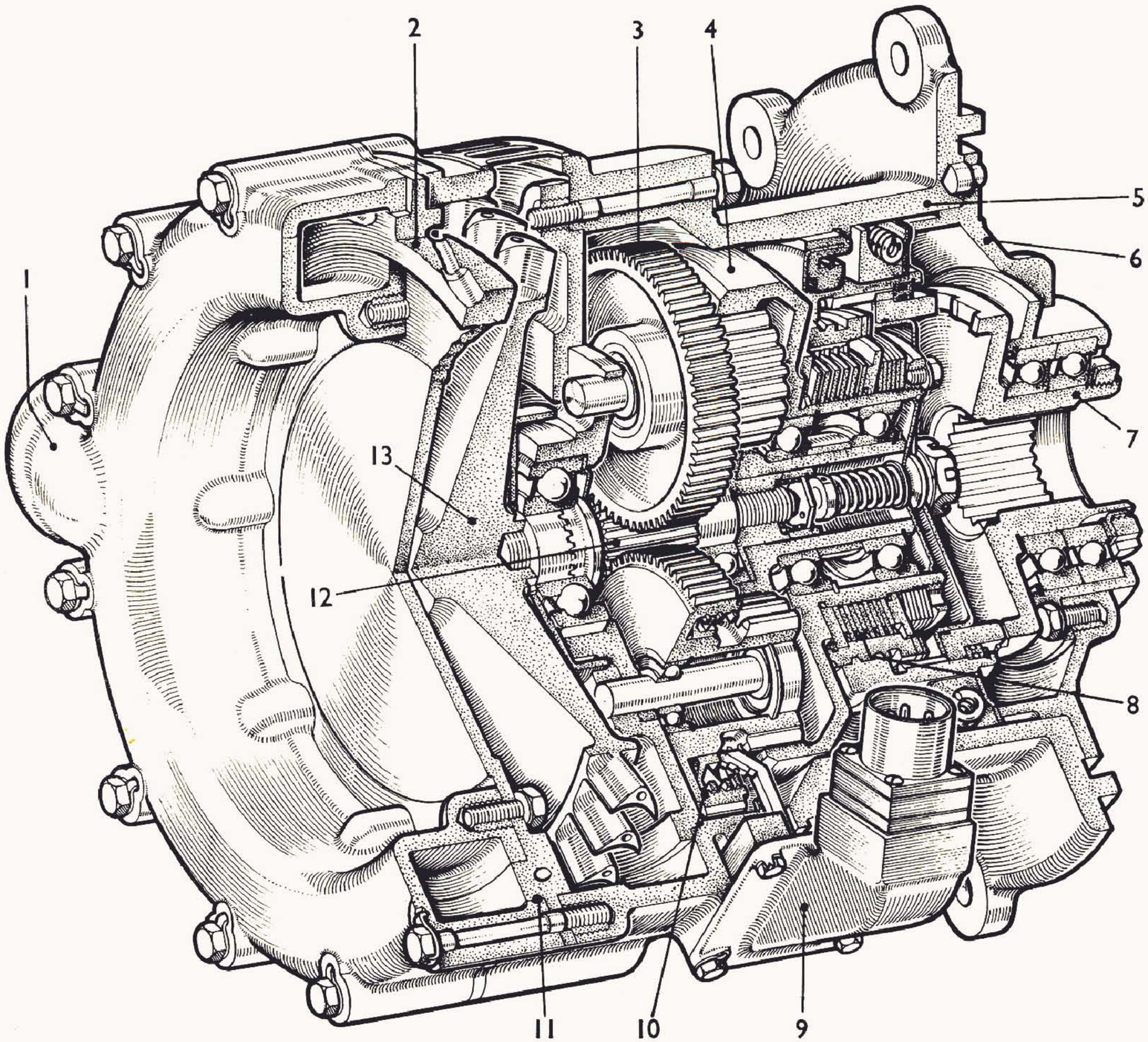

1 AIR INLET CONNECTION
2 NOZZLE RING
3 PLANET GEAR
4 OUTER GEAR
5 STARTER HOUSING
6 END PLATE
7 OUTPUT JAW ASSEMBLY
8 CLUTCH
9 MICRO-SWITCHETTE
10 OVERSPEED GOVERNOR MECHANISM
11 INLET AND NOZZLE RING ASSEMBLY
12 SUN GEAR
13 TURBINE WHEEL ASSEMBLY

ORPHEUS

ROTAX AIR STARTER

TP. 3613

headgear in the vicinity of the air intake danger area and ensure that the pockets of clothing do not contain loose articles which could fall out, e.g. pencils, combs, etc.; considerable damage can be caused by such items being drawn into an engine air intake.

Do not run a turbine engine when the aircraft is standing on a tarmac surface; if concrete standings are not available, position the aircraft on hard earth, and always observe strict precautions against fire.

Personnel protection

Personnel working in the vicinity of turbine engines undergoing ground running should wear ear protectors, e.g. ear plugs or Nosonic ear defenders. When working on the aeroplane, personnel must wear approved type safety overalls.

Preparing the aircraft

1. Remove the air intake and jet pipe blanks. Inspect the intake and jet pipe and ensure that they are perfectly clean. Considerable damage has been caused to engines by such articles as rivets, screws, small tools, etc., being left in the air intakes.
2. Check that the jet pipe is free of kerosine; kerosine in the pipe indicates that the drain system is obstructed. Always trace and rectify such a defect immediately.
3. Ensure that the approved running guard is fitted to the air intake.

Loading the starter breeches

Make sure that the IGNITION and CARTRIDGE STARTING circuit breaker is open and that the internal BATTERY ISOLATION switch is at OFF, then proceed as follows:-

1. Open the breech access panel in the right-hand side of the fuselage.
2. Dealing with each breech in turn, depress the plunger in the head of the breech cap handwheel .....

handwheel and unscrew and remove the cap. If a cartridge case is in the breech, it will be withdrawn with the cap.

3. Depress the two small plungers in the cap to retract the two spring-loaded claws from the cartridge case rim, then remove the case.

Note: The cartridge cases are reclaimable after use: take care therefore not to damage them.

4. Check that there is no loose residue in either breech barrel.

5. Remove the transportation covers from the cartridges then fit a cartridge into each breech cap, pushing it right home so that the two extractor claws clip over the cartridge base.

6. Offer each breech cap, with the attached cartridge, to its corresponding breech, in turn, and screw the cap fully home by hand, finger-tight only. Do not over-tighten, since this may cause jamming and subsequent difficulty in removal after firing.

7. Close the access panel.

Starting system precautions

Always observe the following precautions when dealing with the starting system.

1. Never load a cartridge into a hot breech. If, for test purposes, a series of starts are performed, allow one minute to elapse before reloading the breeches and, if both cartridges are fired subsequently, do not reload for ten minutes; this will allow the starter and breeches to cool. If, after reloading, these two cartridges are then fired immediately, the next interval before reloading must be extended to 20 minutes, to ensure adequate cooling of the starter and breeches.

2. If at any time it is necessary to work on, or make .....

make adjustments to the engine or starter, or to check electrical circuits, make sure that neither of the breeches contains a live cartridge.

3. If a cartridge has failed to fire, or the remnant of a partly burned cartridge has to be removed, take all precautions appropriate to the handling of explosives for its safe disposal.

Checks before entering the cockpit

Observe all precautions listed previously and if the engine is newly installed, verify that the checks called for have been completed satisfactorily; check the main wheel units with the special chocks as described in the Aircraft Maintenance Manual. Ensure that the fuel tanks and engine oil tank have been replenished and that both breeches of the cartridge starter are loaded. Connect the 28 volt D.C. external supply; the location and method of making the connection is given in the Aircraft Maintenance Manual. Ensure that there are no loose objects and paper, etc., in the area in front of the aircraft, that all ground personnel are at a safe distance, and that all fire precautions are being observed.

Caution: Before entering the cockpit, ascertain that the ejection seat firing mechanism is safe (see Warning).

COCKPIT CHECKS BEFORE STARTING

After observing the safety precautions and completing the check detailed previously, set the controls as follows :-

1. Call to the ground crew to switch ON the external electrical supply.

2. Close the following circuit breakers :-

   (1) Bus bar tie-in
   (2) Ignition and cartridge starting
   (3) Fuel booster pump
   (4) Fuel contents
   (5) Fuel low pressure and jet pipe temperature
   (6) Landing gear ground safety
   (7) Hydraulic system (utilities)
   (8) Hydraulic system (flying controls)
   (9) Low Oil pressure and temperature
   (10) Landing gear position
   (11) Fire warning

   Rear right-hand - console.

3. Throttle lever at STOP.

4. FUEL L.P. COCK lever at CLOSED.

   Front left-hand console.

5. FUEL BOOSTER .....

5.	FUEL BOOSTER PUMP switch OFF.	Front left-hand console.
6.	FUEL FLOW PROPORTIONER switch ON.	
7.	Landing gear selector lever at DOWN	Left-hand side instrument panel.
8.	Check landing gear indicator shows LOCKED	
9.	Pull out the emergency wheel brake lever to park the brakes.	Top right-hand side instrument panel.
10.	Test the fire warning circuit for continuity by depressing the FIRE WARNING TEST switch and observing that the indicator lamp comes on.	
11.	Check that the internal battery isolation switch is at ISOLATE; check that BATTERY ISOLATED warning light is on. Note: This indicates that no internal power is on the bus bar.	Instrument panel, lower right-hand side.
12.	Check that the generator switch is at ISOLATE Note: This indicates that the generator is not coupled to the bus bar.	
13.	Check that the oil and fuel low pressure warning lamps are on.	
14.	Cabin pressurisation switch OFF.	Left-hand console.

15. Canopy .....

15. Canopy de-frost switch OFF
16. Cabin ventilation lever OFF

Left-hand console

Starting procedure

When the foregoing checks are completed, start up as follows:-

1. Check the aircraft fuel contents gauges,
2. Move the FUEL L.P. COCK lever to OPEN.
3. Switch ON the FUEL BOOSTER PUMP and check that the fuel low pressure warning light goes out.
4. Move the throttle lever to the START AND FLIGHT IDLE position; this will open the H.P. cock. Do not attempt to start with the throttle set beyond this position.
5. Switch ON the ignition control switch.
6. Depress the firing button; normal engine light up time is between 4 and 6 seconds. The button will be held in automatically by a time switch and solenoid circuit for a period of 30 seconds, during which period the circuit to the booster coils is also maintained to give automatic ignition control.

Note: - Automatic "hold-in" of the starter firing button is a safety precaution and prevents the premature selection and firing of No.2 cartridge which would overload the starter turbine.

7. If the cartridge fires satisfactorily but the engine fails to light-up, investigate the cause before firing the second cartridge.

Warning: - If a cartridge fails to fire or remains partially burned, take all precautions appropriate to handling explosives when disposing of it.

8. When the engine is running steadily, observe the jet pipe temperature. The maximum permissible .....

permissible figure during starting is given in the operating Limitations; if the temperature increases rapidly and it is apparent that it will overshoot the permitted maximum, retract the throttle lever immediately to the STOP position.

9. Check that the low oil pressure warning light is extinguished, denoting normal oil pressure.

Stopping procedure.

1. Retract the throttle lever to the START AND FLIGHT IDLE position and keep it at this postion until the jet pipe temperature and r.p.m. settle to values not exceeding those given in the Operating Limitations
2. Move the throttle lever rearwards to STOP. Flame out will be indicated by a rapid decrease in r.p.m. and jet pipe temperature.
3. When the engine ceases to rotate, move the FUEL L.P. COCK to CLOSED.

Note- The practice of waiting for the engine to stop before closing the FUEL L.P.COCK maintains pump lubrication, and prevents cavitation in the fuel pump which might other-wise initiate air in the system and cause dificulty during subsequent starting.

4. Switch OFF the FUEL BOOSTER PUMP.
5. Fit the air intake and jet pipe blanks as soon as possible after stopping the engine.

Ground test after installation.

1. Start the engine, as described previously.
2. Immediately the engine starts, note that the oil and fuel low pressure warning lights go out, then check that the hydraulic pressure rises rapidly to 3,500 p.s.i. and, (when the cut-out operates), settles to 3,300 p.s.i.
3. Open up to 4,000 r.p.m. and check that the generator failure warning light is extinguished.
4. Increase the r.p.m. to 4,500 and check that the voltmeter reading increases, thus indicating that the generator is charging.

5. check that.....

5. Check that the r.p.m. and jet pipe temperature at maximum continous, intermediate and at take-off ratings agree with the Operating Limitations. Check that the fuel and oil flow pressure warning lights remain extinguished at each rating.
6. Throttle back to START AND IDLE and check that the r.p.m. does not exceed those quoted in the Operating Limitations.
7. Perform two timed acceleration tests in the following manner. Move the throttle lever to obtain 4,000 r.p.m. then "slam" the throttle lever open to the take-off position and check the time taken for the engine to attain take-off r.p.m. this should not exceed five seconds.
8. Throttle back to START AND IDLE and when the r.p.m and jet pipe temperature settle, move the throttle lever rearwards to STOP.

Note- If the cockpit pressurising system is to be tested, the instructions for this are given in the Aircraft Ma intenance Manual.

Routine ground test.

This check should be performed by an authorised member of the ground staff as a routine check on engine serviceably.

1. Start the engine as detailed previously.
2. Verify that the oil and fuel low pressure warning lights are extinguised, then open up to the maximum continuous rating and again check that the fuel pressure warning light remains extinguished. This establishes that the aircraft fuel pump is functioning satisfactorily.
3. Run the engine at the take-off rating for 10 seconds and check that the jet pipe temperature and r.p.m. comply with the figures in the Operating Limitations.
4. Close the throttle and stop the engine as detailed previously.

EMERGENCY

Immediate Hot Relight

On flame out, immediately press and hold the IGNIT button, and move the throttle back to FLIGHT IDLING. A successful hot relight will be indicated by J.P.T. and r.p.m. rising together. When normal idling r.p.m. above 40% are reached, the throttle can be opened up to the required power.

Unsuccessful Relight

If the J.P.T. reaches 650°C (Nimonic 90) or 700°C (Nimonic 100 or 105) and goes on rising, or if no relight occurs, proceed as follows:-

1. Release the IGNIT button
2. Retard the throttle to STOP
3. If height is 30,000 ft. or below:-
   Reduce air speed to 150 kts. and after 20 seconds attempt a COLD RELIGHT.
4. If height is above 30,000ft:-
   Switch fuel booster pump off. Descend to 30,000ft. and attempt a COLD RELIGHT.

NOTE:

Before attempting another relight, fly the aircraft in nose up attitude for as long as is convenient for ensuring the best conditions for draining unburnt fuel.

Cold Relight

Height.....	30,000 ft. or below
Maximum airspeed....	150 kts for 15% r.p.m. between 30,000 ft and 25,000 ft. 19 kts below 25,000 ft.
Battery Switch.....	ON
Ignition Switch.....	NORMAL
Fuel Booster Pump Switch.....	ON
Fuel L.P. Cock.....	OPEN
Throttle.....	STOP
IGNIT Button.....	Press for two seconds

then.....

Then:-

Continue pressing the IGNIT Button and move the throttle slowly to the FLIGHT IDLING gate. If there is much backlash in the throttle control it may be necessary to continue the slow opening up to 1" beyond IDLING.

Release the IGNIT button when R.P.M. have increased smoothly above 40%.

Inadvertent Over-temperature

Pending further research into the effect of excessive jet pipe temperature during starting, normal running and relighting in the air, observe the following limiting conditions:-

The limiting conditions for an engine depends upon the turbine blade material, changes of which were introduced by Mods: OT.129 and 147.

Mod: O.T.129, replaced the existing turbine blades of NIMONIC 90 with blades of NIMONIC 100.

MOD: O.T.147 replaced the existing turbine blades of NIMONIC 100 with blades of NIMONIC 105.

Starting

1. Abandon the start if a J.P.T. of 650°C (NIMONIC 90 blades) or 700°C (NIMONIC 100 or 105 blades) is exceeded.
2. Reject the engine for investigation at a repair base if the J.P.T. rises above 700°C (NIMONIC) 90 blades) or 800°C (NIMONIC 100 or 105) after an abandoned start.
3. On engines which have exceeded the limits of (1) but not of (2) carry out the checks laid down on INSPECTION PROCEDURE.

Inspection Procedure

1. Examine the turbine blades for cracks (no cracks are permissible).
2. Check the turbine blade tip clearance (minimum clearance is .055 in, with no evidence of blade rub)
3. Examine the exhaust annulus for cracks and/or distortion.

ENGINE FAILS TO START

- Engine does not rotate.
  - No discharge of gas from starter exhaust port after full cartridge firing procedure has been completed.
    - Electrical defect.
      - Wait at least one minute and unload both cartridges; observe warning in starting procedure.
        Check:-
        1. Current is reaching spring blade contact in breech.
        2. Electrical continuity of breech cap between slip ring and firing pin.
        3. That spring blade contact and slip ring are clean.
  - Cartridge fires with gas discharge from exhaust port.
    - Starter jaw stuck in retracted position. Engine internal failure.
      - Check engine for freedom of rotation and, if satisfactory, remove E.C.U. and fit replacement starter.
    - Pressure relief valve stuck open.
      - Change the breech.
- Engine rotates.
  - Engine will not reach full motoring speed.
    - Faulty (slow burning) cartridge.
    - Partial engine seizure.
      - Check engine for freedom of rotation. If satisfactory, select and fire second cartridge. If fault persists, remove E.C.U. and change starter.

- Engine rotates (Continued).
  - Engine reaches full motoring speed.
    - Igniter plugs not sparking.
      - L.T. input low. — Check aircraft Voltmeter reading. Change battery if voltage low.
      - Defective H.T. lead connections. — Check condition and security.
      - Igniter plugs defective. — Dry off or change according to condition.
      - H.T. leads defective. — Fit new leads.
      - Defective circuit or booster coils. — Check.
    - Fuel pump not functioning.
      - Fuel pump drive failure. — Fit new quill shaft and pump. Return the pump for investigation.
      - Fuel pump defective. — Change pump.

ENGINE FAILS TO START - Continued

- Engine rotates (Continued).
  - Engine reaches full motoring speed (continued).
    - Low pressure fuel supply failure. (Shown by warning lamp).
      - Lack of fuel. — Check fuel tank contents.
      - Aircraft fuel pump inoperative. — Check pump and electrical circuit.
      - Obstruction in supply line. — Check pipe line.
      - Low pressure cock closed. — Check operation.
      - Choked engine fuel filter. — Change element.
    - Throttle valve not opening.
      - High pressure cock jammed. — Change combined control unit.
      - Controls incorrectly set. — Adjust.
    - Excessive fuel from jet pipe.
      - Flow distributor valve stuck causing main burners to open. — Change combined control unit.

POOR STARTING

- Engine lights up but fades out.
  - Throttle valve not open sufficiently. — Incorrect adjustment. — Adjust correctly.
  - Restricted fuel supply. — Check fuel supply system.
  - Air lock in fuel system. — Bleed system.
  - Engine fuel pump not functioning.
    - Fuel pump drive failure. — Change pump and quill shaft.
    - Fuel pump defective. — Change pump.
  - Engine fuel pump operating.
    - Defective fuel delivery system. — Check system for leaks or restrictions.
    - Defective barometric pressure control in combined control unit. — Isolate barometric pressure control and check. — If starting is satisfactory when the barometric pressure control is isolated, change combined control unit.

POOR STARTING - Continued

- Engine lights up but fades out (continued).
  - Engine fuel pump operating (continued).
    - Defective air/fuel ratio control. — Isolate air/fuel ratio control. — If starting is satisfactory when the air/fuel ratio control is isolated, change air/fuel ratio control.
    - Fuel pump servo system defective. — Change pump.
    - Defective flow distributor. — Change combined control unit.
- High jet pipe temperature.
  - Throttle too far open.
    - Throttle lever adjustment incorrect. — Re-adjust.
    - Incorrect starting procedure. — Adopt procedure specified.
  - Combustion chamber and exhaust cone drains obstructed or drain valve sticking. — Remove drain pipe and clear obstruction. Check and rectify drain valve.

INABILITY TO OBTAIN TAKE-OFF R.P.M.

- Engine in good mechanical condition.
  - Throttle valve not opening fully.
    - Throttle control system not operating correctly. — Check engine control lever setting. If satisfactory, check control run from cockpit.
    - Incorrect adjustment. Not travelling full range. — Adjust control lever.
    - Flow distributor incorrectly set.
    - Barometric pressure control incorrectly set.
      - (Flow distributor incorrectly set / Barometric pressure control incorrectly set) — Change combined control unit.
    - Air/fuel ratio control incorrectly set. — Change air/fuel ratio control.
    - Main fuel supply to pump restricted. Indicated by low pressure warning lamp.
      - Engine filter choked. — Change element.
      - Low pressure fuel cock not fully open. — Check control setting.

INABILITY TO OBTAIN TAKE-OFF R.P.M. - Continued

Engine in good mechanical condition (continued).	Fuel pump overspeed governor setting too low.	Indicated by excessive ineffective throttle lever movement at full throttle end of range.	Adjust overspeed governor.
	Fuel pump defective or pump stroke setting too low.		Change fuel pump.
	Leakage of air from cabin and fuel pressurising systems.	Defective seals.	Check.

ENGINE RUNNING FAULTS

High jet pipe temperatures.	Engine internal failure.	Change E.C.U.
Engine stalls when throttle is opened accompanied by sudden increase in jet pipe temperature.	Defective air/fuel ratio control.	Change air/fuel ratio control.
Poor acceleration.	Restricted fuel supply.	Check fuel low pressure and high pressure systems for cause.
	Air fuel/ratio control incorrectly set.	Change air/fuel ratio control.
Engine will not respond to control operation.	Combined control unit defective. Fuel pump defective.	Change combined control unit and/or fuel pump.
Engine fails to stop when throttle lever is moved to H.P. OFF.	Incorrect control setting.	Adjust controls.
	Defective combined control unit.	Change combined control unit and/or fuel pump.

MECHANICAL FAULTS

Low oil pressure (shown by low pressure-warning lamp).	Pressure switch or indicator lamp defective.	Verify by checking pressure with master gauge. Check indicator lamp and change if necessary.
	Obstruction in feed to oil pump.	Check pipe for cleanliness.
	Oil pressure relief valve jammed open.	Remove and service valve assembly.
	Internal engine failure.	Change E.C.U.
Engine vibration.	Engine mounting slack.	Check installation.
	Damaged compressor or turbine. This is likely only if a foreign body has passed through the engine and will be accompanied by high jet pipe temperature.	Change E.C.U.

SECTION 8
CONTENTS

1 FUEL INHIBITING

2 STORAGE

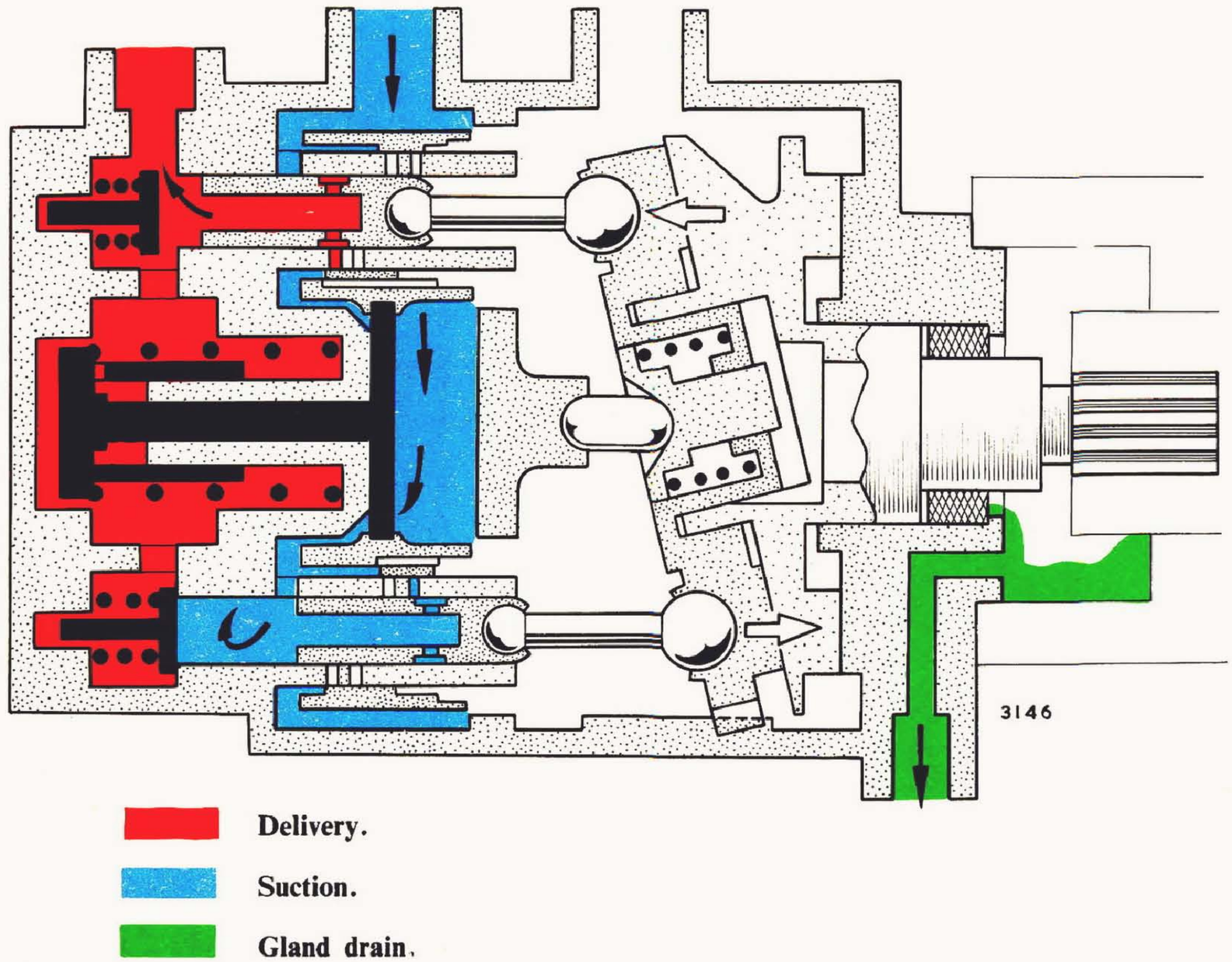

Messier Hydraulic Pump operating diagram—output under pressure to accumulator

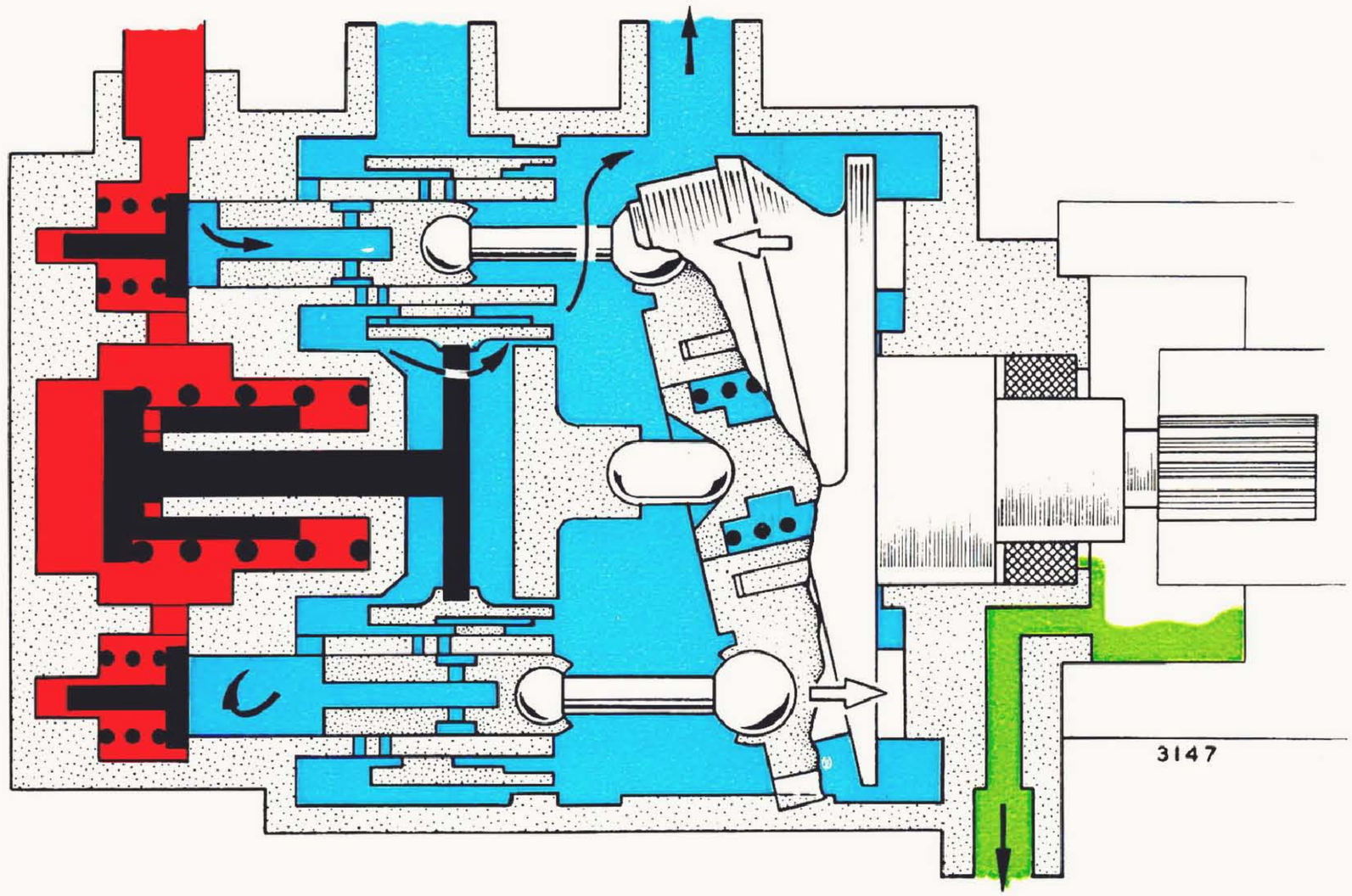

Delivery.

Self-regulating return.

Gland drain.

Messier Hydraulic Pump operating diagram—self-regulating operation at maximum pressure

KEY

1. Shock absorber.
2. " O " seal.
3. Mounting flange.
4. Distance sleeve.
5. Field coil pole piece.
6. Tantalum capacitor.
7. Cover.
8. Terminal block.
9. Spring-loaded toggle arm.
10. Brush.
11. Commutator end frame.
12. Commutator end bearing.
13. Cap.
14. Shock absorber adjuster nut.
15. Commutator.
16. Armature.
17. Field coil inter-pole piece.
18. Frame.
19. Screen.
20. Armature shaft.
21. Torque shaft.
22. Drive end bearing.

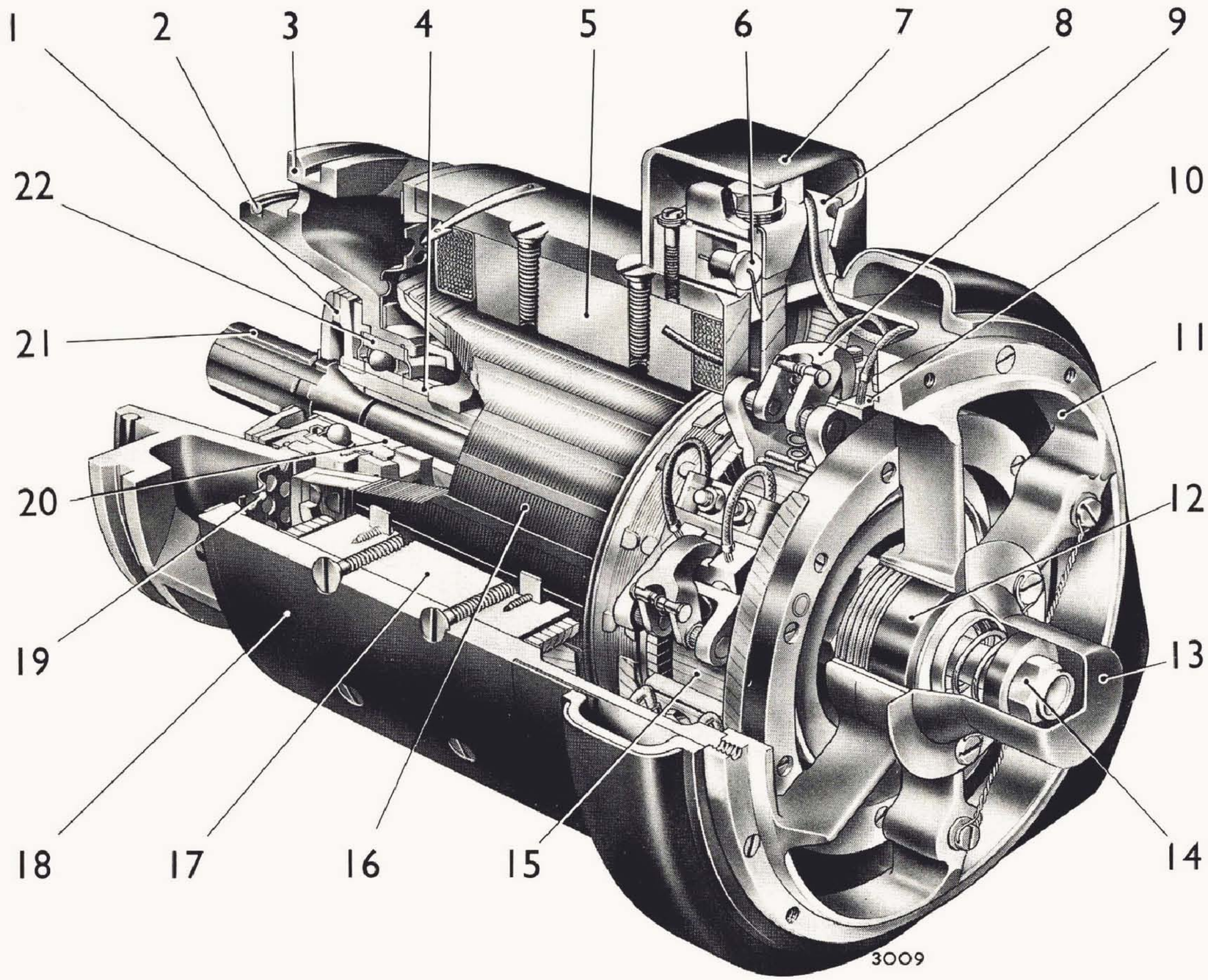

Section view of Labinal generator

BRISTOL SIDDELEY

AERO ENGINE SCHOOL